US00D614562S

(12) United States Design Patent

Flaherty et al.

(10) Patent No.: US D614,562 S
(45) Date of Patent: ** Apr. 27, 2010

(54) **BICYCLE CARRIER RACK**

(75) Inventors: **Joseph Flaherty**, Prospect, CT (US); **Joe Settelmayer**, McKinleyville, CA (US)

(73) Assignee: **Thule Sweden AB**, Hillerstorp (SE)

(**) Term: **14 Years**

(21) Appl. No.: **29/352,029**

(22) Filed: **Dec. 15, 2009**

Related U.S. Application Data

(63) Continuation of application No. 29/342,758, filed on Aug. 31, 2009, now Pat. No. Des. 608,723.

(51) **LOC (9) Cl.** **12-11**
(52) **U.S. Cl.** **D12/408**
(58) **Field of Classification Search** D12/406–408; 224/42.11, 515, 545, 519, 495, 502, 505, 224/506, 522, 535–537, 548, 552, 553, 567, 224/572, 324, 935, 421, 425–427, 496, 497, 224/499, 490–493, 403, 924, 533; 280/288.4, 280/304.5
See application file for complete search history.

(56) **References Cited**

U.S. PATENT DOCUMENTS

D308,846	S *	6/1990	Eckhart	D12/408
D337,087	S *	7/1993	Peterman et al.	D12/408
5,259,542	A *	11/1993	Newbold et al.	224/324
D378,289	S *	3/1997	Lundgren	D12/412
5,775,555	A *	7/1998	Bloemer et al.	224/531
D447,997	S *	9/2001	Ferman et al.	D12/408
6,286,738	B1 *	9/2001	Robins et al.	224/314
6,616,023	B1 *	9/2003	Dahl et al.	224/537
6,988,645	B1 *	1/2006	Nusbaum et al.	224/519
7,000,814	B2 *	2/2006	Wang	224/520
7,055,725	B1 *	6/2006	Kolda	224/505
7,261,228	B2 *	8/2007	Prescott et al.	224/502
D602,420	S *	10/2009	Kuschmeader et al.	D12/408
2007/0057001	A1 *	3/2007	Wang	224/536

* cited by examiner

Primary Examiner—Philip S Hyder
Assistant Examiner—Linda G. Brooks
(74) *Attorney, Agent, or Firm*—Novak Druce + Quigg LLP

(57) **CLAIM**

We claim the ornamental design for a bicycle carrier rack, as shown and described.

DESCRIPTION

FIG. **1** is a perspective view of a bicycle carrier rack;

FIG. **2** is a right side elevational view thereof;

FIG. **3** is a left side elevational view thereof;

FIG. **4** is a top plan view thereof;

FIG. **5** is bottom plan view of the left end thereof;

FIG. **6** is a front elevational view thereof; and,

FIG. **7** is a rear elevational view thereof.

Broken lines above the hitch mount portion represent an unclaimed boundary between claimed and unclaimed portions of the design and do not form a part of the claimed design. The other broken lines in the figures illustrate environmental structure and do not form a part of the claimed design.

1 Claim, 7 Drawing Sheets

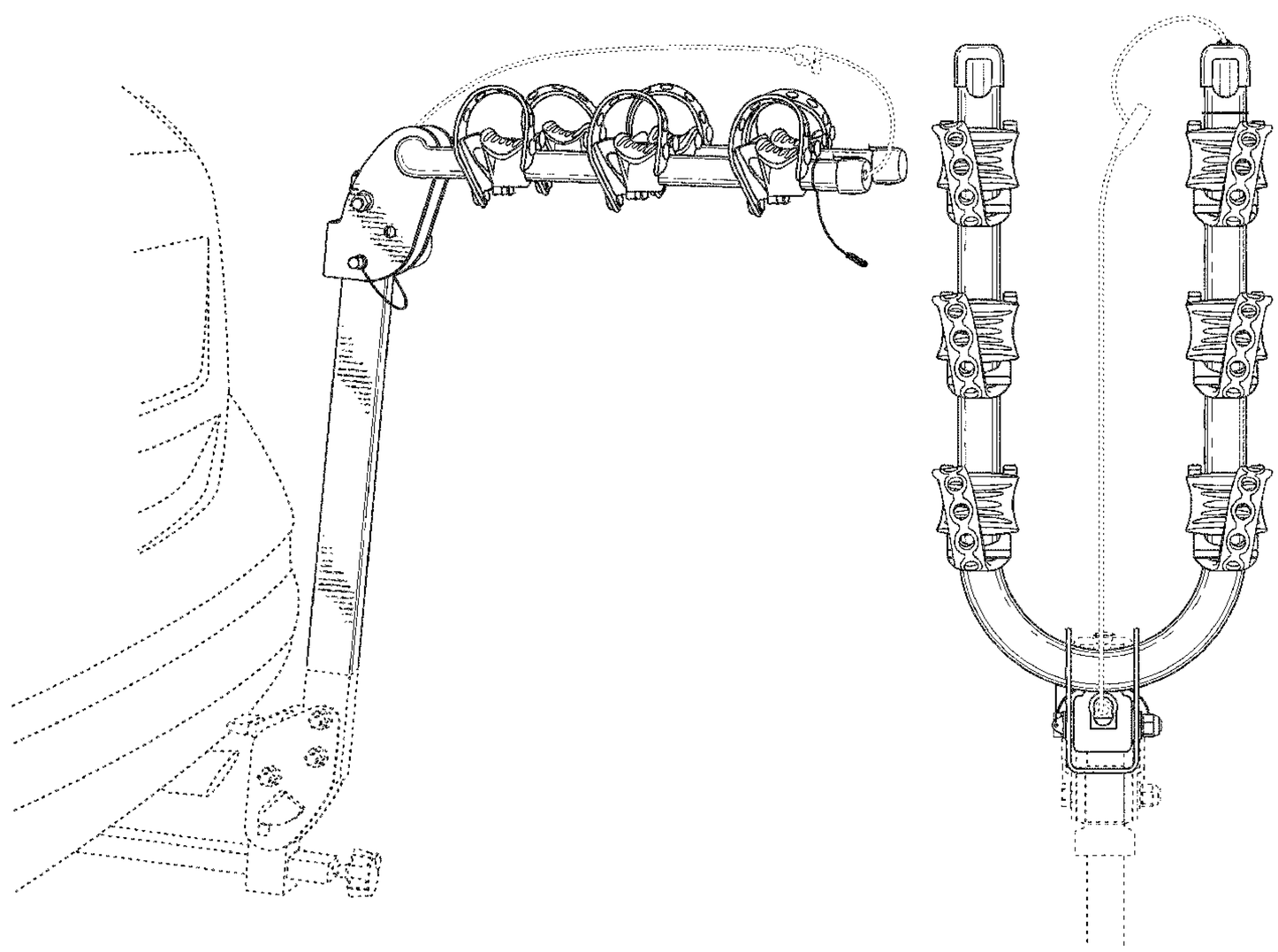

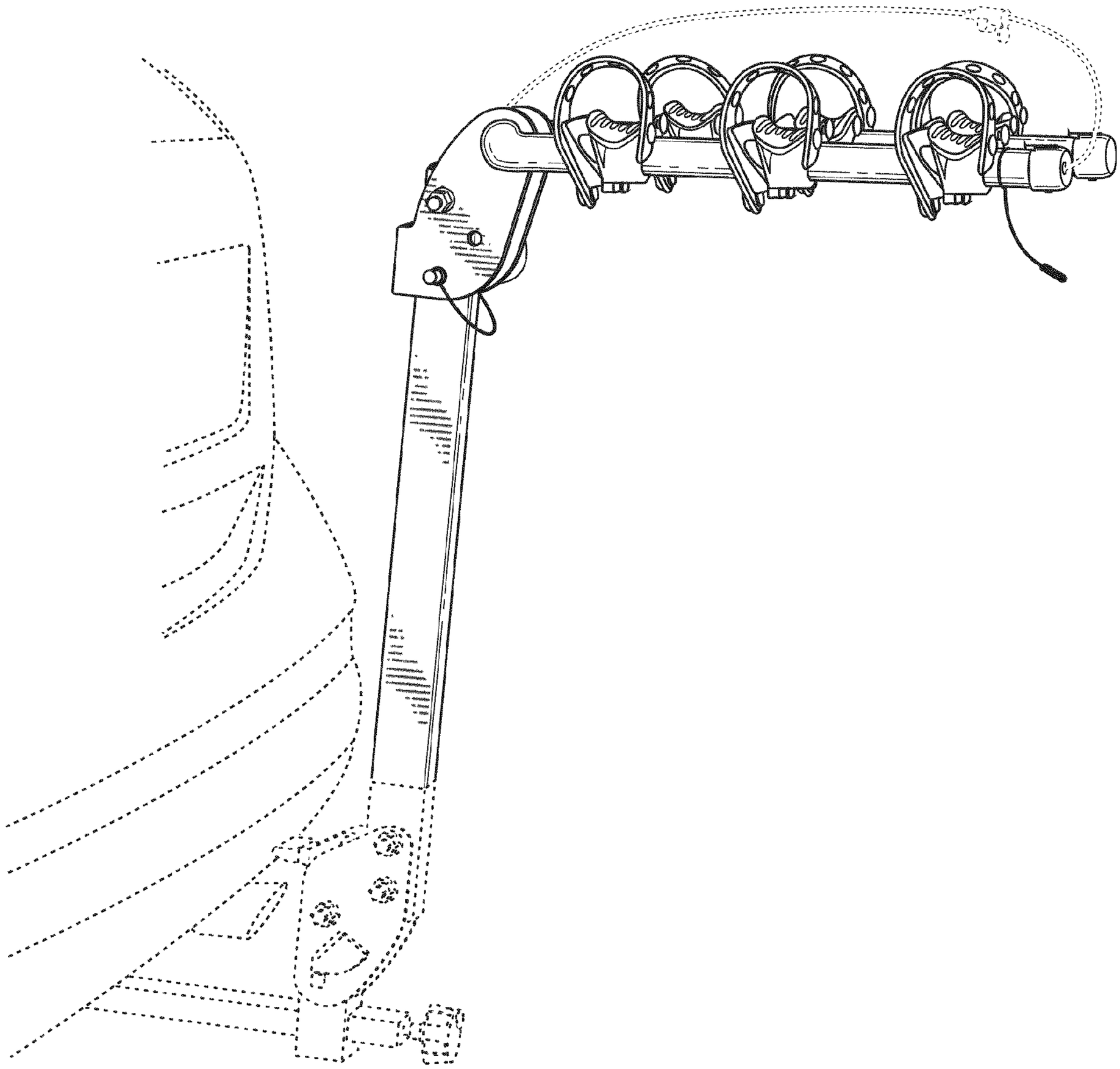

FIG. 1

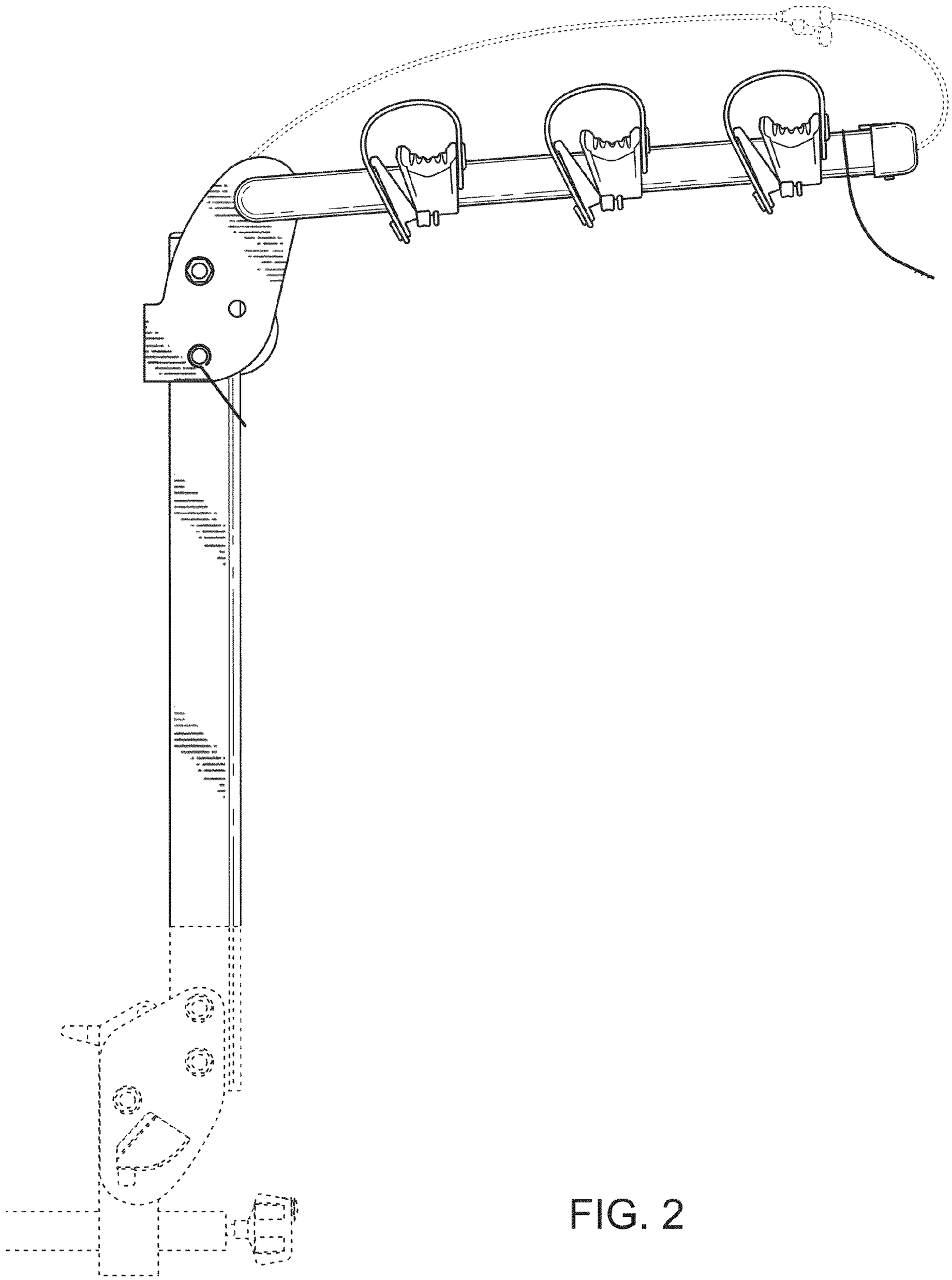

FIG. 2

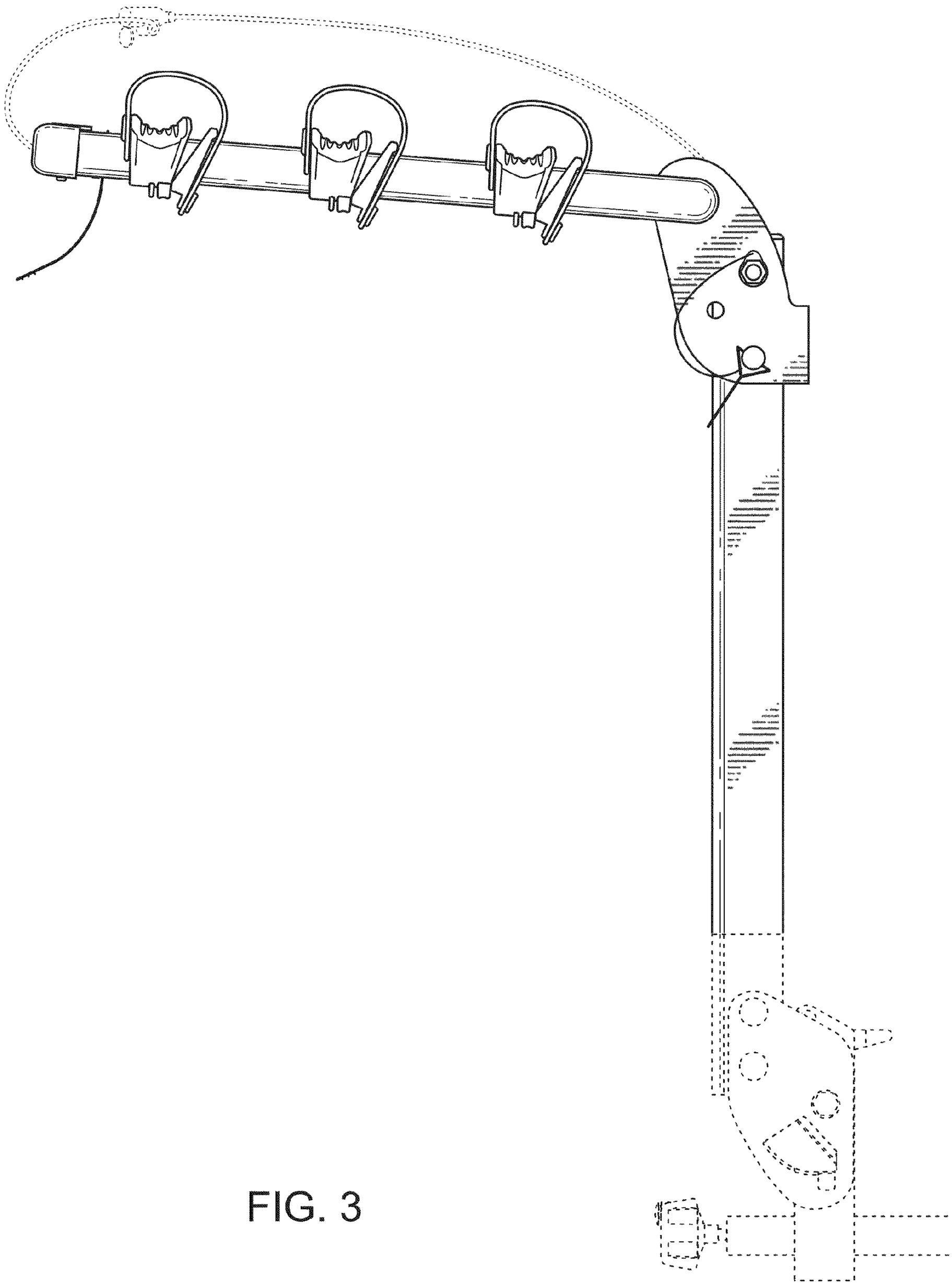

FIG. 3

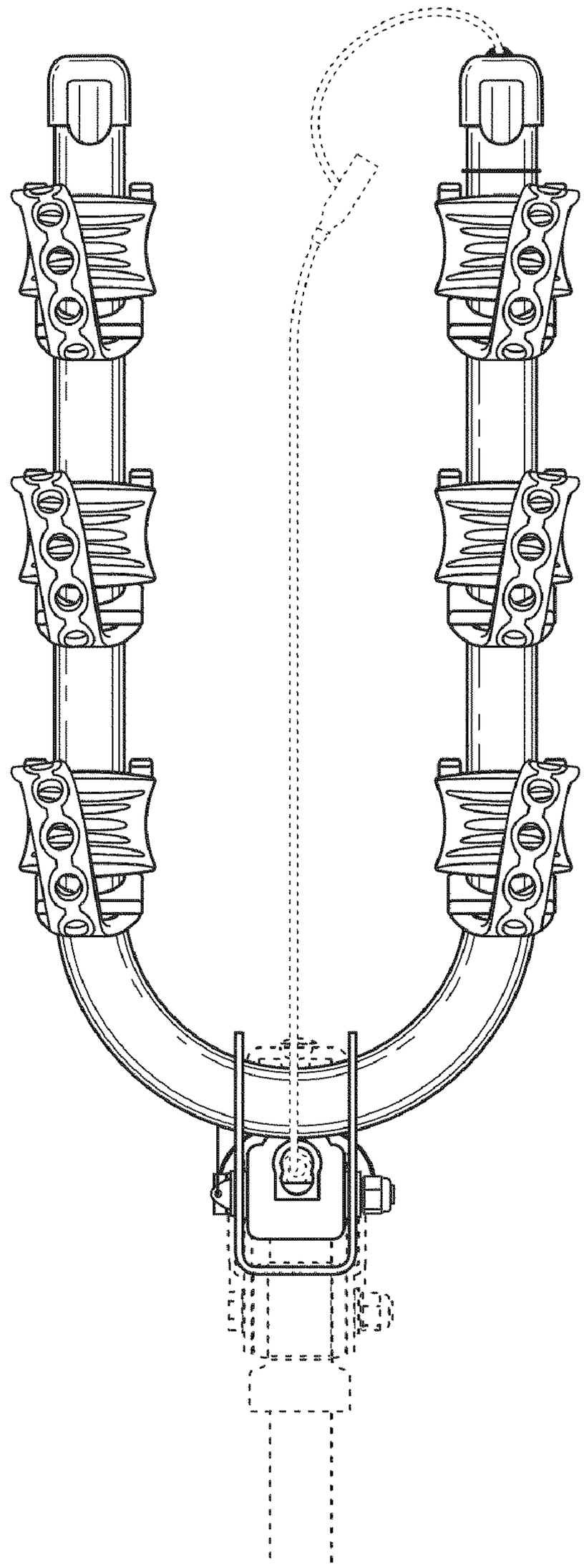

FIG. 4

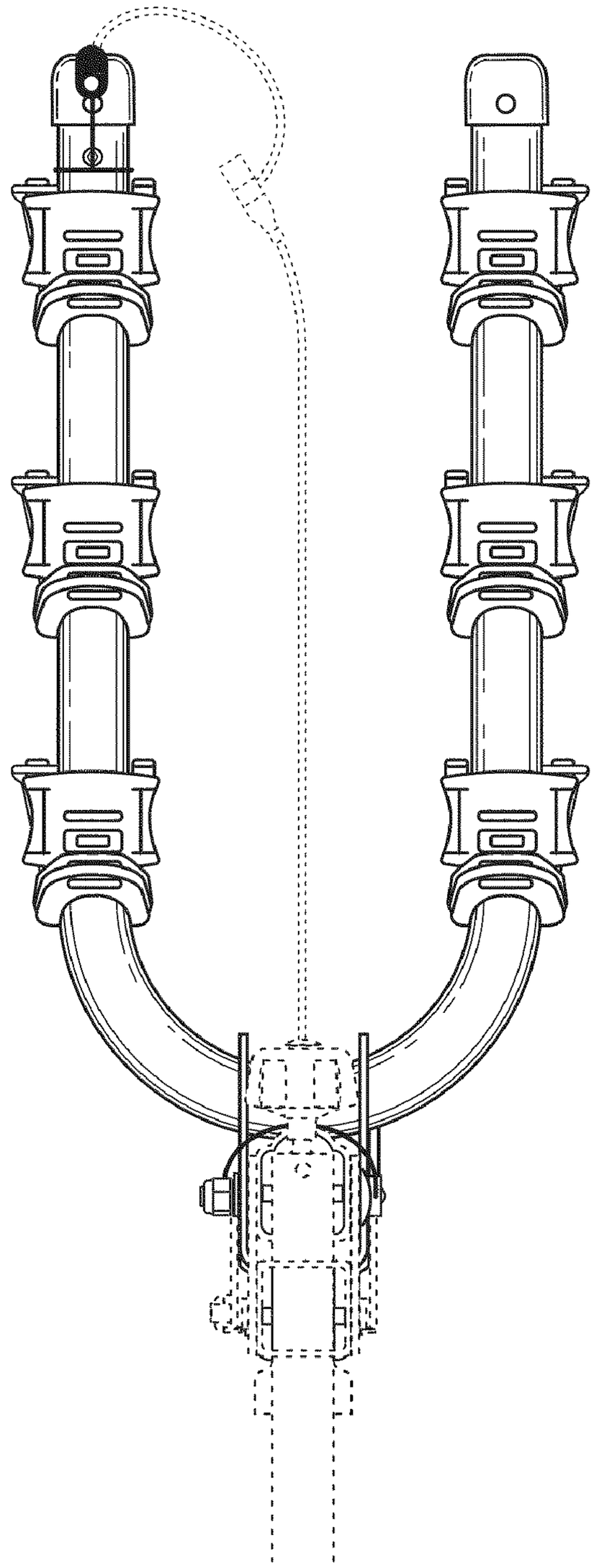

FIG. 5

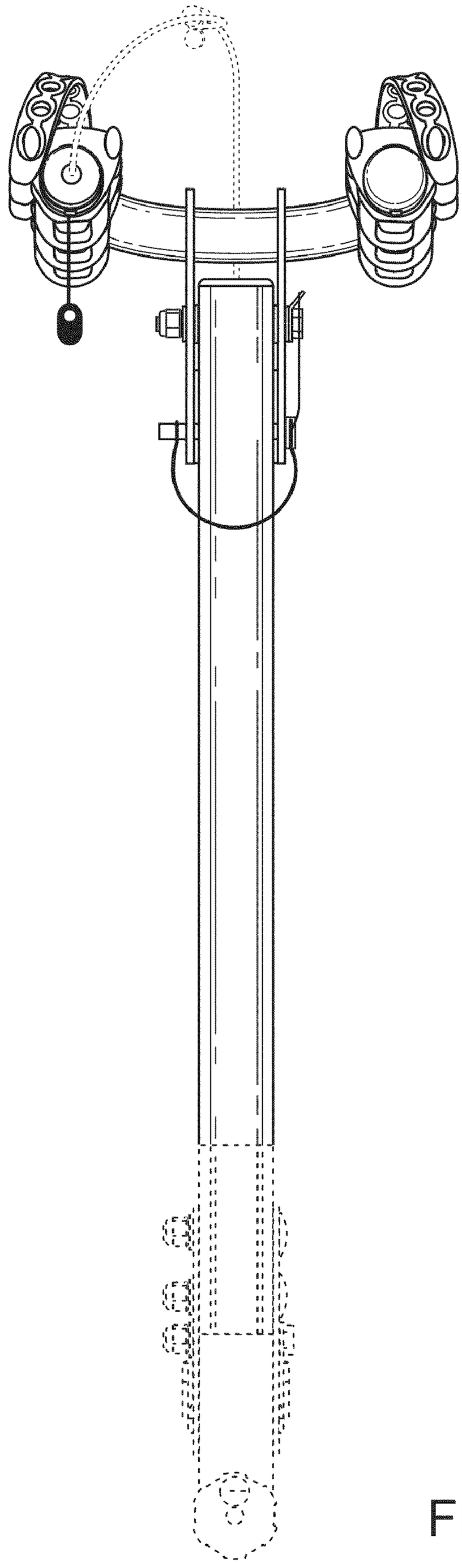

FIG. 6

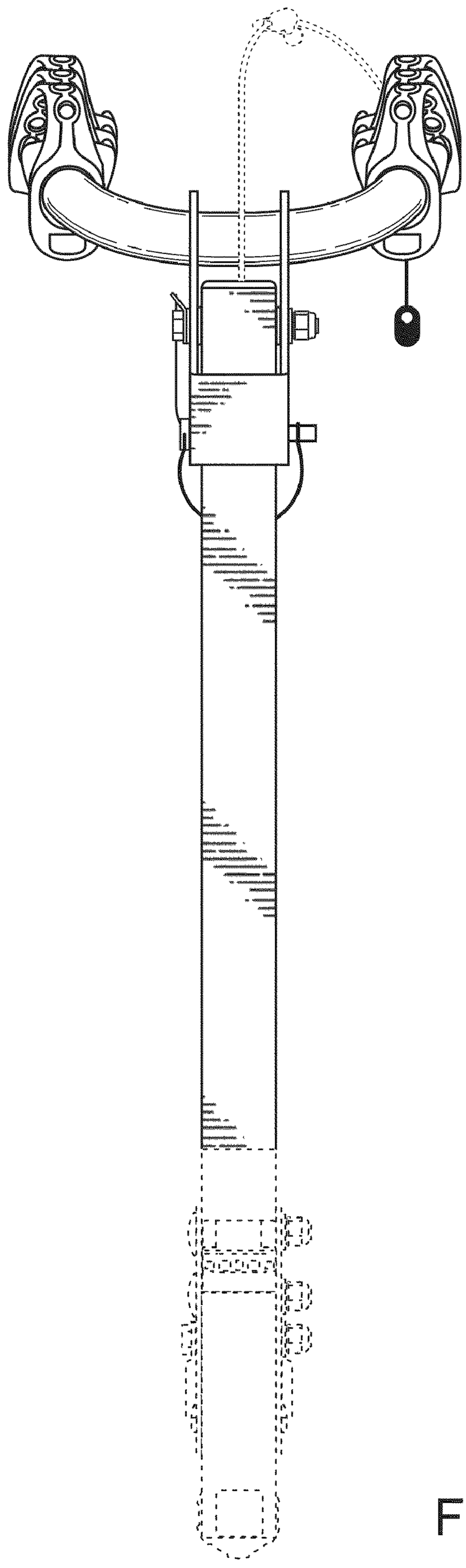

FIG. 7