US00D611924S

(12) United States Design Patent
Ou et al.

(10) Patent No.: US D611,924 S
(45) Date of Patent: ** Mar. 16, 2010

(54) **MOBILE COMMUNICATION DEVICE**

(75) Inventors: **Shih-Shun Ou**, Taoyuan County (TW); **Hung-Yu Chen**, Taoyuan County (TW); **Meng-Sheng Chiang**, Taoyuan County (TW)

(73) Assignee: **HTC Corporation**, Taoyuan County (TW)

(**) Term: **14 Years**

(21) Appl. No.: **29/337,597**

(22) Filed: **May 26, 2009**

(30) **Foreign Application Priority Data**

Jan. 23, 2009 (TW) 98300341

(51) **LOC (9) Cl.** **14-03**
(52) **U.S. Cl.** ..... **D14/138 AD**
(58) **Field of Classification Search** ..... D14/138 R, D14/138 AD, 138 AC, 138 C, 138 G, 191, D14/203.1–203.8, 496, 138 AA, 138 AB, D14/247–248, 137, 147, 218, 341–347; D10/65, D10/78, 104; D13/168; D18/7; 455/566, 455/575.1, 575.3

See application file for complete search history.

(56) **References Cited**

U.S. PATENT DOCUMENTS

D530,699 S * 10/2006 Lee et al. ..... D14/138 G
D555,134 S * 11/2007 Sung et al. ..... D14/138 AC
7,298,610 B2 * 11/2007 Kim et al. 361/679.55
D558,720 S * 1/2008 Lee et al. ..... D14/138 AD
D565,597 S * 4/2008 Kim D14/496
D571,234 S * 6/2008 Reeson et al. D10/65
D572,695 S * 7/2008 Tu ..... D14/138 AD
D577,298 S * 9/2008 Reeson et al. D10/65
D577,704 S * 9/2008 Park et al. ..... D14/138 AD
D578,098 S * 10/2008 Oh ..... D14/138 AD
D578,503 S * 10/2008 Shin et al. ..... D14/138 AD
D580,396 S * 11/2008 Kang ..... D14/138 G
D580,929 S * 11/2008 Kao et al. D14/346
D580,930 S * 11/2008 Chien et al. D14/346

(Continued)

OTHER PUBLICATIONS

HTC Touch Pro2, announced Feb. 2009, [online], [retrieved on Feb. 20, 2009]. Retrieved from Internet ,<URL: http://www.gsmarena.com>.*

(Continued)

Primary Examiner—Jeffrey D Asch
Assistant Examiner—Bridget L Eland
(74) *Attorney, Agent, or Firm*—Jianq Chyun IP Office

(57) **CLAIM**

The ornamental design for a mobile communication device, as shown and described.

DESCRIPTION

FIG. **1** is a perspective view of a mobile communication device showing our new design in a tilt state.

FIG. **2** is a front view thereof.

FIG. **3** is a rear view thereof.

FIG. **4** is a left side view thereof.

FIG. **5** is a right side view thereof.

FIG. **6** is a top view thereof.

FIG. **7** is a bottom view thereof.

FIG. **8** is another perspective view thereof in an open state; and,

FIG. **9** is still another perspective view thereof in a close state.

The broken lines immediately adjacent the shaded areas represent the bounds of the claimed design while all other broken lines are directed to environment and are for illustrative purposes only; the broken lines form no part of the claimed design.

1 Claim, 9 Drawing Sheets

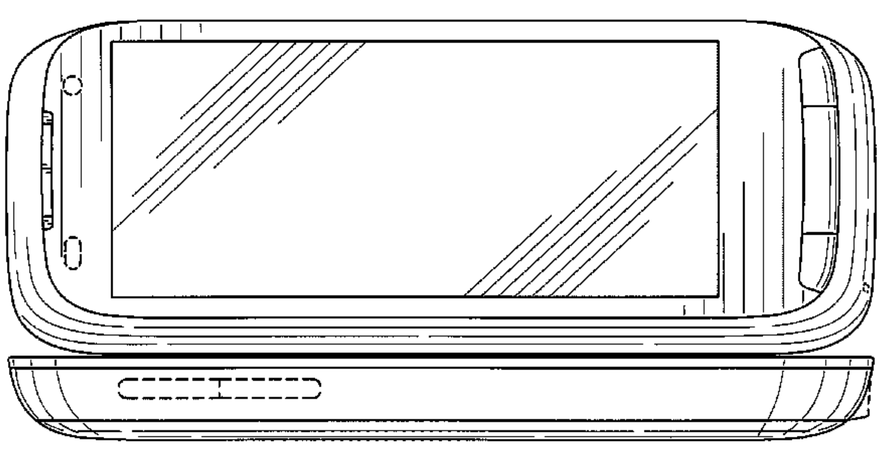

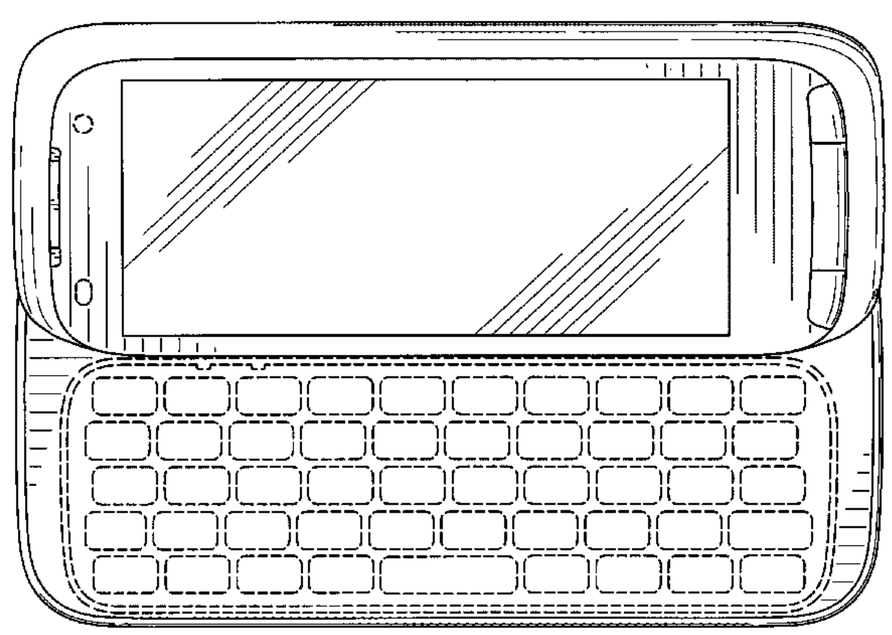

U.S. PATENT DOCUMENTS

D581,894	S	*	12/2008	Kim	D14/138 G
D585,411	S	*	1/2009	Eaton	D14/138 G
D588,085	S	*	3/2009	Lin	D14/138 AD
D589,924	S	*	4/2009	Jung et al.	D14/138 AD
D596,608	S	*	7/2009	Kim et al.	D14/138 G
D598,447	S	*	8/2009	Hamada et al.	D14/345
D602,901	S	*	10/2009	Eguchi et al.	D14/138 G
2002/0077161	A1	*	6/2002	Eromaki	455/575
2007/0254730	A1	*	11/2007	Kim et al.	455/575.4
2007/0259702	A1	*	11/2007	Kemppinen	455/575.4
2008/0009330	A1	*	1/2008	Jung et al.	455/575.3
2008/0274776	A1	*	11/2008	Cho et al.	455/575.4

OTHER PUBLICATIONS

Nokia N97, announced Nov. 2008, [online], [retrieved on Dec. 12, 2008]. Retrieved from Internet ,<URL: http://www.gsmarena.com>.*

Nokia N97 mini, announced Sep. 2009, [online], [retrieved on Sep. 4, 2009]. Retrieved from Internet ,<URL: http://www.gsmarena.com>.*

02 XDA Stellar, announced Nov. 2007, [online], [retrieved on Dec. 13, 2007 & Feb. 6, 2008]. Retrieved from Internet ,<URL: http://www.gsmarena.com>.*

T-Mobile MDA Vario V, announced Feb. 2009, [online], [retrieved on Jun. 12, 2009]. Retrieved from Internet ,<URL: http://www.gsmarena.com>.*

* cited by examiner

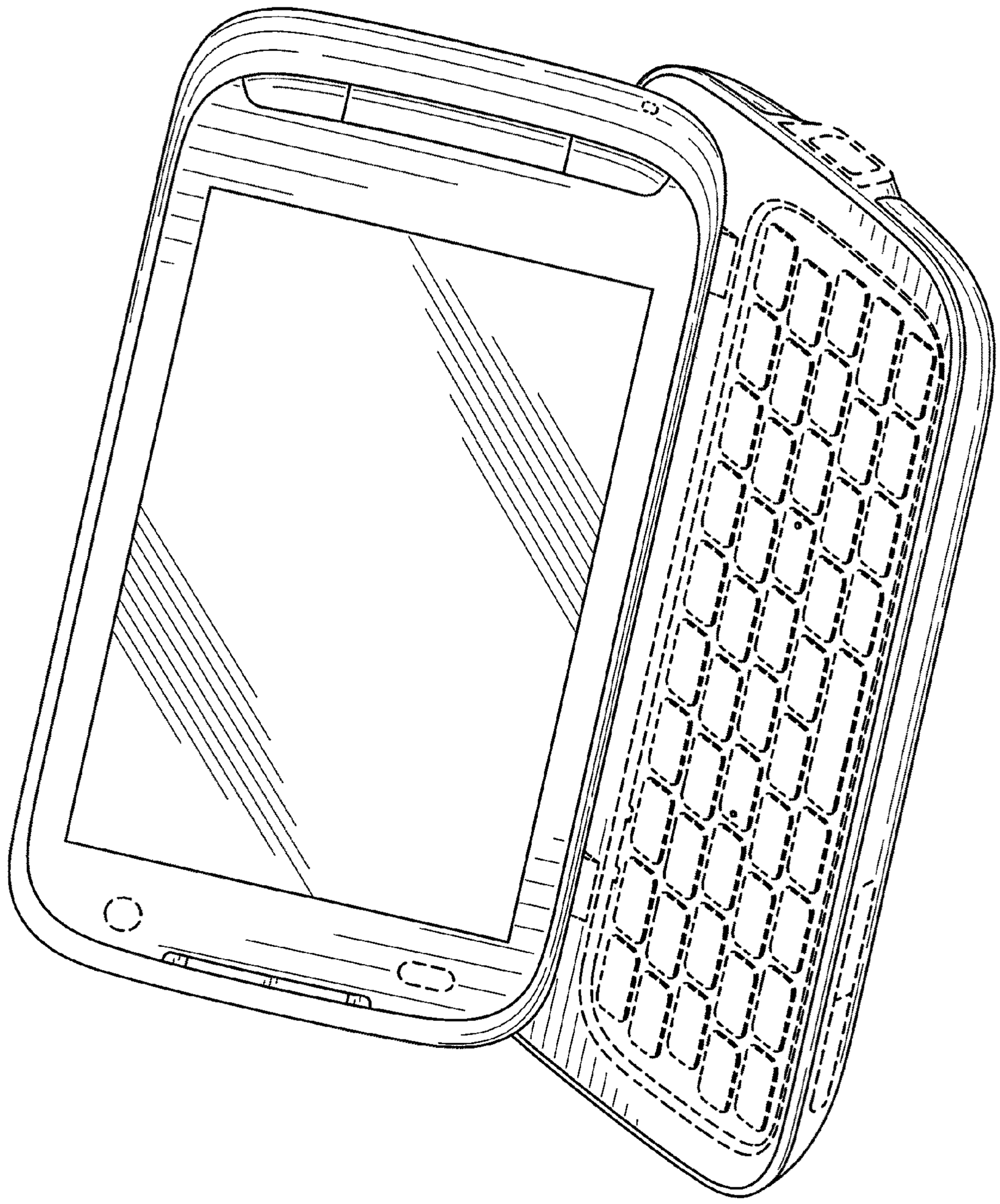

FIG. 1

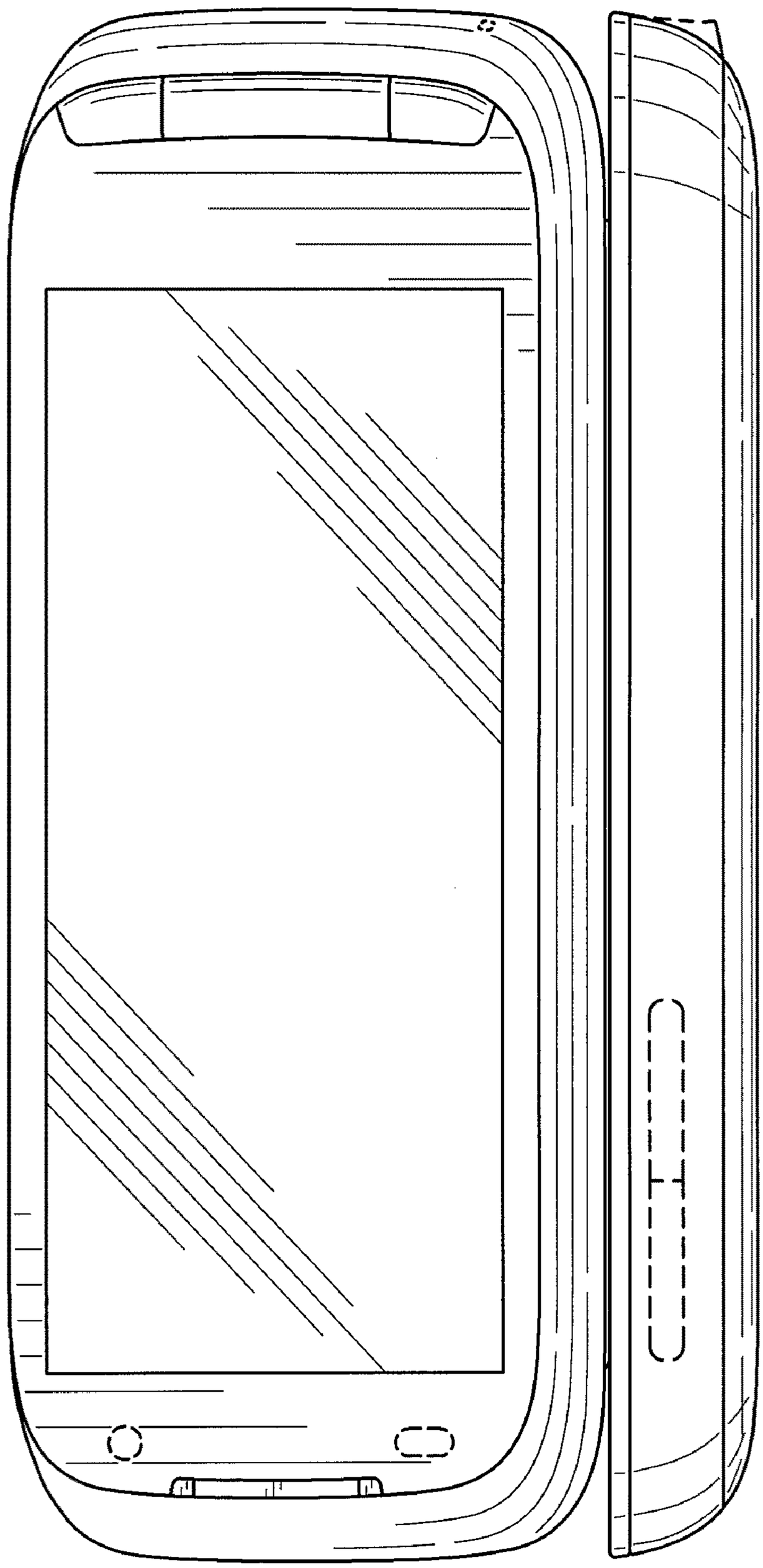

FIG. 2

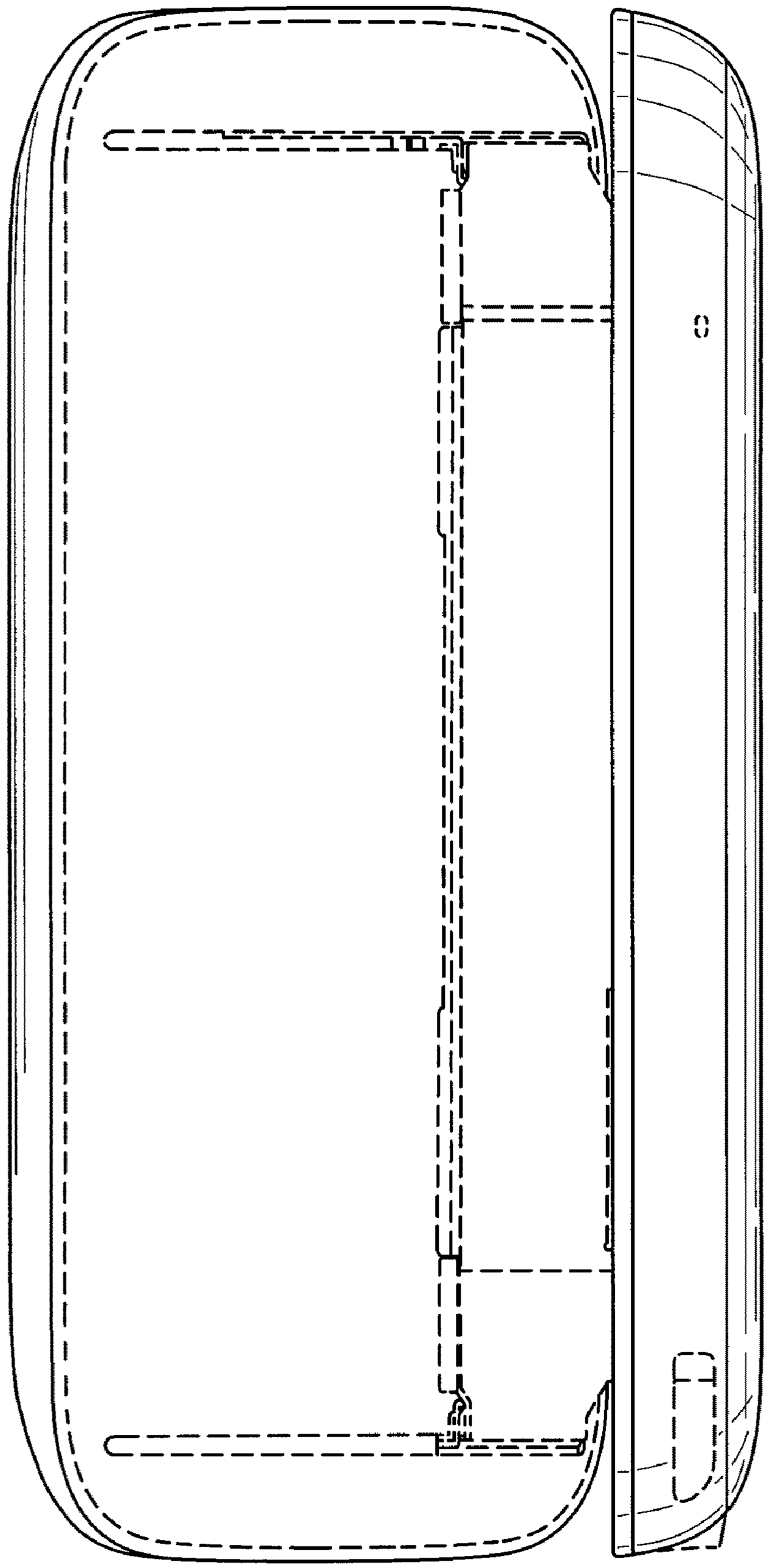

FIG. 3

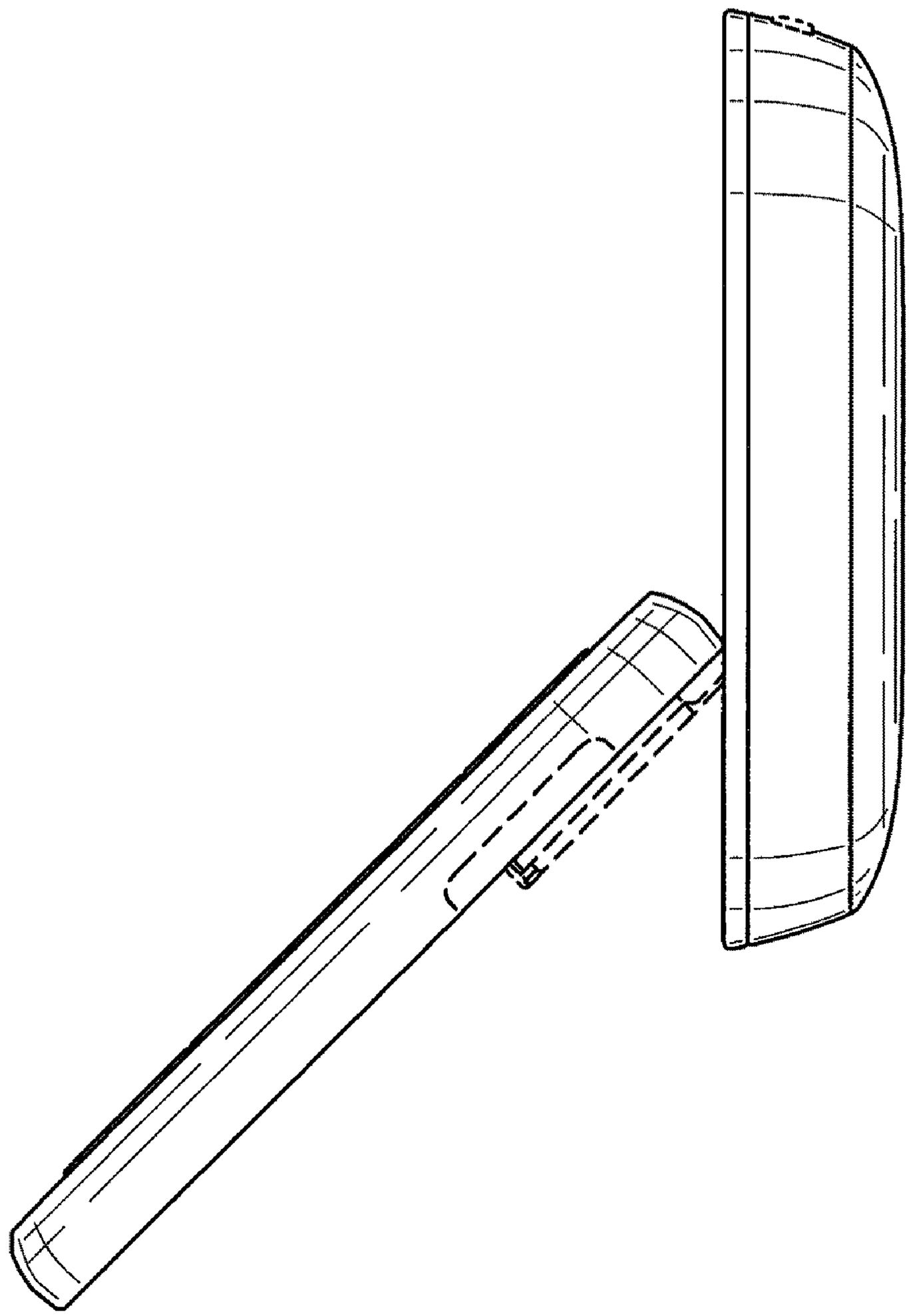

FIG. 4

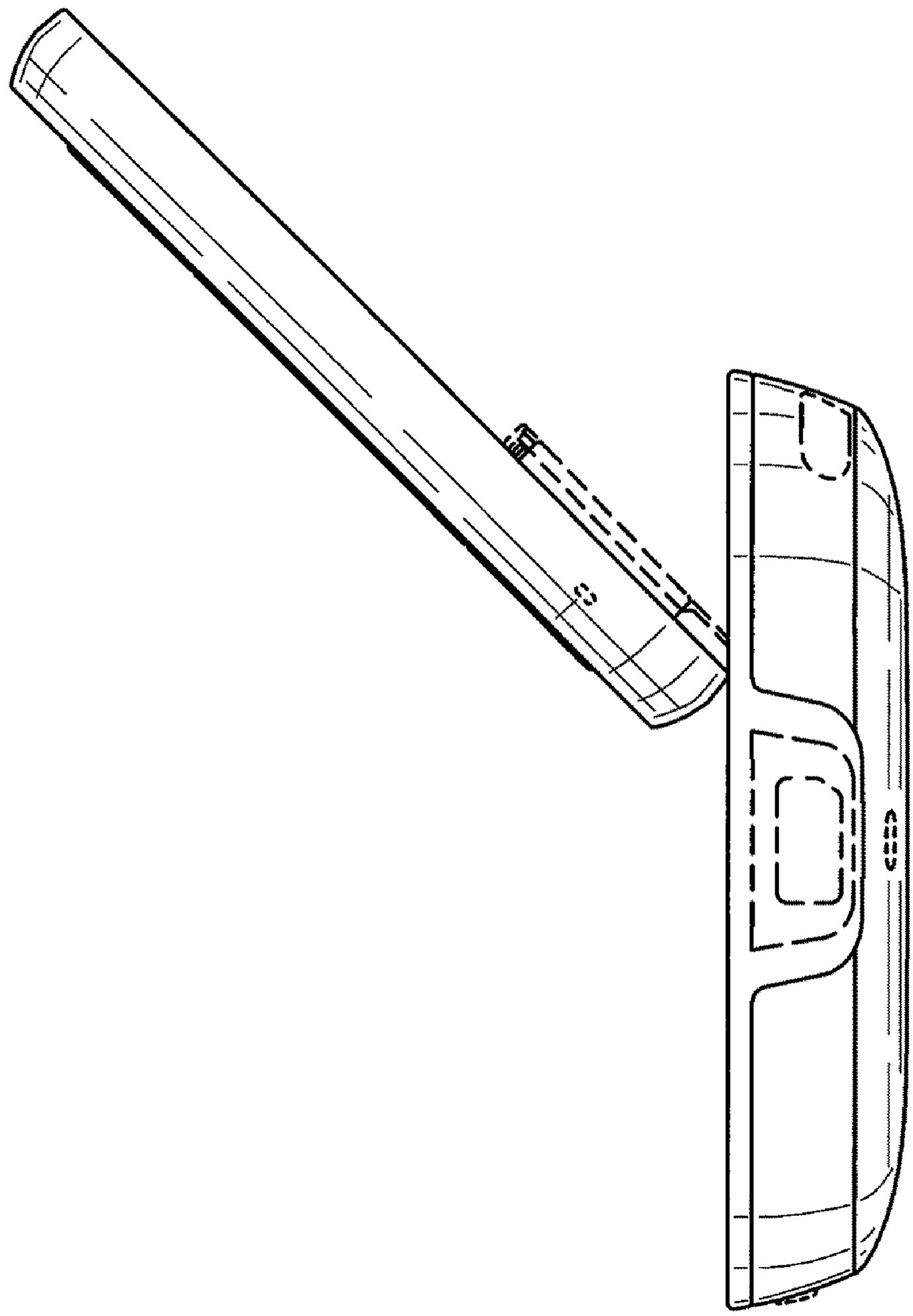

FIG. 5

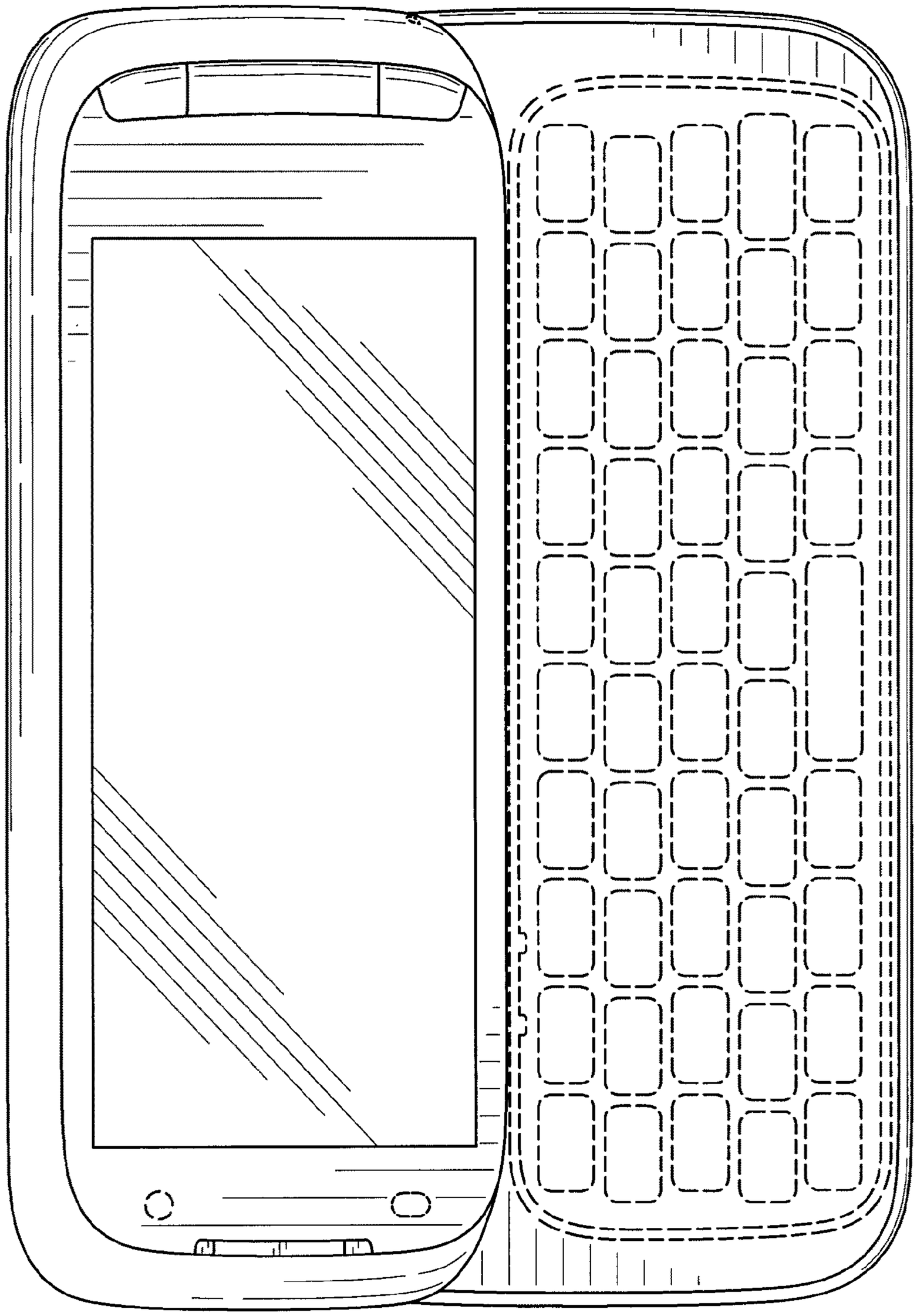

FIG. 6

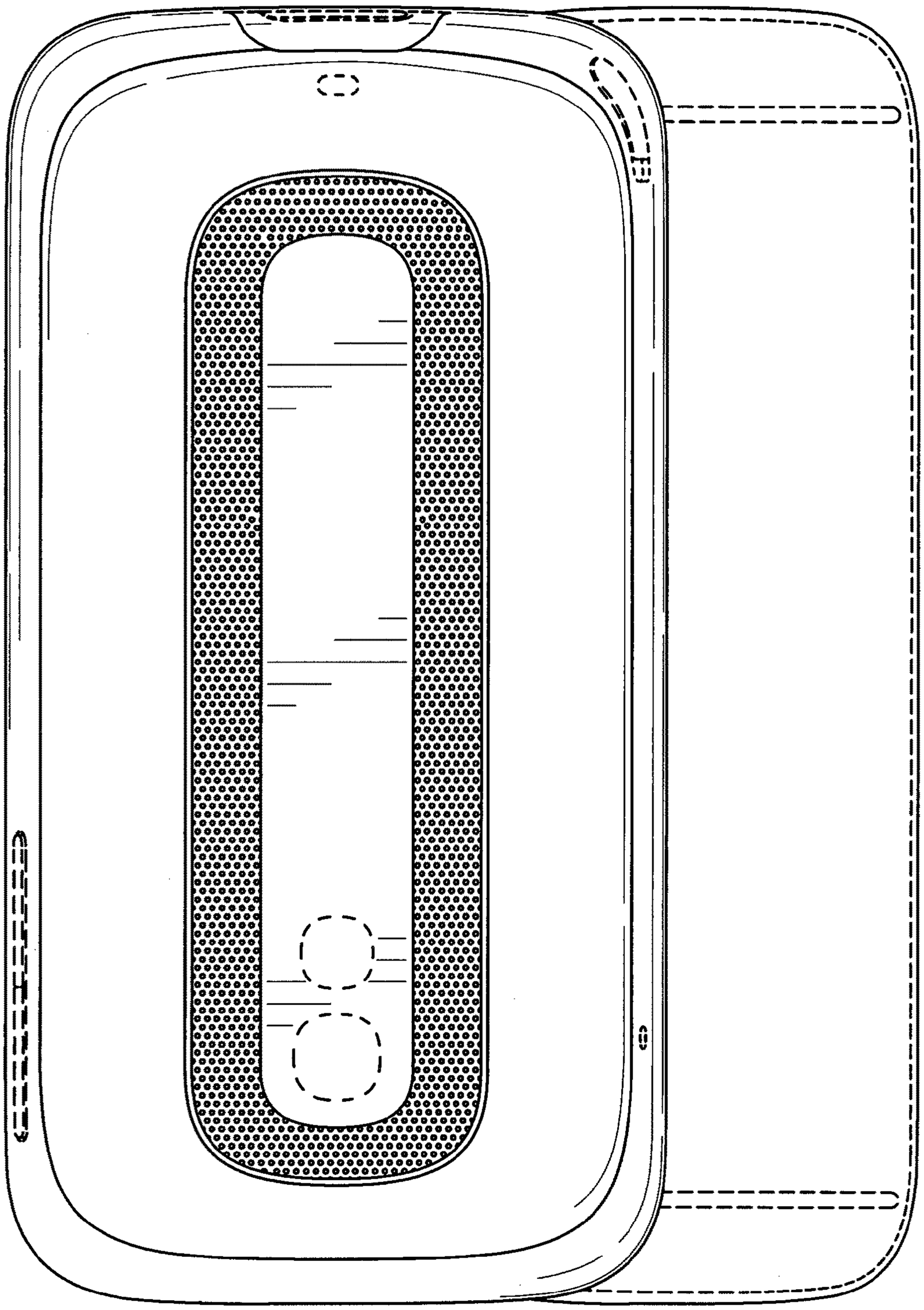

FIG. 7

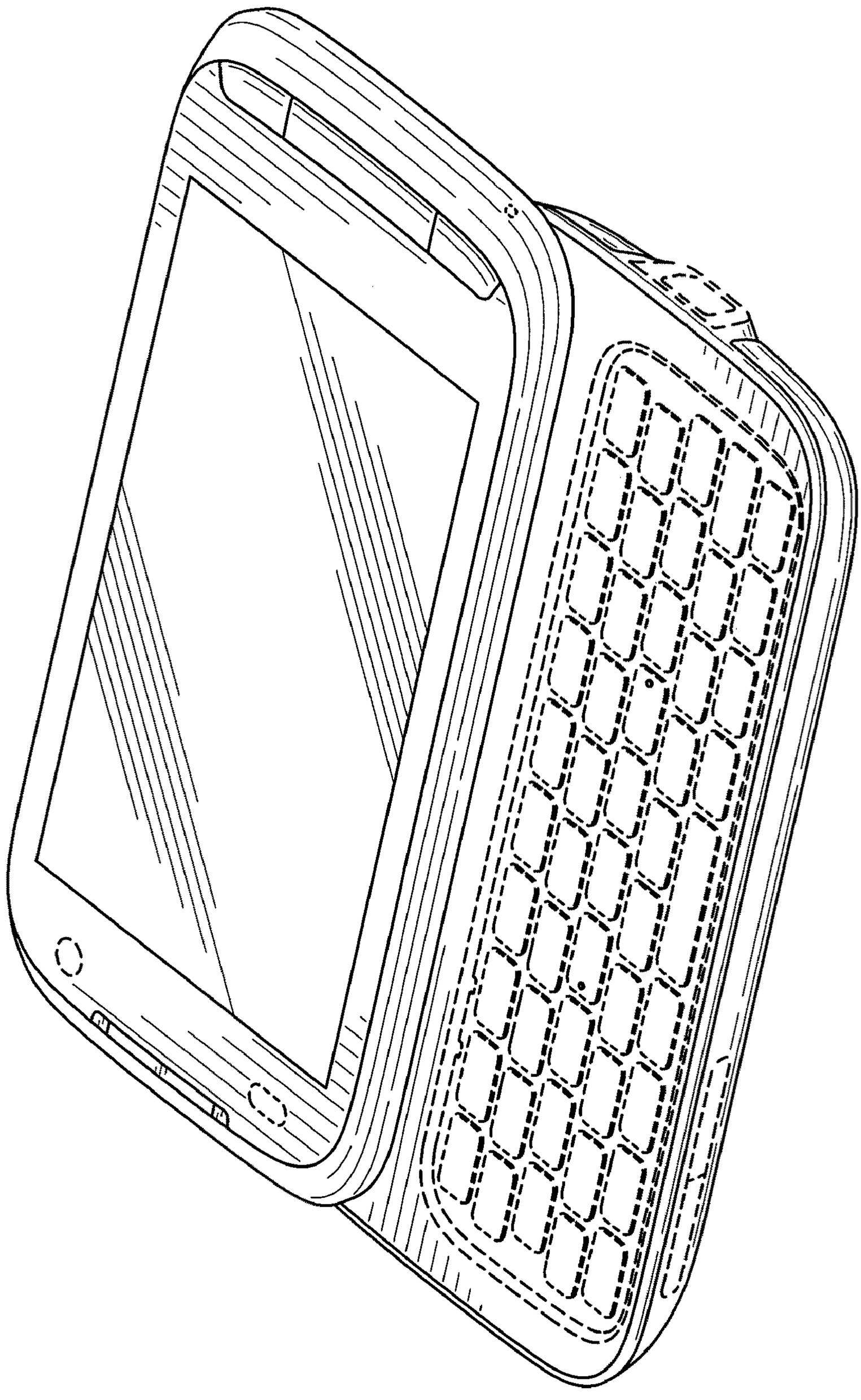

FIG. 8

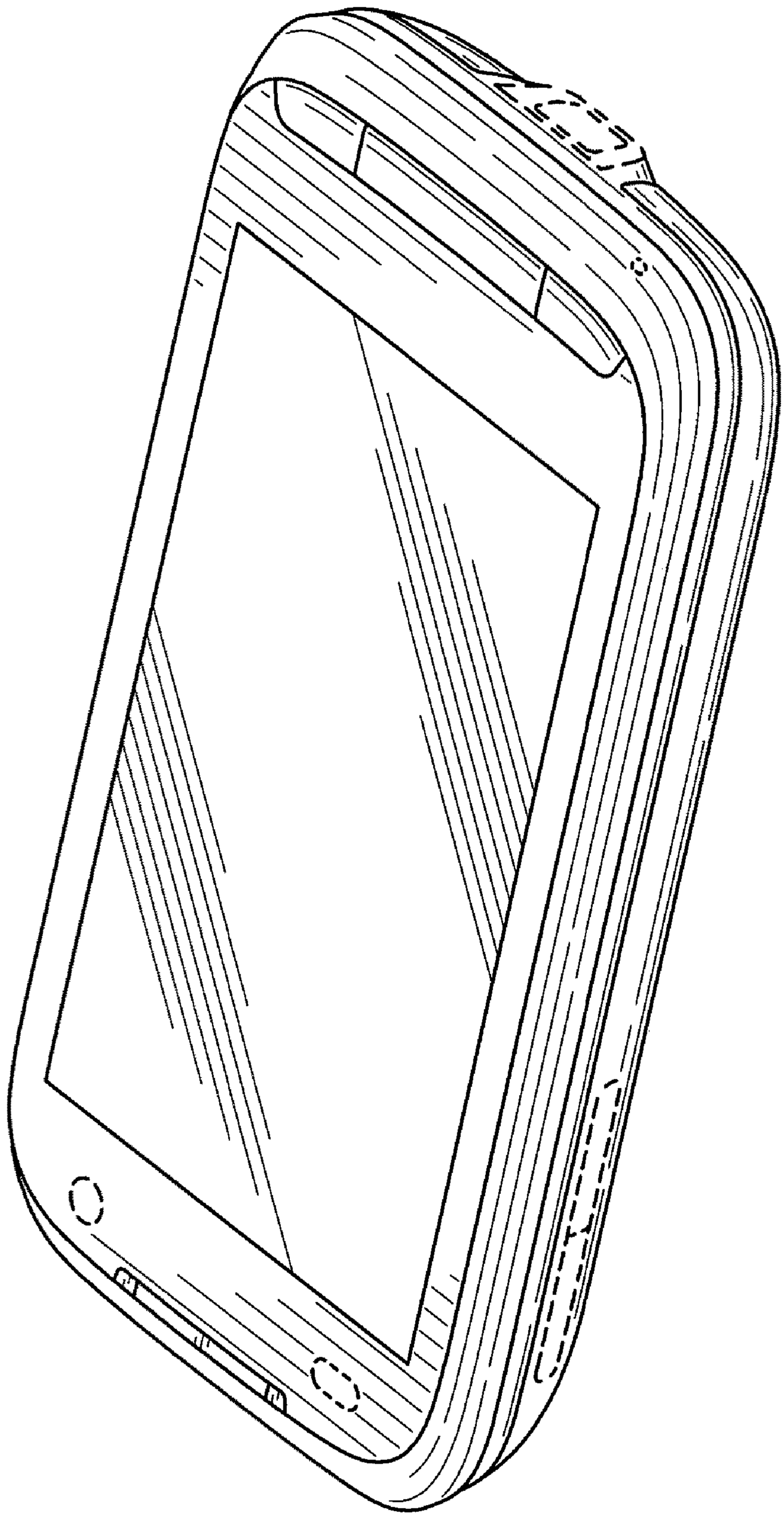

FIG. 9