US00D611905S

(12) United States Design Patent

Takada et al.

(10) Patent No.: US D611,905 S
(45) Date of Patent: ** Mar. 16, 2010

(54) **ELECTRICAL CONNECTOR**

(75) Inventors: **Toshiyuki Takada**, Tokyo (JP); **Masakazu Nagata**, Tokyo (JP)

(73) Assignee: **Hirose Electric Co., Ltd.**, Tokyo (JP)

(**) Term: **14 Years**

(21) Appl. No.: **29/311,449**

(22) Filed: **Mar. 19, 2009**

(30) **Foreign Application Priority Data**

Dec. 2, 2008 (JP) 2008-030855

(51) **LOC (9) Cl.** **13-03**
(52) **U.S. Cl.** **D13/147**
(58) **Field of Classification Search** D13/120, D13/146–147, 154, 184, 199; 174/16.3; 257/697, 727; 361/769
See application file for complete search history.

(56) **References Cited**

U.S. PATENT DOCUMENTS

D337,114 S * 7/1993 Mantz D14/188
D348,269 S * 6/1994 Chong D14/140.4
D424,529 S * 5/2000 Raspotnig D13/184
D440,641 S * 4/2001 Hollinshead et al. D23/304
7,338,291 B2 * 3/2008 Takada 439/65
2007/0190825 A1 * 8/2007 Shuey et al. 439/108
2008/0242161 A1 * 10/2008 Takada et al. 439/884
2009/0068902 A1 * 3/2009 Nagata 439/717

* cited by examiner

Primary Examiner—Daniel D Bui
(74) *Attorney, Agent, or Firm*—Kubotera & Associates, LLC

(57) **CLAIM**

The ornamental design for an electrical connector, as shown and described.

DESCRIPTION

FIG. **1** is a perspective view of an electrical connector showing our new design;

FIG. **2** is front view thereof;

FIG. **3** is a rear view thereof;

FIG. **4** is a right side view thereof;

FIG. **5** is a left side view thereof;

FIG. **6** is a plan view thereof; and,

FIG. **7** is a bottom view thereof.

The broken line portion of the figure drawings is included to show unclaimed subject matter only and forms no part of the claimed design.

1 Claim, 6 Drawing Sheets

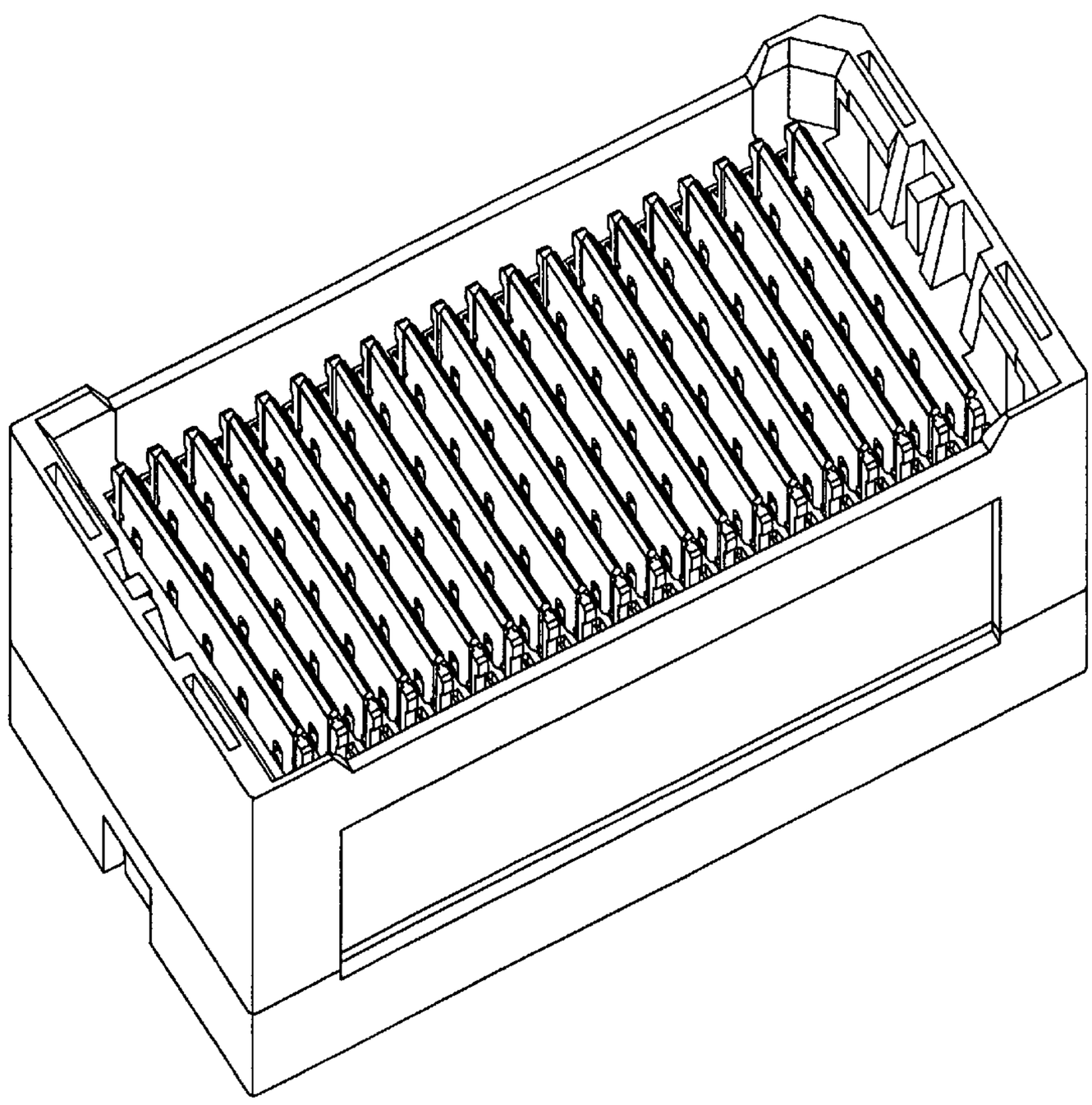

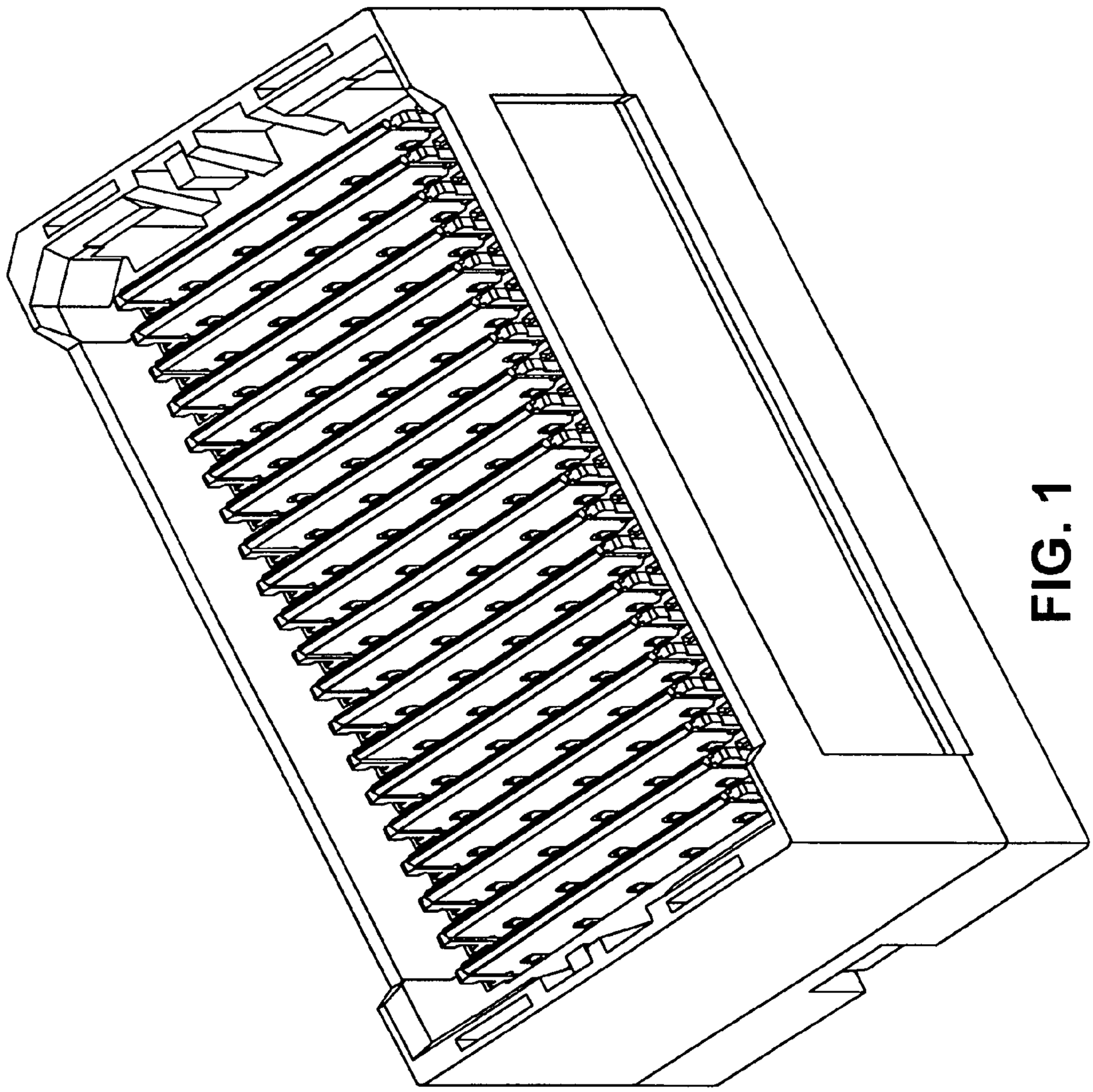

FIG. 1

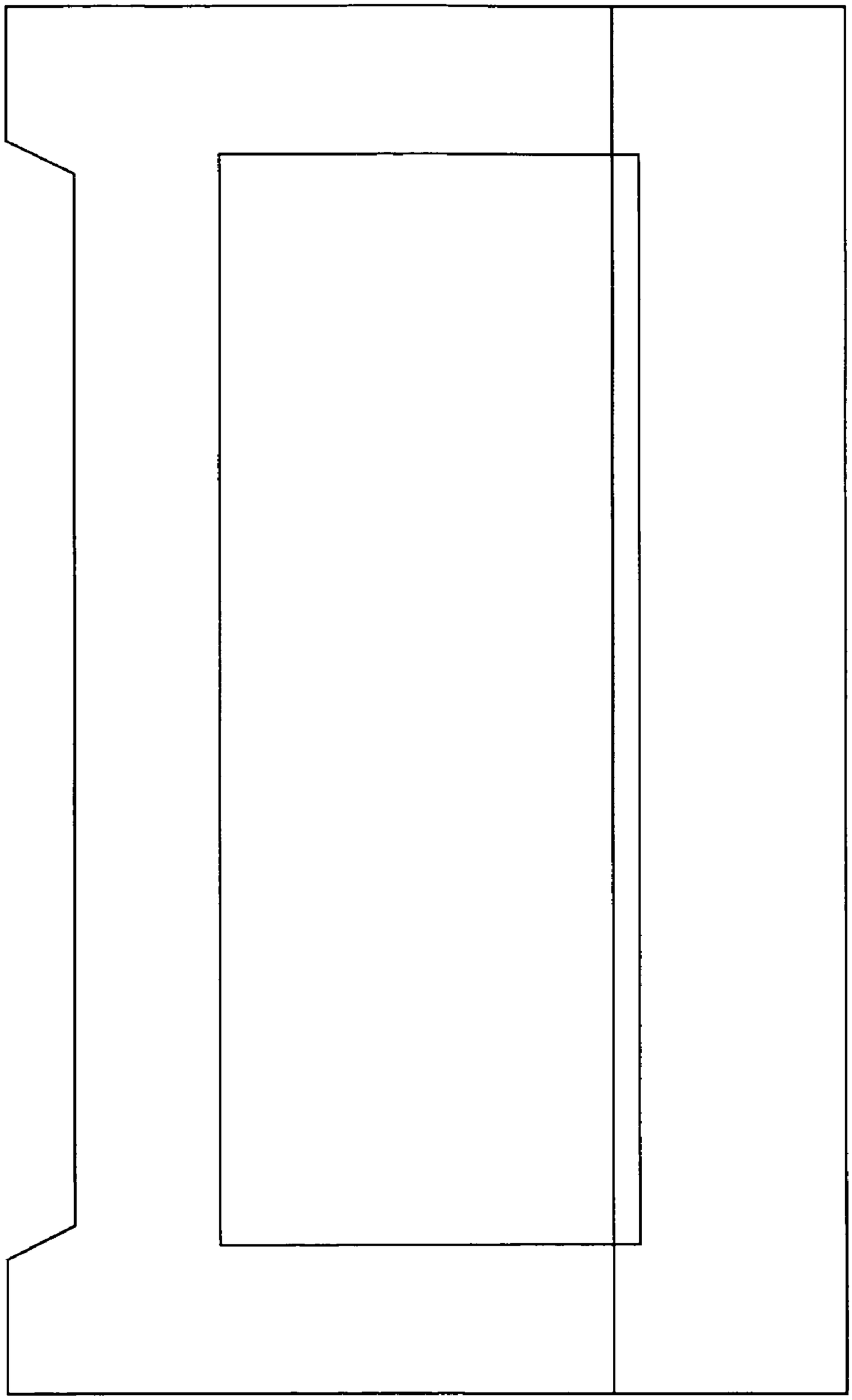

FIG. 2

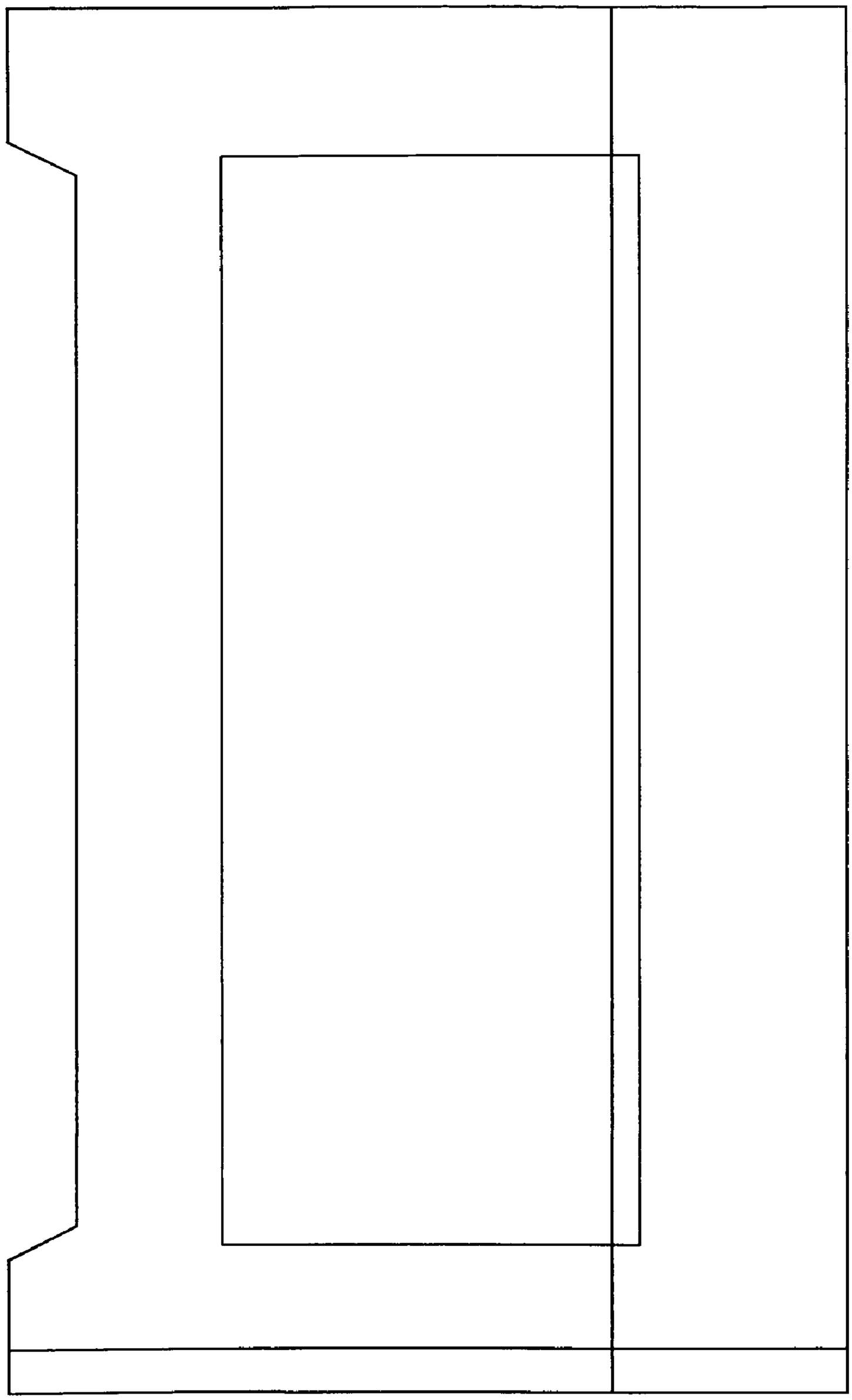

FIG. 3

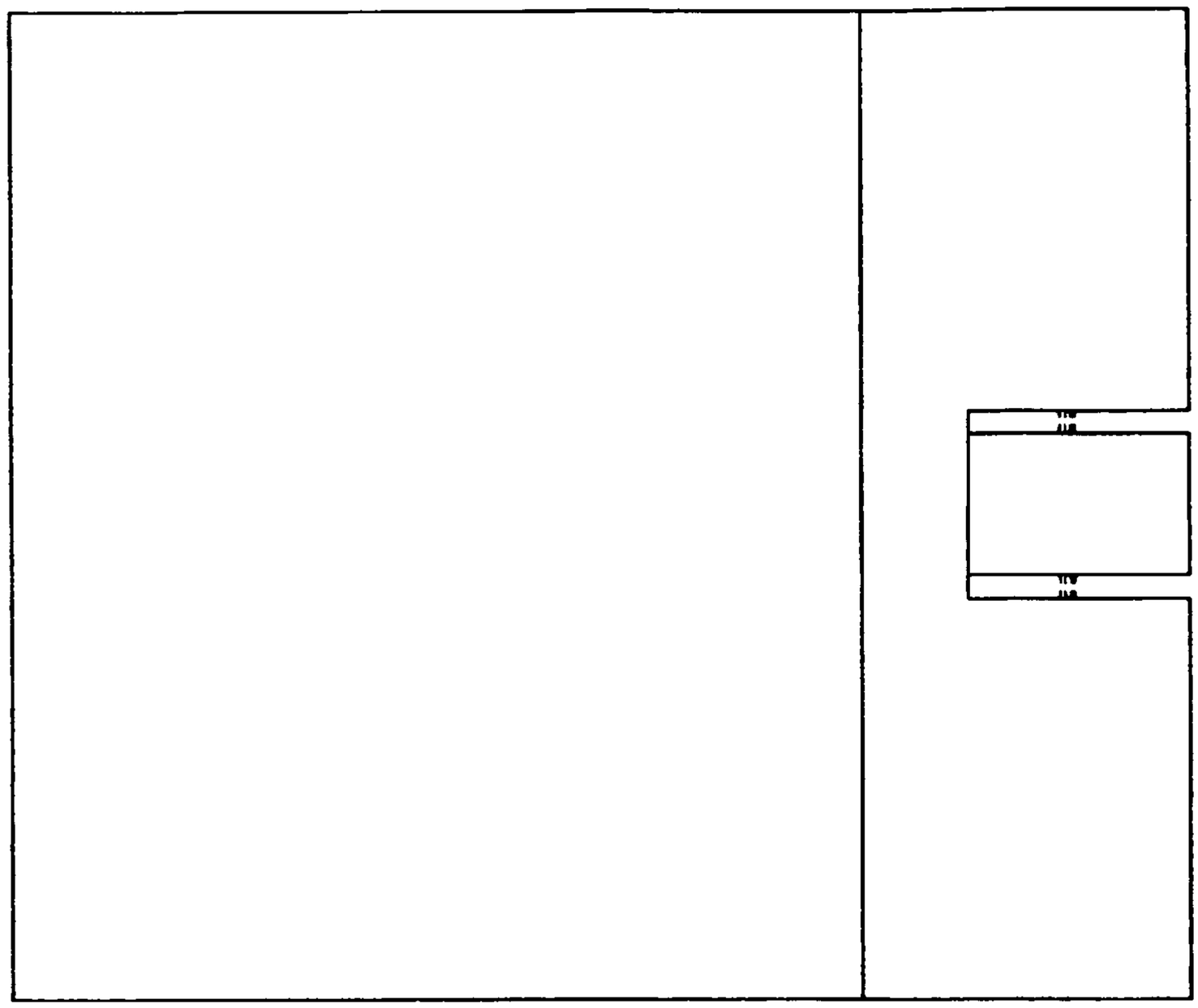

FIG.5

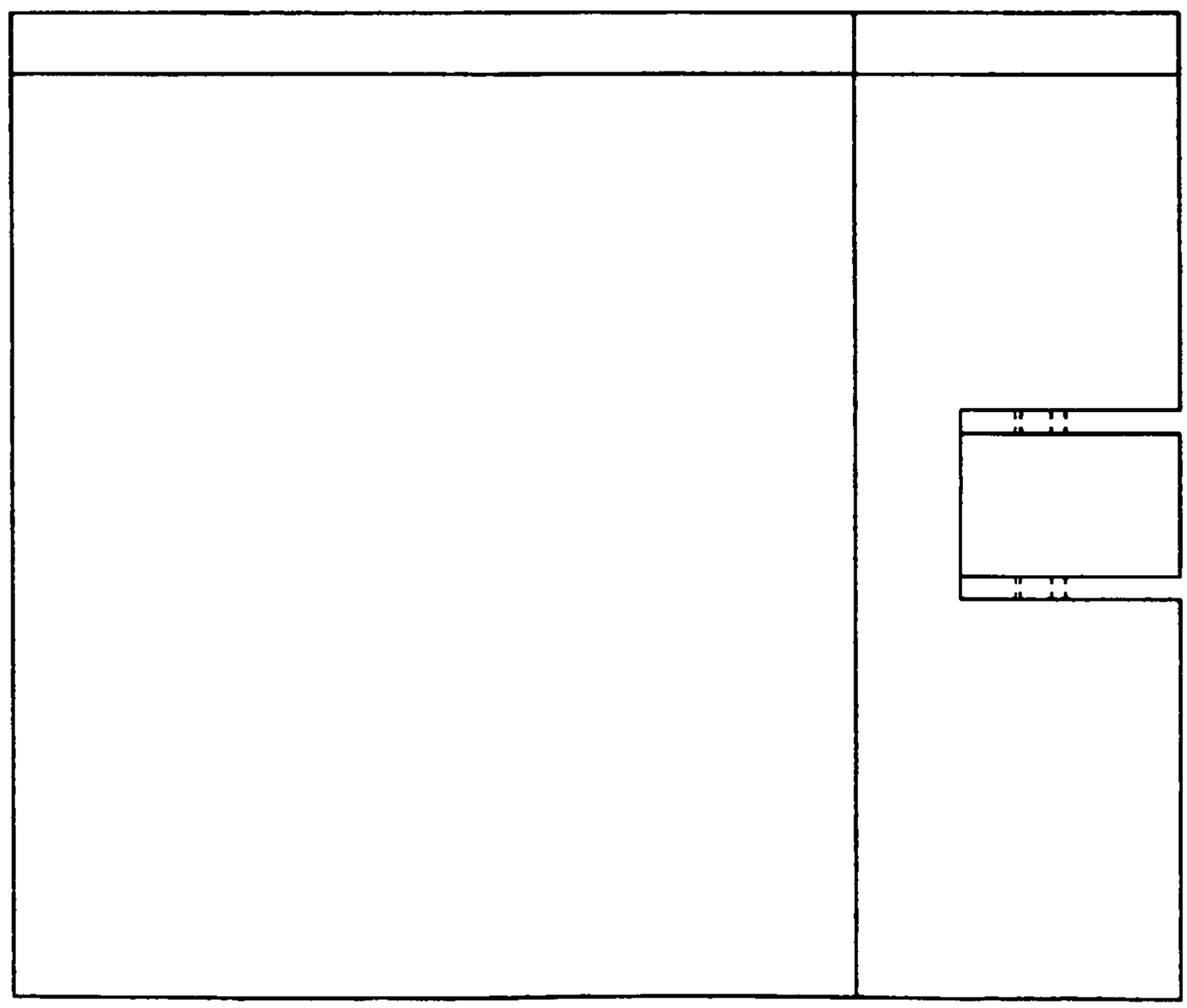

FIG.4

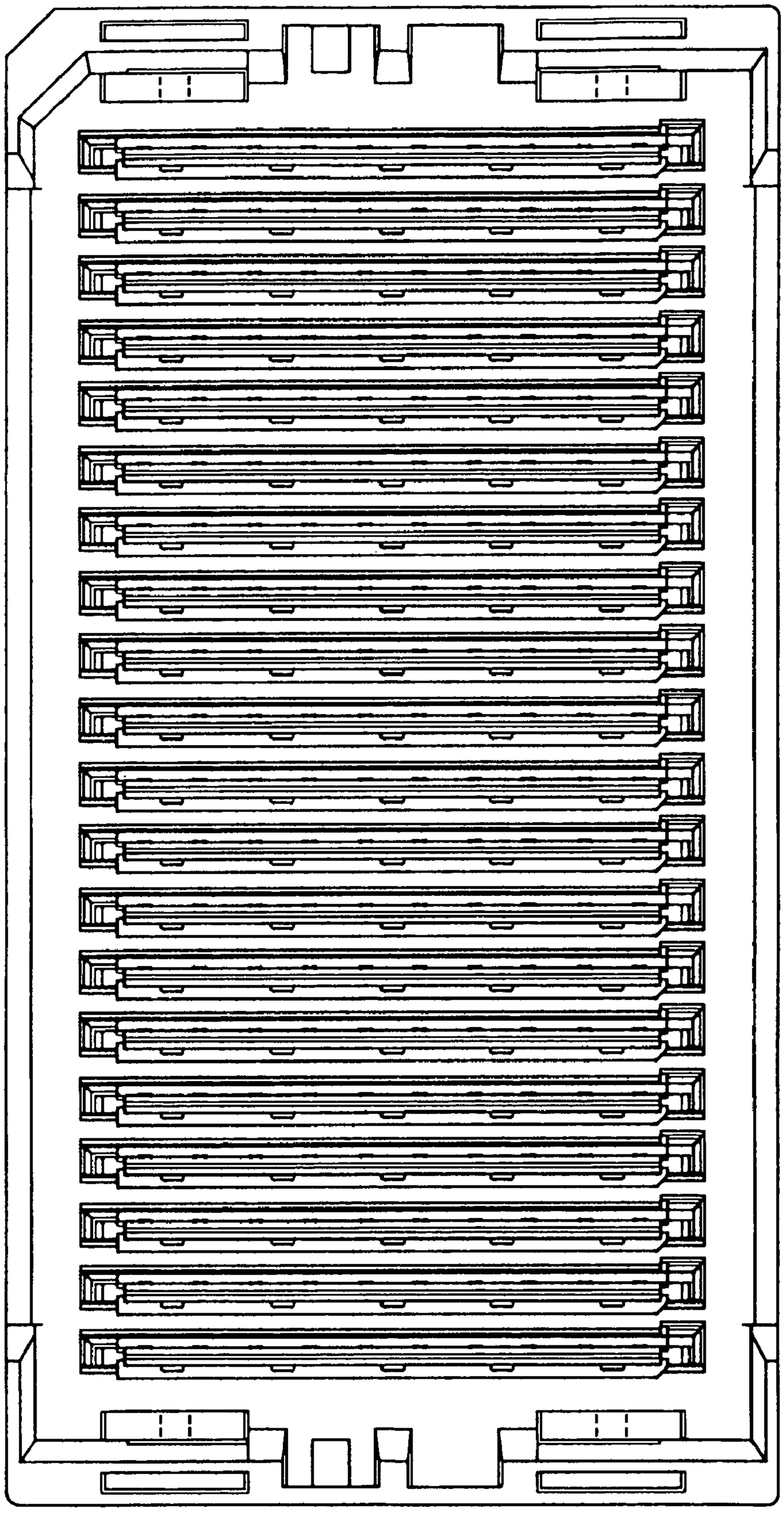

FIG.6

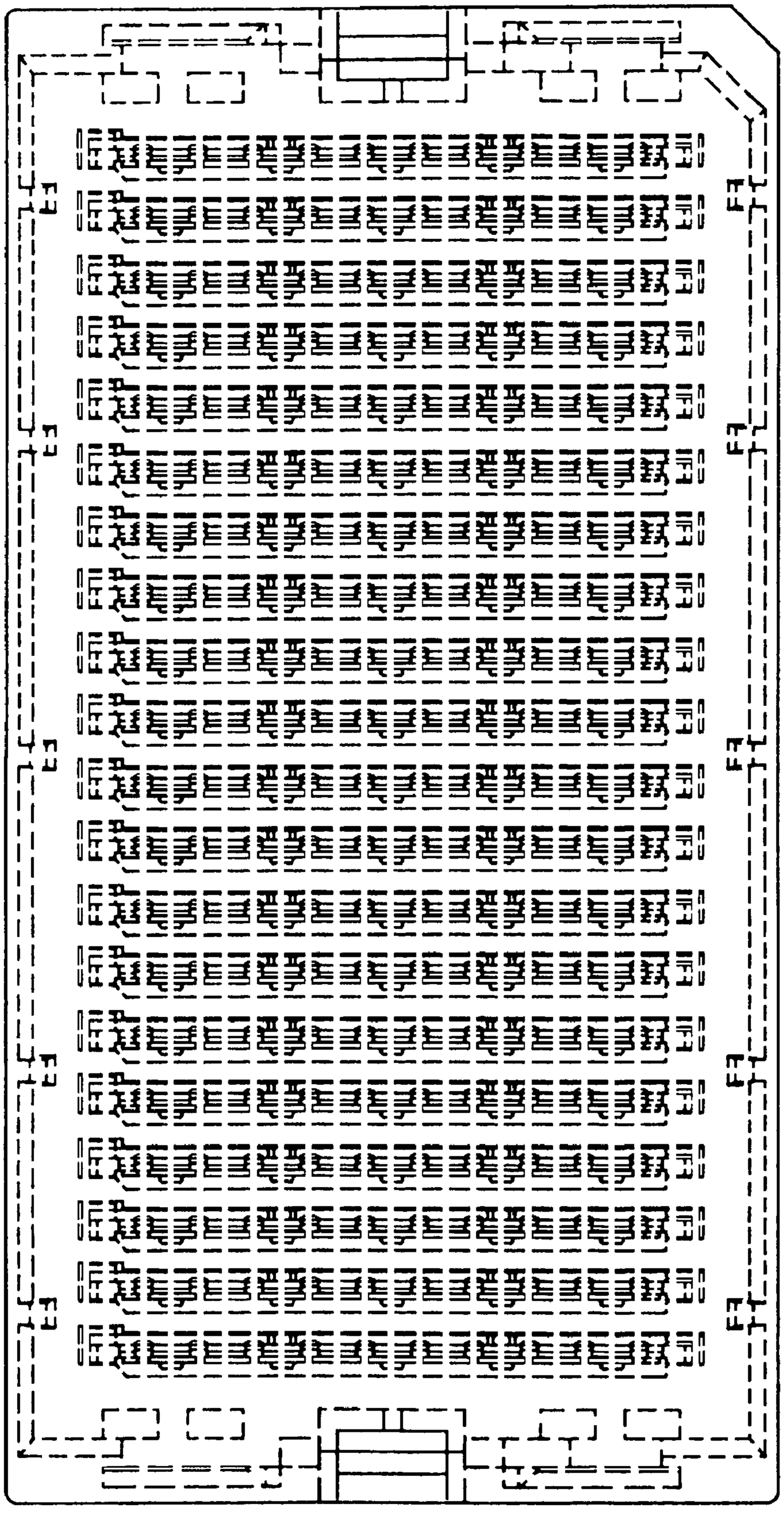

FIG. 7