US00D611464S

(12) United States Design Patent

Salazar et al.

(10) Patent No.: US D611,464 S
(45) Date of Patent: ** Mar. 9, 2010

(54) **KEYPAD FOR A HANDSET**

(75) Inventors: **Eduardo Salazar**, Reseda, CA (US); **Frank Nuovo**, Los Angeles, CA (US)

(73) Assignee: **Nokia Corporation**, Espoo (FI)

(**) Term: **14 Years**

(21) Appl. No.: **29/334,158**

(22) Filed: **Mar. 20, 2009**

(51) **LOC (9) Cl.** **14-03**

(52) **U.S. Cl.** **D14/247**

(58) **Field of Classification Search** ..... D14/247–248, D14/138 R, 138 AD, 138 AC, 138 C, 138 G, D14/191, 203.1–203.8, 496, 144, 244, 432, D14/439, 455, 456, 138 AA, 138 AB, 137, D14/147, 218, 341–347; D10/65, 78, 104; D13/168; D18/7; 455/566, 575.1, 575.3; 345/169

See application file for complete search history.

(56) **References Cited**

U.S. PATENT DOCUMENTS

D485,547	S	*	1/2004	Olson et al.	D14/218
D491,929	S	*	6/2004	Nuovo et al.	D14/247
D491,930	S	*	6/2004	Widiaman	D14/247
D504,682	S	*	5/2005	Kettula et al.	D14/247
D529,022	S	*	9/2006	Lyles	D14/247
D530,318	S	*	10/2006	Kangasmaa	D14/247
D539,791	S	*	4/2007	Sheu	D14/247
D542,259	S	*	5/2007	Cho et al.	D14/138 AA
D543,530	S	*	5/2007	Ahn et al.	D14/138 AA
D544,858	S	*	6/2007	Lyles	D14/247
D549,699	S	*	8/2007	Bower	D14/247
D550,220	S	*	9/2007	Lyles	D14/247
D550,661	S	*	9/2007	Fahlgren	D14/247
D563,359	S	*	3/2008	Kim et al.	D14/138 AB
D568,849	S		5/2008	Nuovo	
D569,822	S		5/2008	Laine	
D569,859	S	*	5/2008	Nuovo	D14/247
D577,011	S	*	9/2008	Huang et al.	D14/247
D580,940	S	*	11/2008	Dabov	D14/455
D592,652	S	*	5/2009	Laine	D14/247
D601,981	S	*	10/2009	Kim et al.	D14/138 AA
2001/0042681	A1	*	11/2001	Yoon et al.	200/517
2004/0246663	A1	*	12/2004	Nuovo et al.	361/679

OTHER PUBLICATIONS

Vertu Constellation Ayxta, announced Sep. 2009, [online], [retrieved on Oct. 28, 2009]. Retrieved from Internet ,<URL: http://www.gsmarena.com>.*

Bird M11, announced 1st quarter 2006, [online], [retrieved on Nov. 3, 2009]. Retrieved from Internet ,<URL: http://www.gsmarena.com>.*

* cited by examiner

Primary Examiner—Jeffrey D Asch
Assistant Examiner—Bridget L Eland
(74) *Attorney, Agent, or Firm*—Banner & Witcoff, Ltd.

(57) **CLAIM**

The ornamental design for a keypad for a handset, as shown and described.

DESCRIPTION

FIG. **1** is a perspective front view of a keypad for a handset showing our new design;

FIG. **2** is a front view thereof;

FIG. **3** is a right side view thereof;

FIG. **4** is a left side view thereof;

FIG. **5** is a top view thereof;

FIG. **6** is a bottom view thereof; and,

FIG. **7** is a rear view thereof.

The broken line showing of the environmental structure of the handset is for environmental purposes only and forms no part of the claimed design.

1 Claim, 5 Drawing Sheets

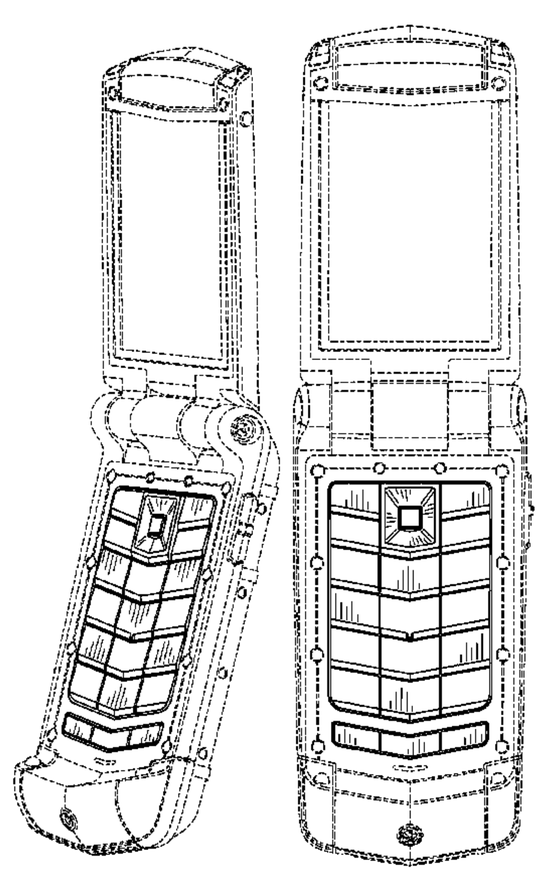

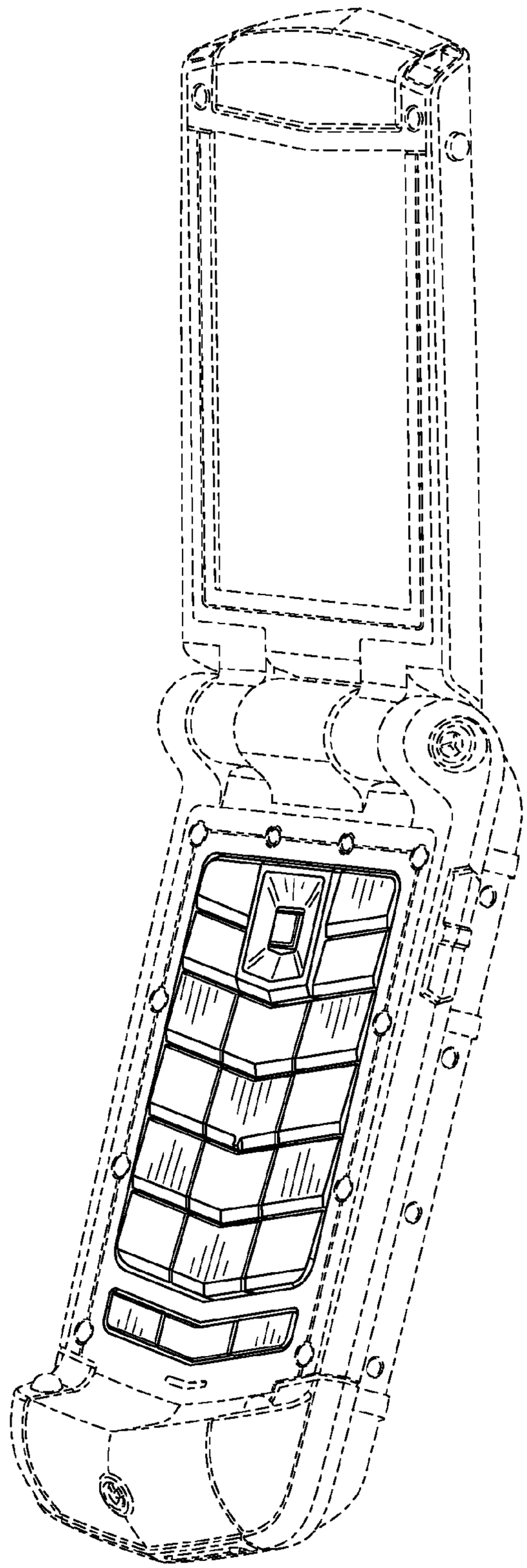

FIG. 1

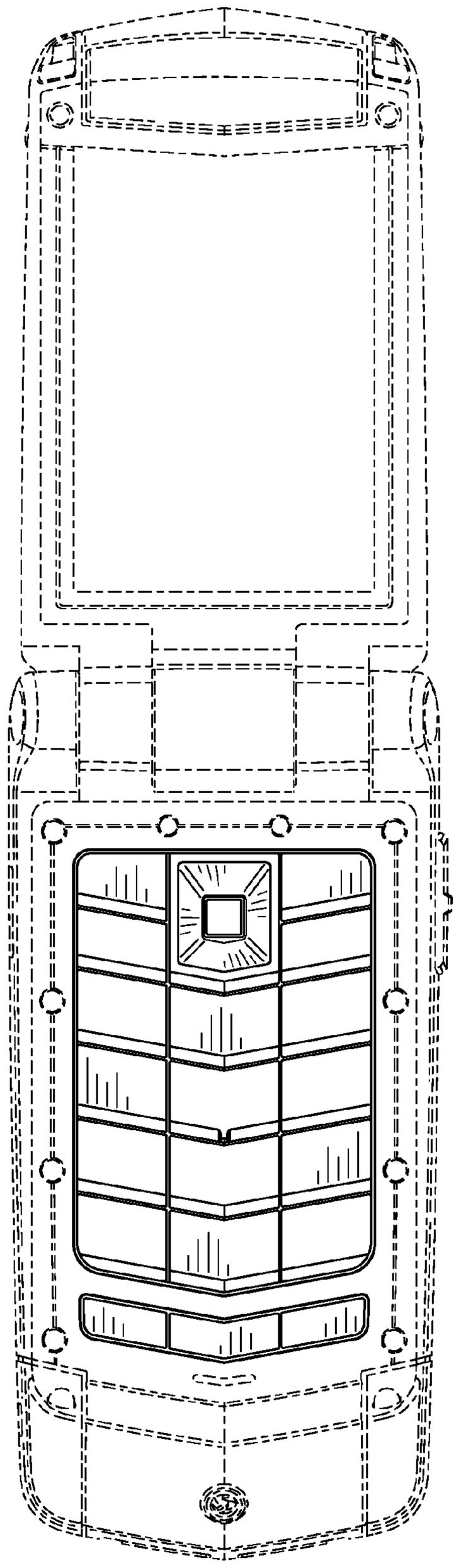

FIG. 2

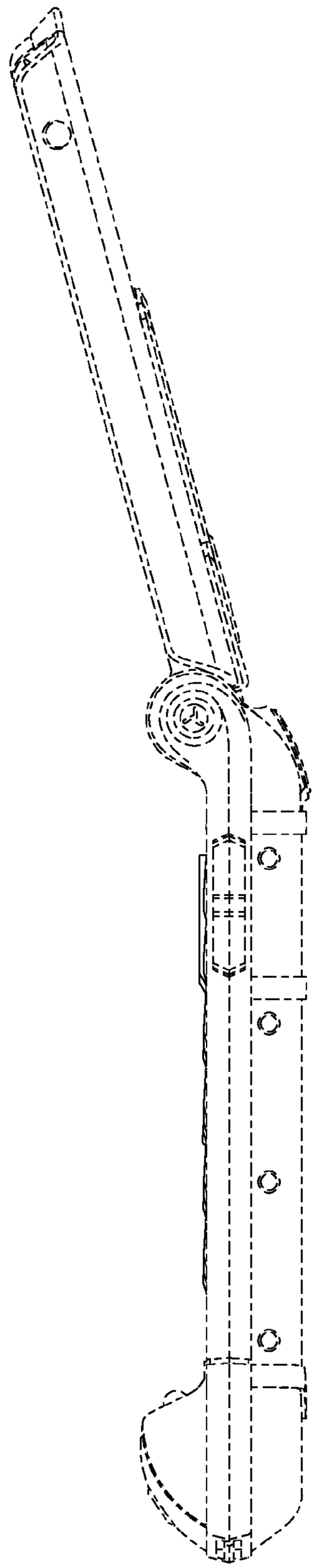

FIG. 3

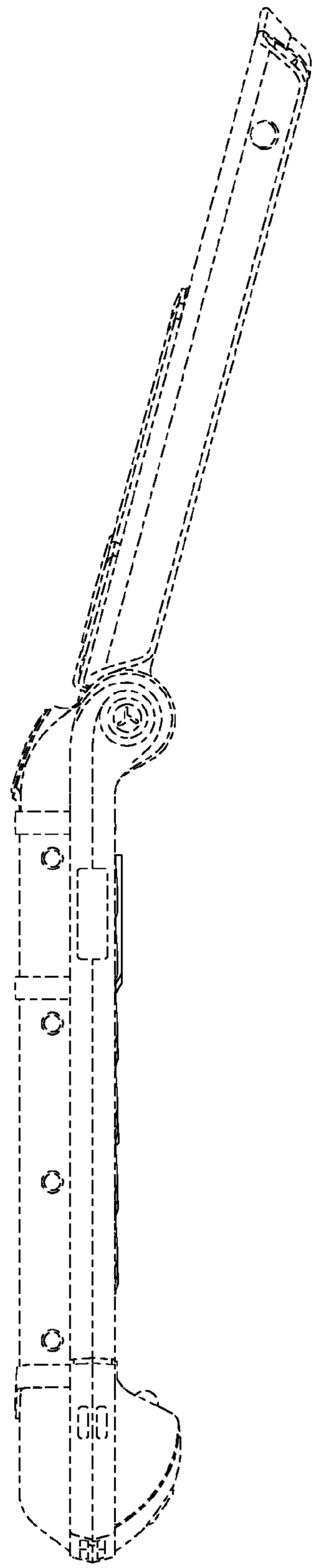

FIG. 4

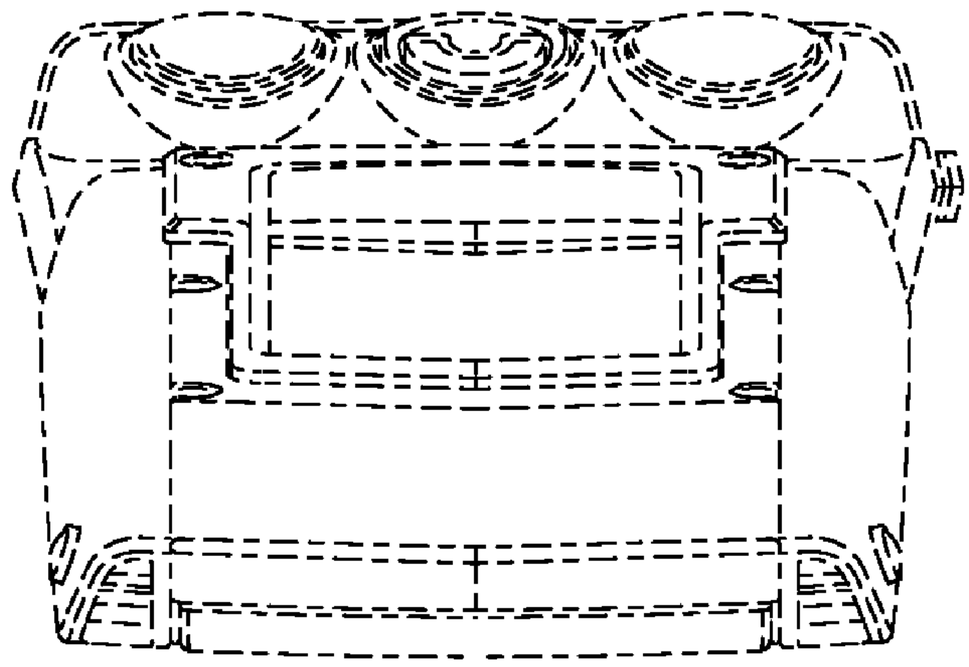

FIG. 5

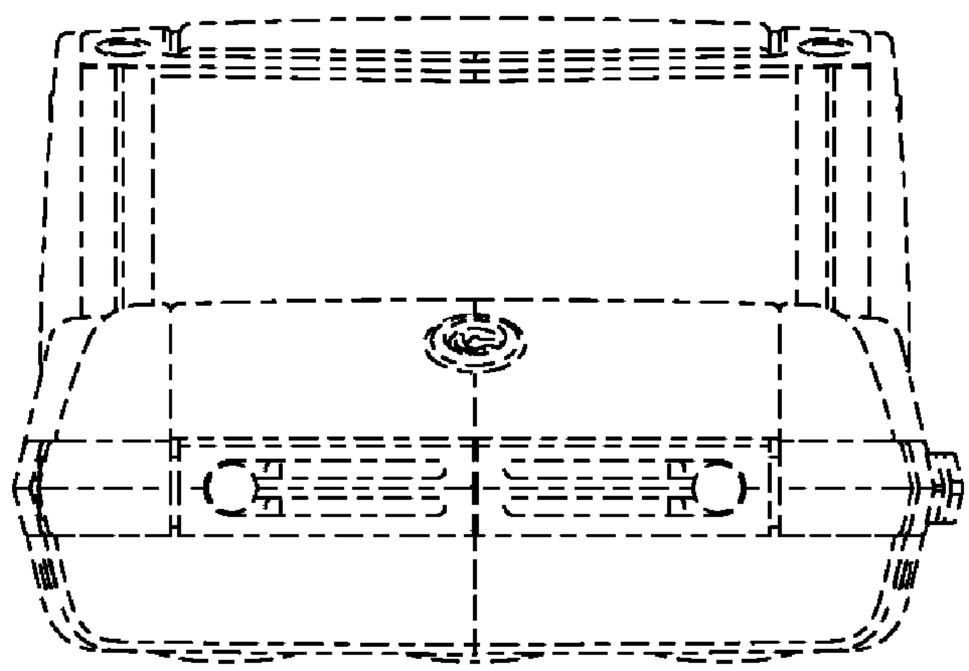

FIG. 6

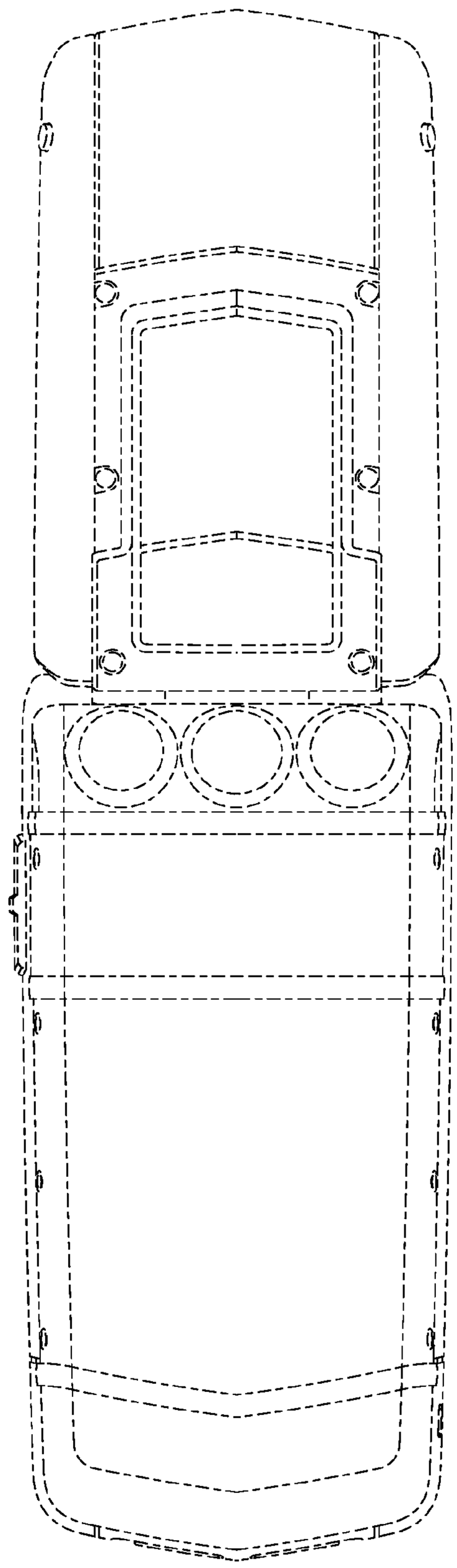

FIG. 7