US00D607413S

(12) United States Design Patent

Egan et al.

(10) Patent No.: US D607,413 S
(45) Date of Patent: ** Jan. 5, 2010

(54) **FIVE PORT COAXIAL CABLE TERMINAL ADAPTER**

(75) Inventors: **John Egan**, Franktown, CO (US); **Chris Egan**, Parker, CO (US); **Chad Wells**, Highlands Ranch, CO (US); **Jacky Mei**, Taipei (TW); **Ghihon Wu**, Taipei (TW); **Shan Juan Lu**, Seattle, WA (US)

(73) Assignee: **Evolution Broadband, LLC**, Centennial, CO (US)

(**) Term: **14 Years**

(21) Appl. No.: **29/322,684**

(22) Filed: **Aug. 8, 2008**

(51) **LOC (9) Cl.** **13-03**
(52) **U.S. Cl.** **D13/151**
(58) **Field of Classification Search** D13/133, D13/146, 147, 151, 154, 158, 184, 199; D14/125, D14/217, 230, 239, 299; 174/59; 333/100, 333/101, 206; 439/63, 579, 578, 581, 709
See application file for complete search history.

(56) **References Cited**

U.S. PATENT DOCUMENTS

D301,241	S	*	5/1989	Chino	D14/217
D396,691	S	*	8/1998	Shen	D13/147
D399,846	S	*	10/1998	Beggs	D14/217
D404,713	S	*	1/1999	Hsiang	D13/147
D452,682	S	*	1/2002	Inoue	D13/151
D452,850	S	*	1/2002	Inoue	D13/151
D464,965	S	*	10/2002	Wang et al.	D14/358
6,969,278	B2		11/2005	Shapson	
7,029,293	B2		4/2006	Shapson	
D532,385	S		11/2006	Shapson	
D537,793	S		3/2007	Shapson	
D546,291	S		7/2007	Shapson	
D546,292	S		7/2007	Shapson	
2007/0040948	A1		2/2007	Shapson	
2009/0077608	A1		3/2009	Romerein et al.	

* cited by examiner

Primary Examiner—Daniel D Bui
Assistant Examiner—Thomas J Johaness
(74) *Attorney, Agent, or Firm*—John R. Ley

(57) **CLAIM**

The design for the five port coaxial cable terminal adapter, as shown and described.

DESCRIPTION

FIG. **1** is a perspective view of the five port coaxial cable terminal adapter showing our new design;

FIG. **2** is a front elevational view thereof;

FIG. **3** is a back elevational view thereof;

FIG. **4** is a right side elevational view thereof;

FIG. **5** is a left side elevational view thereof;

FIG. **6** is a top plan view thereof; and,

FIG. **7** is a bottom planned view thereof.

The broken line portion of the figure drawings is included to show unclaimed subject matter only and forms no part of the claimed design.

1 Claim, 5 Drawing Sheets

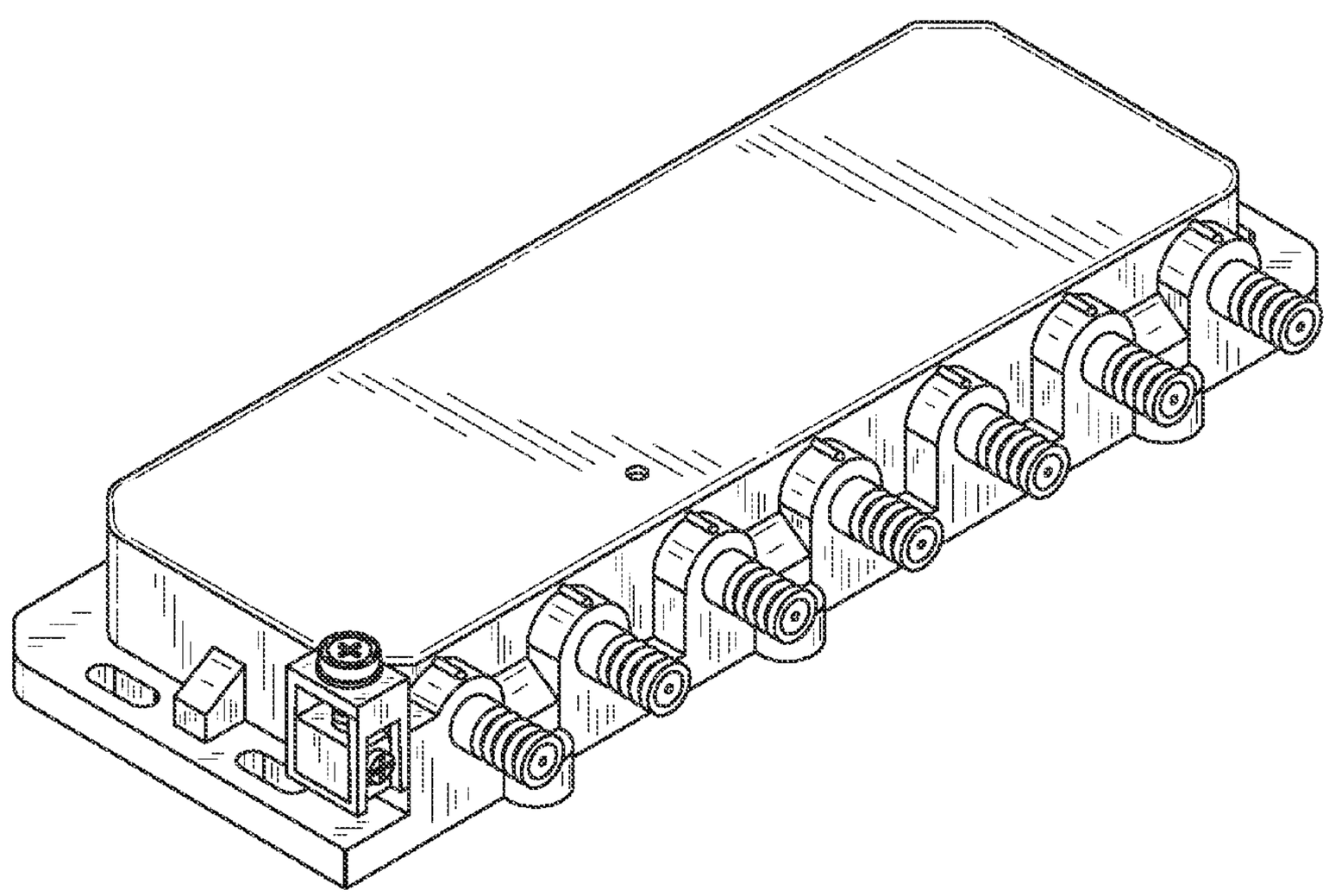

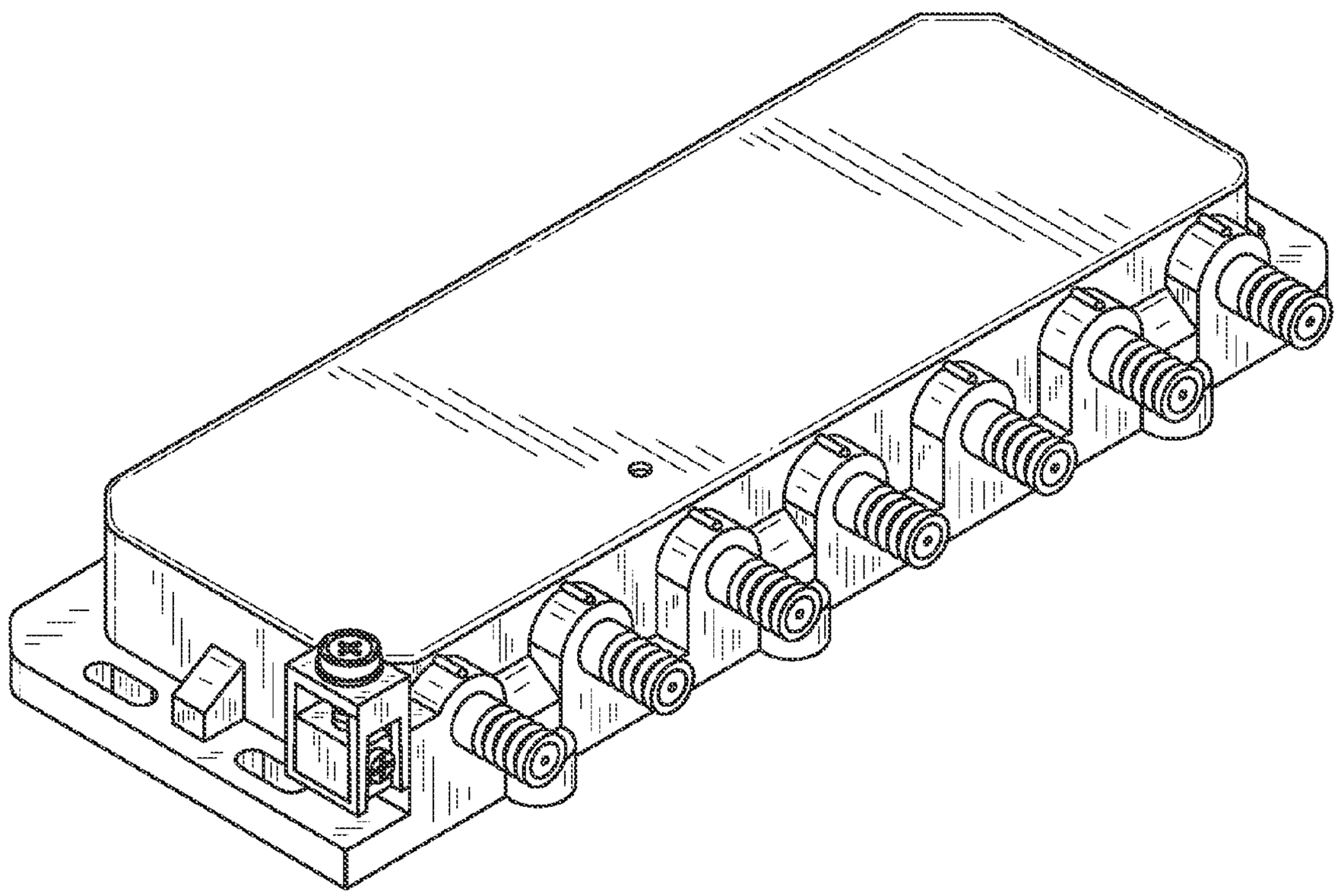

FIG. 1

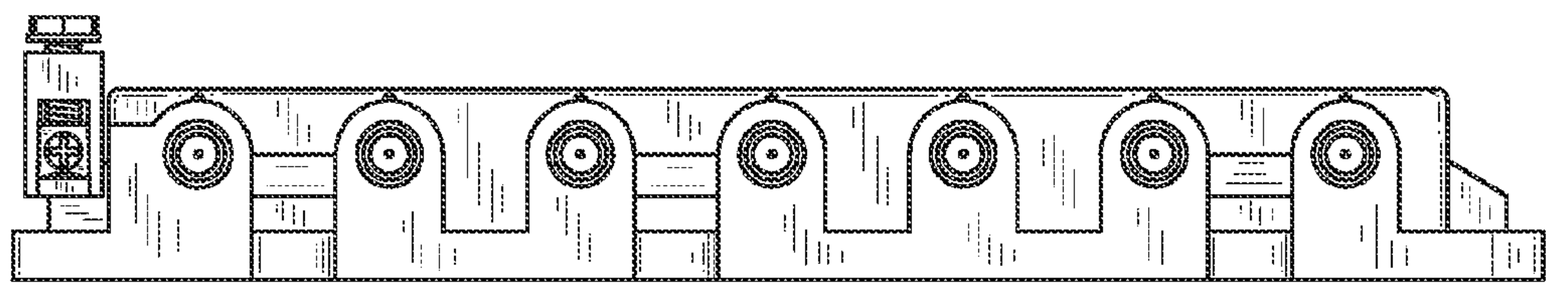

FIG.2

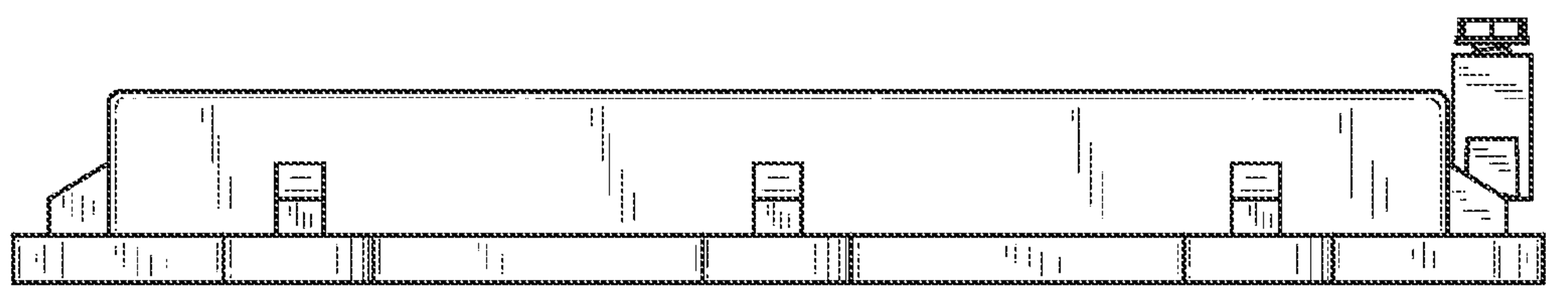

FIG.3

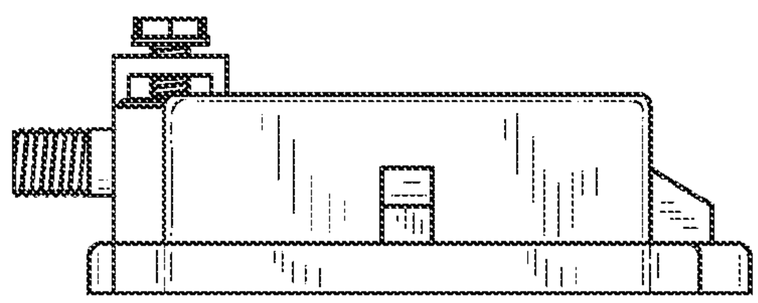

FIG.4

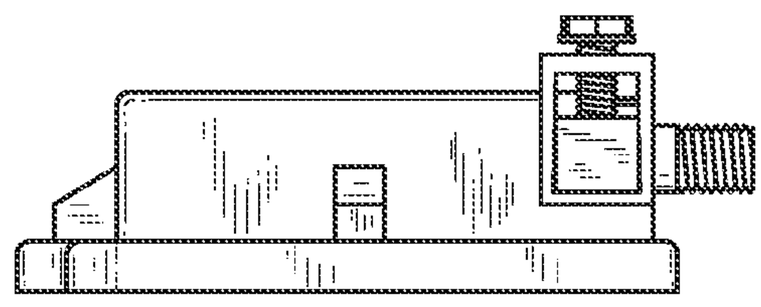

FIG.5

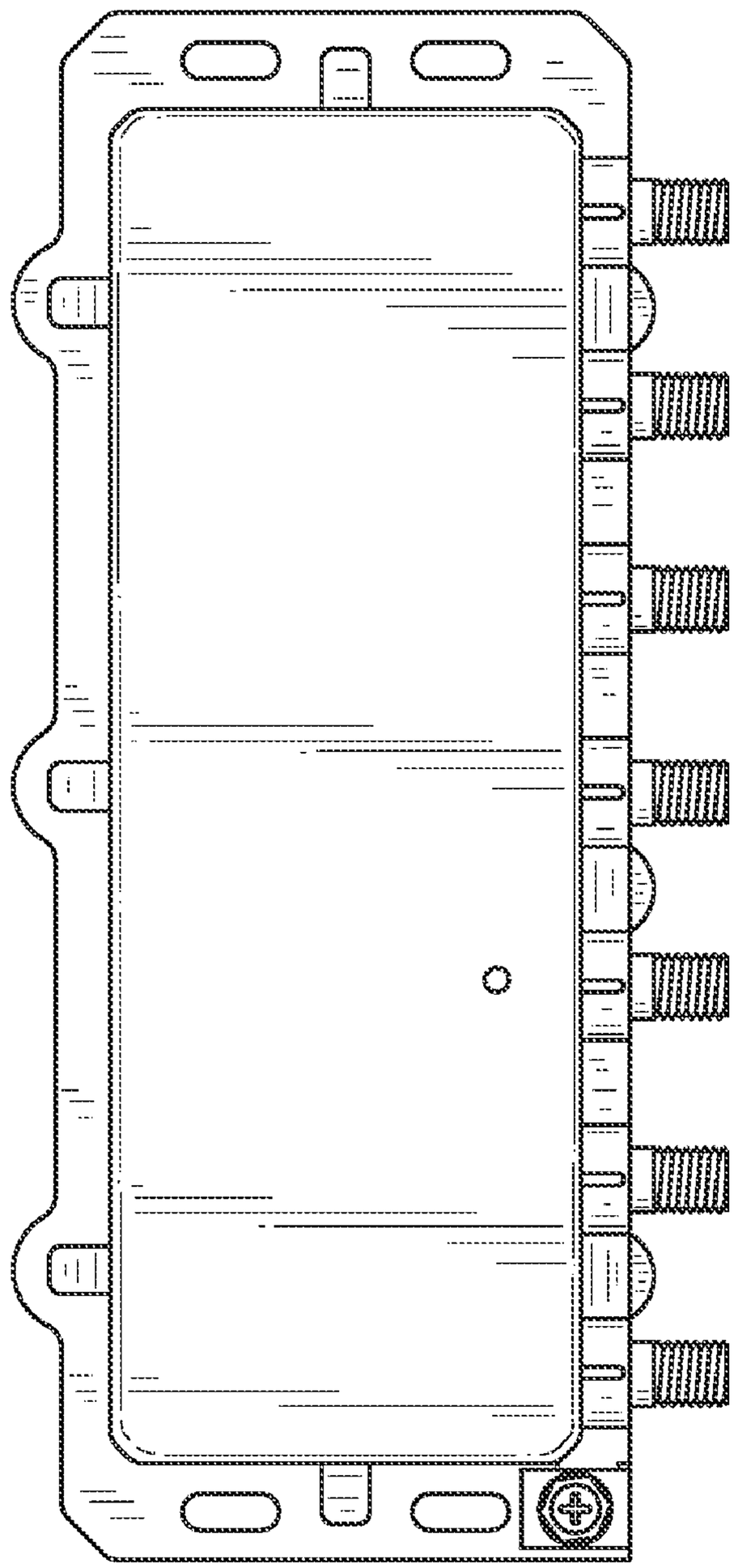

FIG. 6

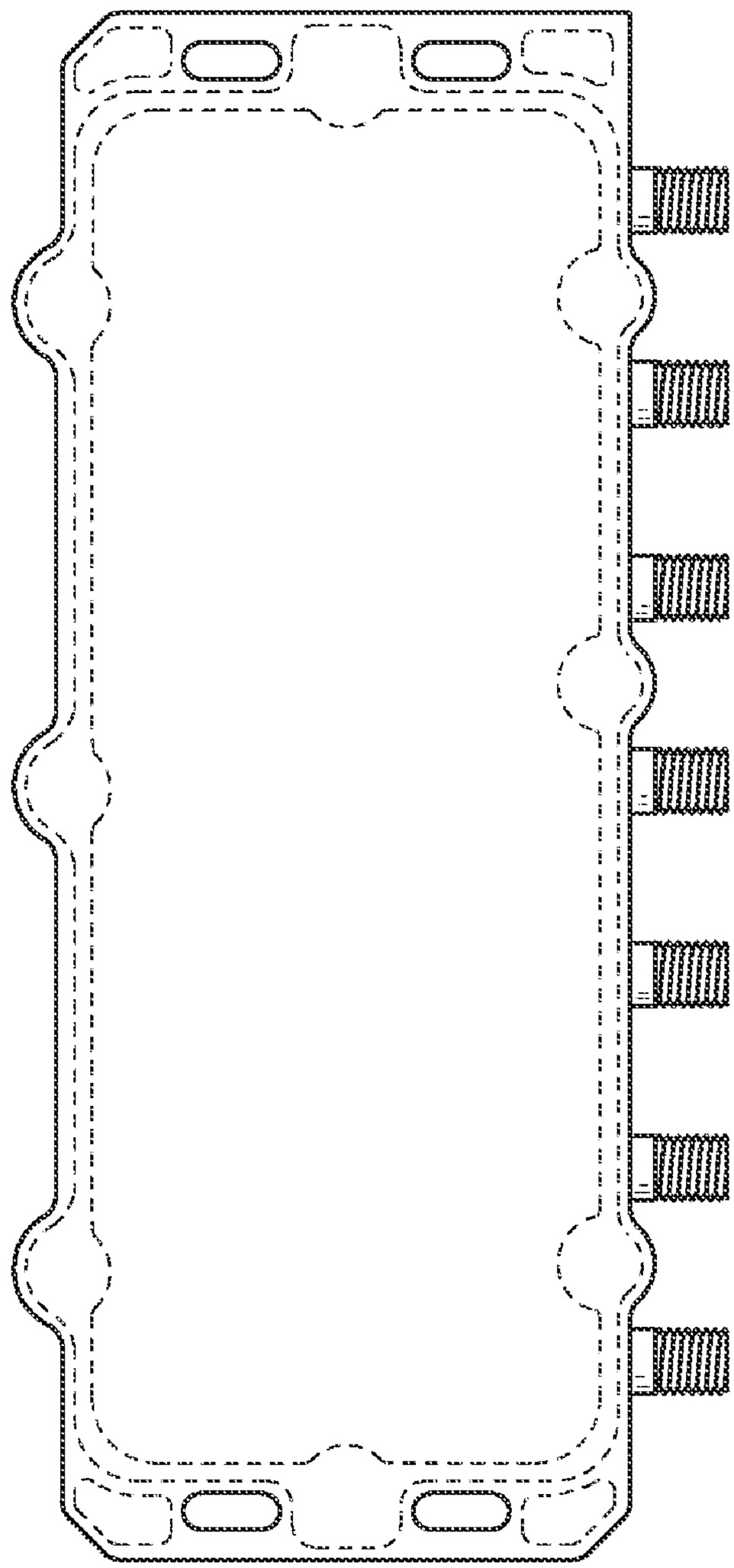

FIG. 7