US00D607393S

(12) United States Design Patent
Watanabe

(10) Patent No.: US D607,393 S
(45) Date of Patent: ** Jan. 5, 2010

(54) **REAR LICENSE GARNISH FOR AUTOMOBILE**

(75) Inventor: **Takayuki Watanabe**, Saitama-ken (JP)

(73) Assignee: **Honda Motor Co., Ltd.**, Tokyo (JP)

(**) Term: **14 Years**

(21) Appl. No.: **29/338,379**

(22) Filed: **Jun. 10, 2009**

(30) **Foreign Application Priority Data**

Dec. 12, 2008 (JP) 2008-031609

(51) **LOC (9) Cl.** **12-16**
(52) **U.S. Cl.** **D12/193**
(58) **Field of Classification Search** D12/193, D12/400, 190, 196; D6/300–303, 310–314; 40/200–204, 207–214; 362/497, 473, 327, 362/604; D20/13
See application file for complete search history.

(56) **References Cited**

U.S. PATENT DOCUMENTS

D76,530 S * 10/1928 Gates D12/193
D162,840 S * 4/1951 Keller D12/193
D176,332 S * 12/1955 Heim D12/193
D280,610 S * 9/1985 Preisler D12/193
D491,505 S * 6/2004 Spencer D12/193
D502,434 S * 3/2005 Leibman D12/193
D534,110 S * 12/2006 Kellermann D12/193

* cited by examiner

Primary Examiner—Stacia Cadmus
(74) *Attorney, Agent, or Firm*—Westerman, Hattori, Daniels & Adrian, LLP

(57) **CLAIM**

The ornamental design for a rear license garnish for automobile, as shown and described.

DESCRIPTION

FIG. **1** is a perspective view from the front side of a rear license garnish for automobile.

FIG. **2** is a front elevation view thereof.

FIG. **3** is a top plan view thereof; and,

FIG. **4** is a right side elevation view thereof.

The portion of the article shown in broken lines is for the purpose of showing background structure only and forms no part of the claimed design.

1 Claim, 4 Drawing Sheets

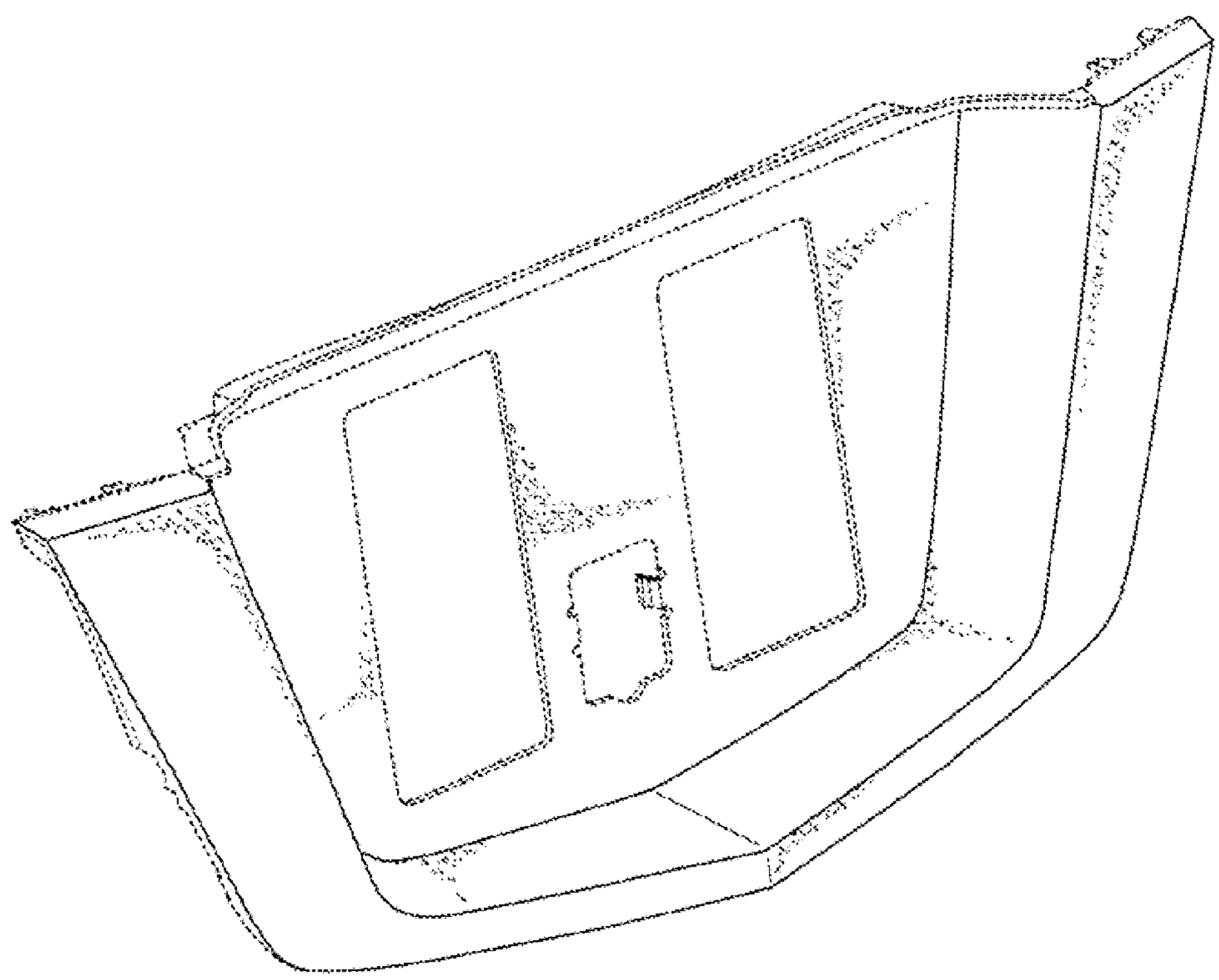

FIG. 1

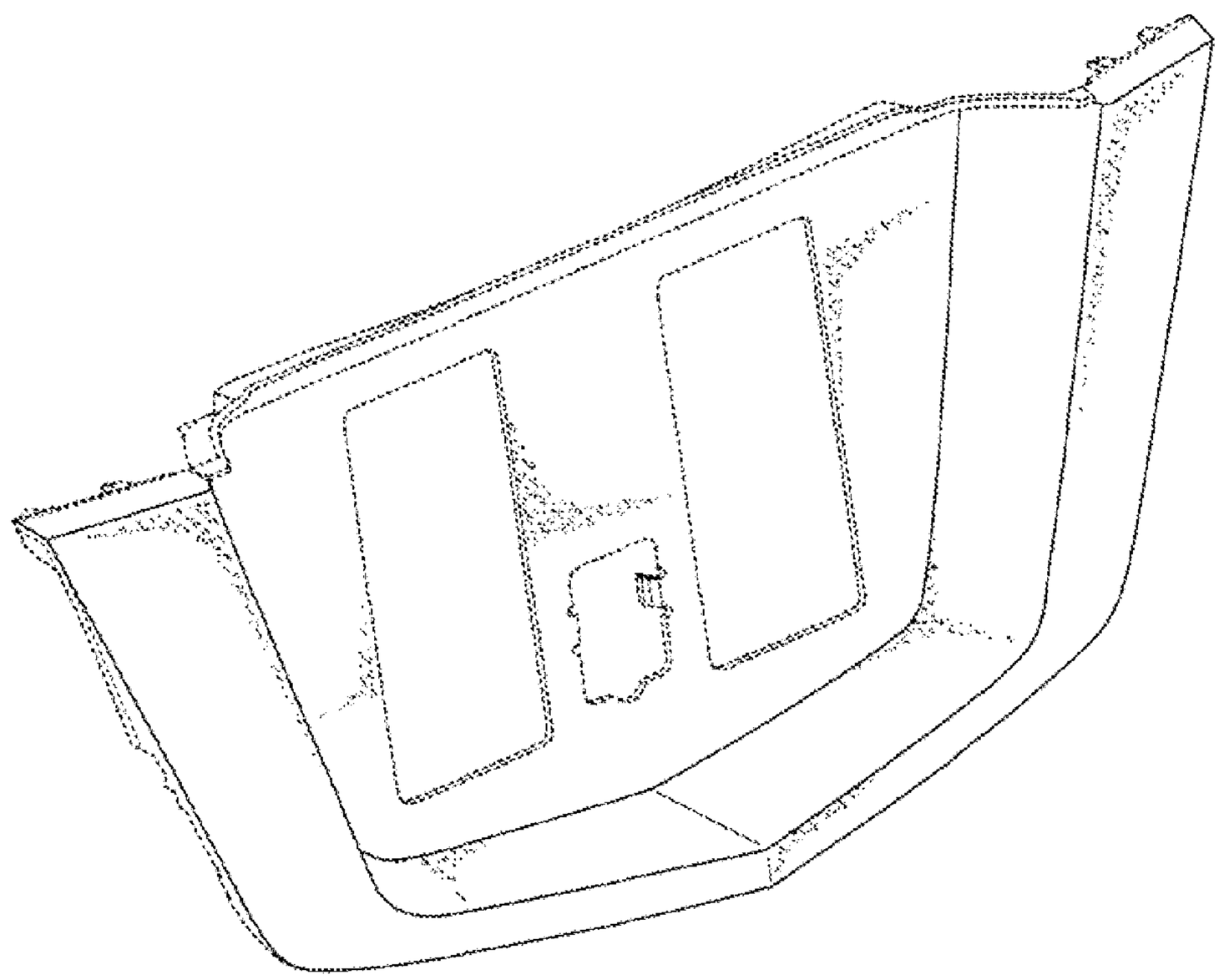

FIG. 2

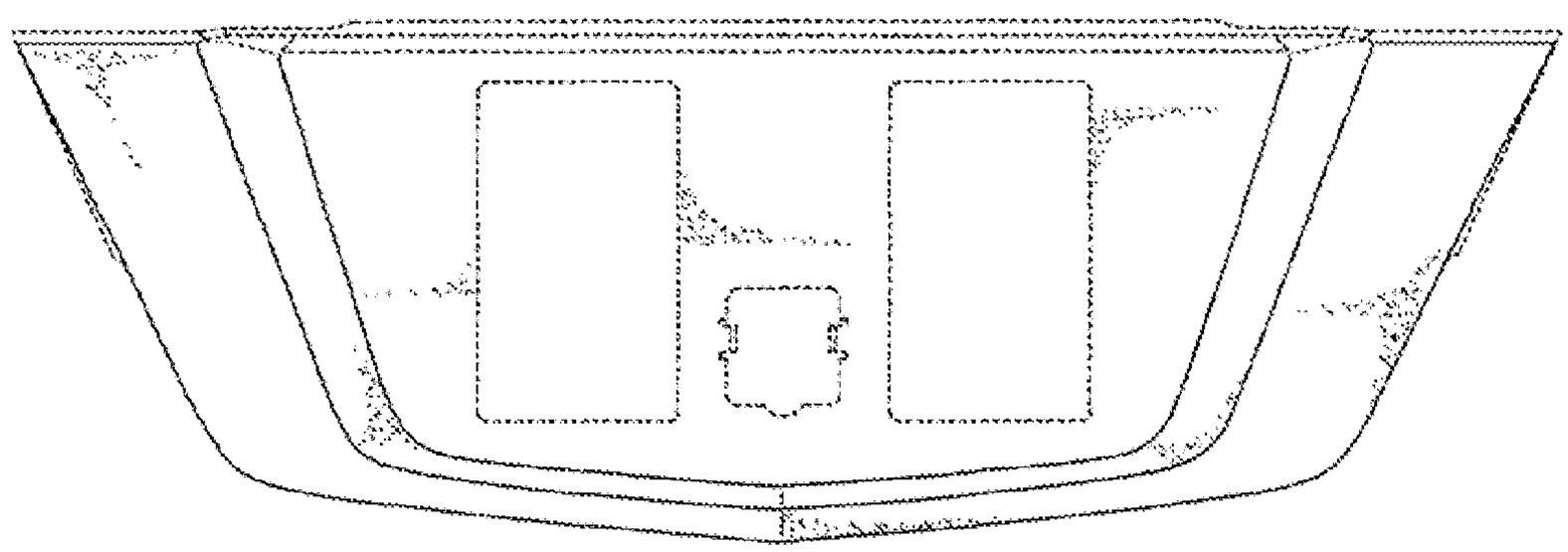

FIG. 3

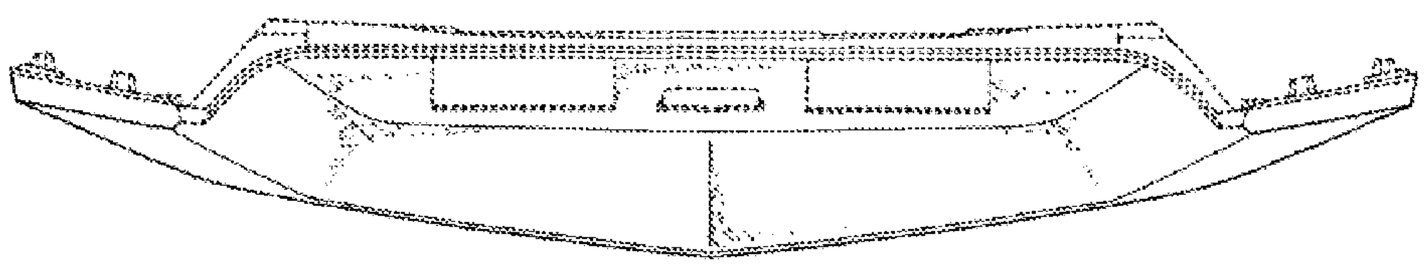
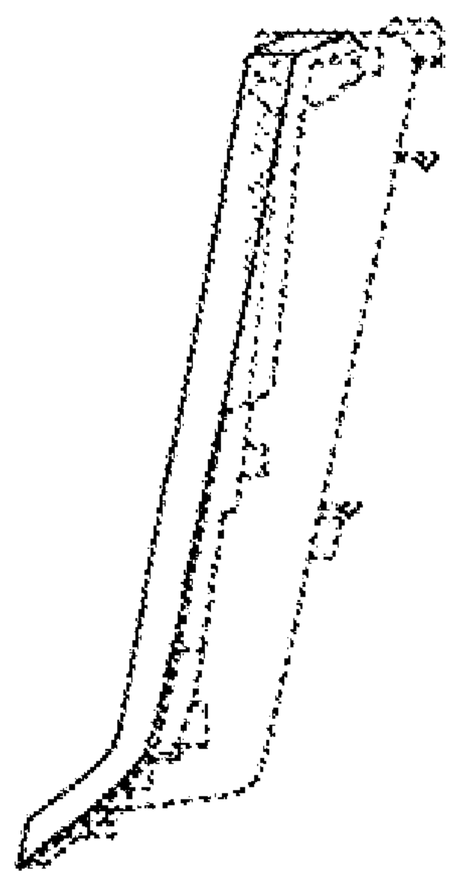
FIG. 4