US00D607048S

(12) United States Design Patent

Egami et al.

(10) Patent No.: US D607,048 S
(45) Date of Patent: ** Dec. 29, 2009

(54) **PRINTER**

(75) Inventors: **Keiichiro Egami**, Nagoya (JP); **Yusuke Nakata**, Nagoya (JP); **Kayo Hasui**, Nagoya (JP)

(73) Assignee: **Brother Industries, Ltd.**, Nagoya (JP)

(**) Term: **14 Years**

(21) Appl. No.: **29/300,514**

(22) Filed: **Apr. 4, 2008**

(30) **Foreign Application Priority Data**

Oct. 5, 2007 (JP) 2007-027315

(51) **LOC (9) Cl.** **14-02**
(52) **U.S. Cl.** **D18/55**
(58) **Field of Classification Search** D18/36–37, D18/50, 54, 54.1, 55, 19; D14/420–425, D14/463–470; 400/613, 613.1–613.4, 690.1–690.4, 400/691–694
See application file for complete search history.

(56) **References Cited**

U.S. PATENT DOCUMENTS

D521,060 S * 5/2006 Katayama D18/55
D521,546 S * 5/2006 Katayama D18/55
D522,569 S * 6/2006 Katayama et al. D18/50
D523,897 S * 6/2006 Iue D18/54
D535,325 S * 1/2007 Yamaguchi D18/55
D549,772 S * 8/2007 Mase et al. D18/55
D562,886 S * 2/2008 Egami et al. D18/55
D578,567 S * 10/2008 Hattori D18/50

* cited by examiner

Primary Examiner—Cathy Anne MacCormac
(74) *Attorney, Agent, or Firm*—Oliff & Berridge, PLC

(57) **CLAIM**

The ornamental design for a printer, as shown and described.

DESCRIPTION

FIG. **1** is a perspective view of a printer;

FIG. **2** is a front view thereof;

FIG. **3** is a top view thereof;

FIG. **4** is a right-side view thereof; and,

FIG. **5** is a left-side view thereof.

The broken lines depict environmental subject matter only and form no part of the claimed design.

1 Claim, 4 Drawing Sheets

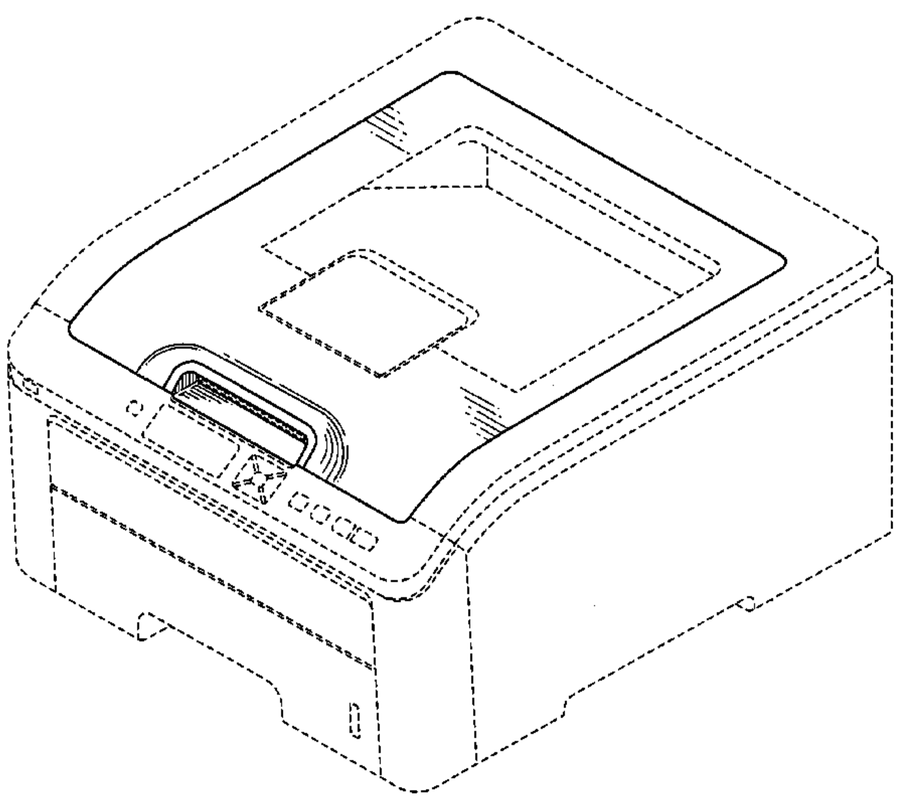

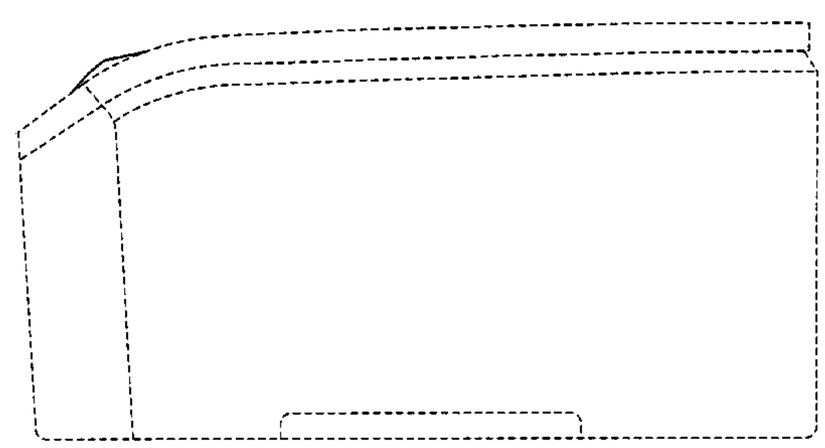

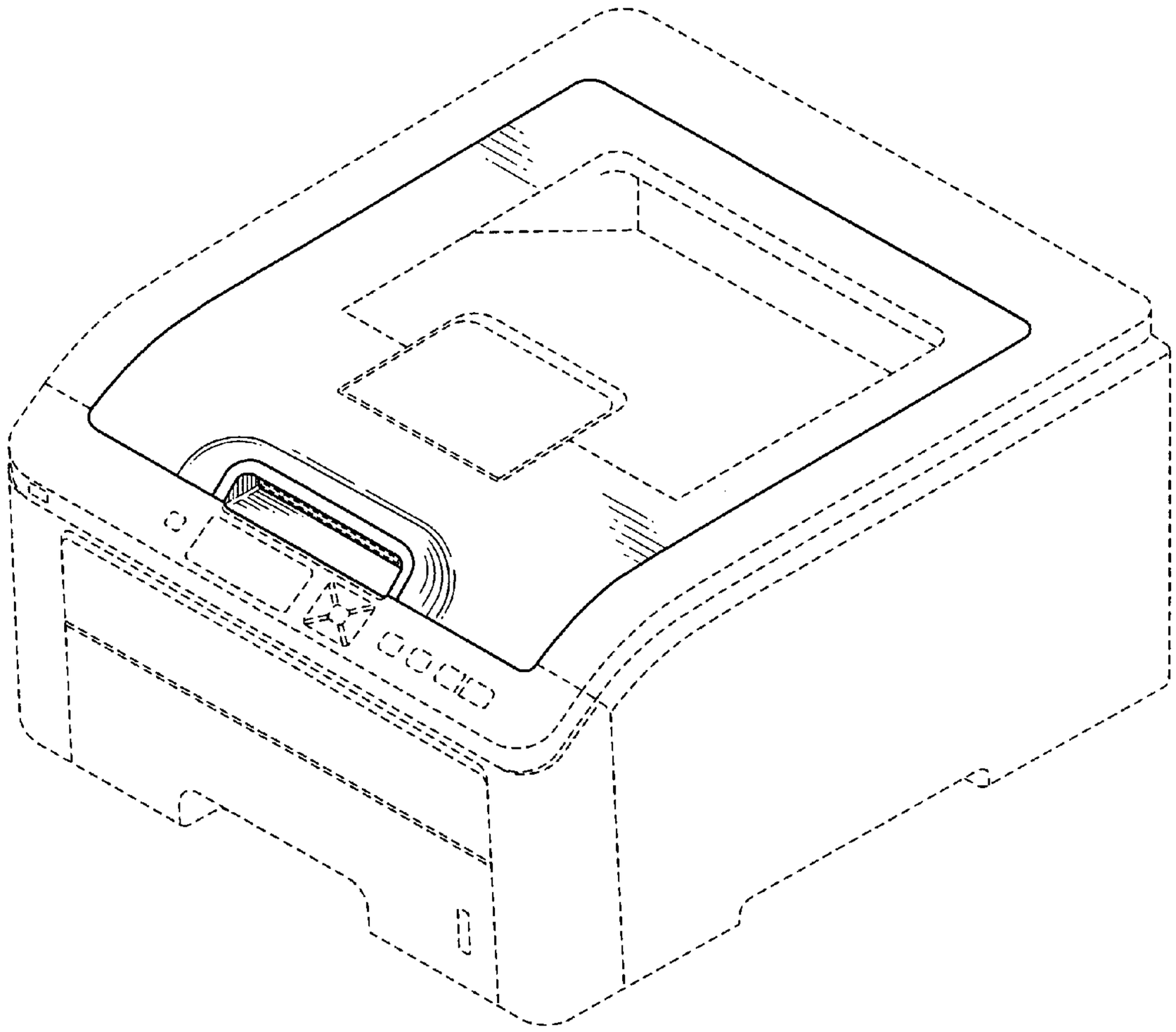

FIG. 1

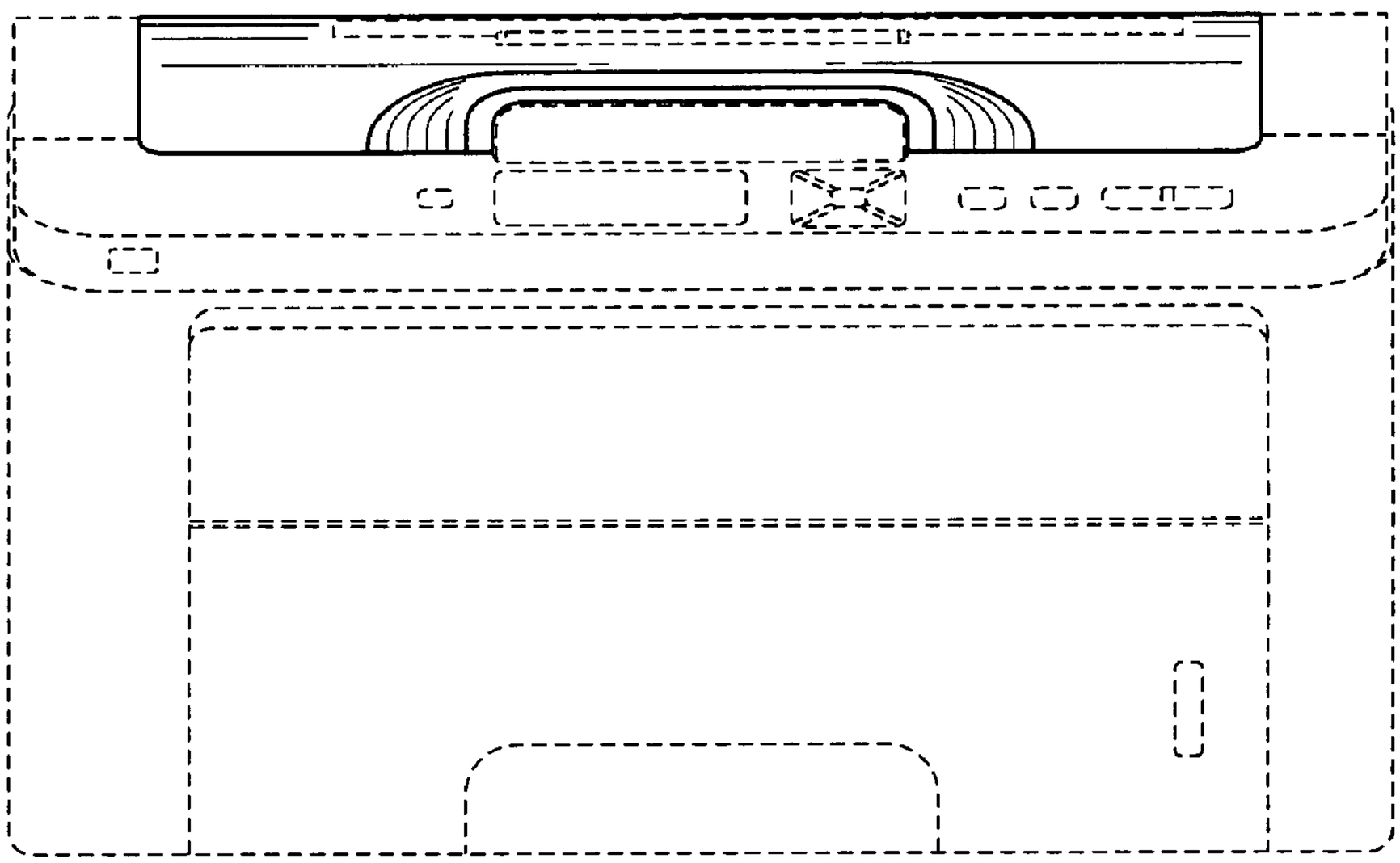

FIG. 2

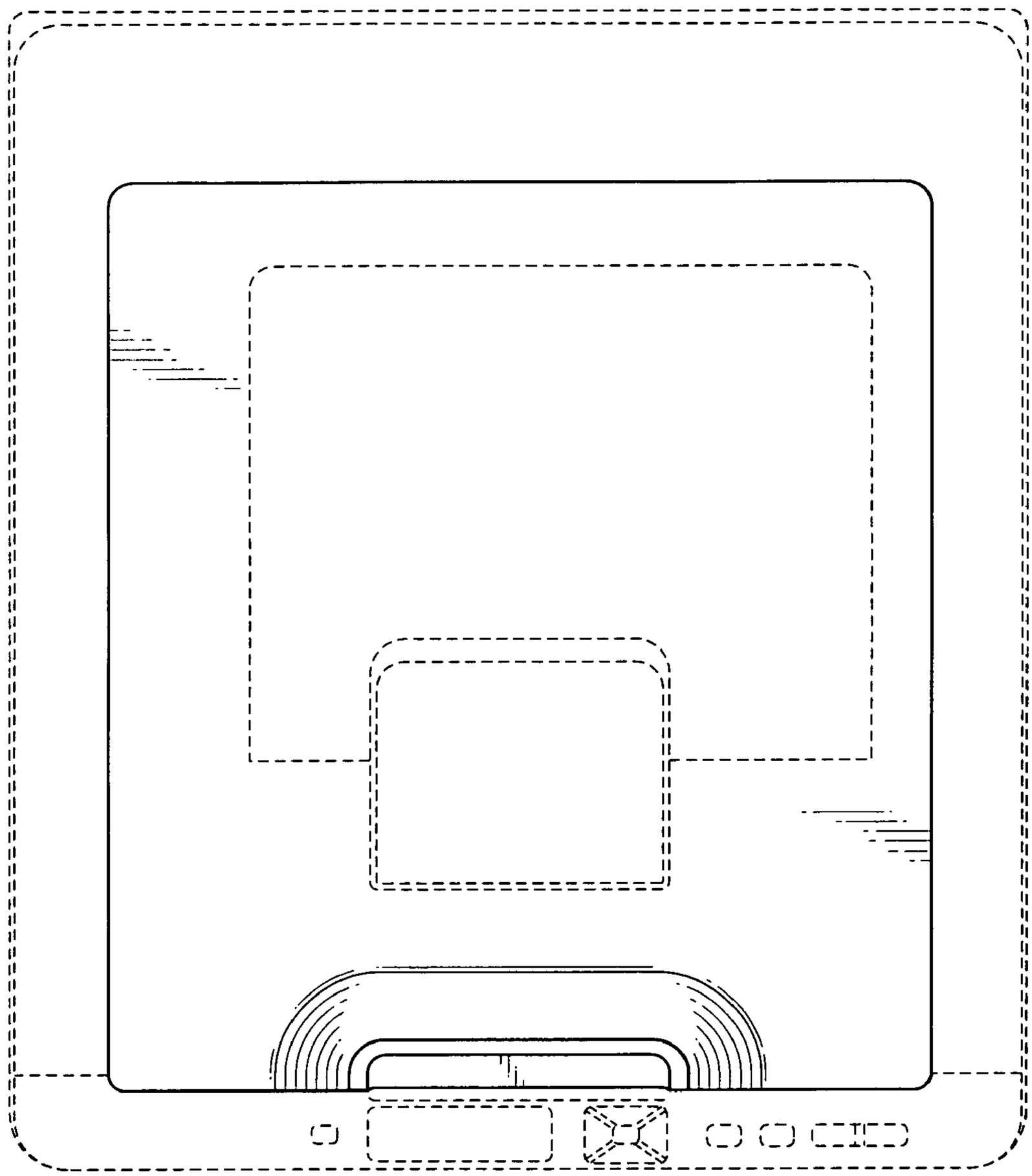

FIG. 3

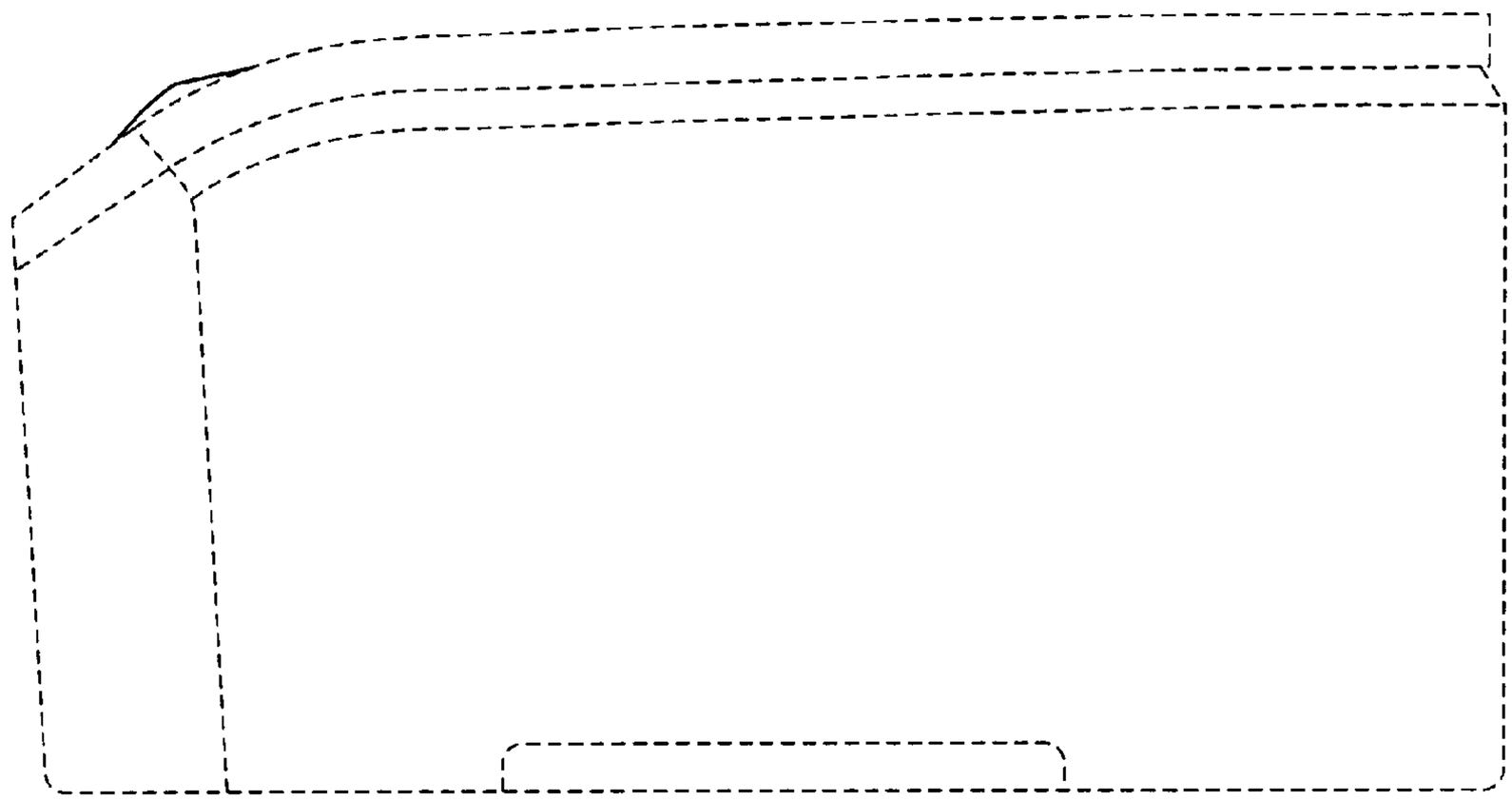

FIG. 4

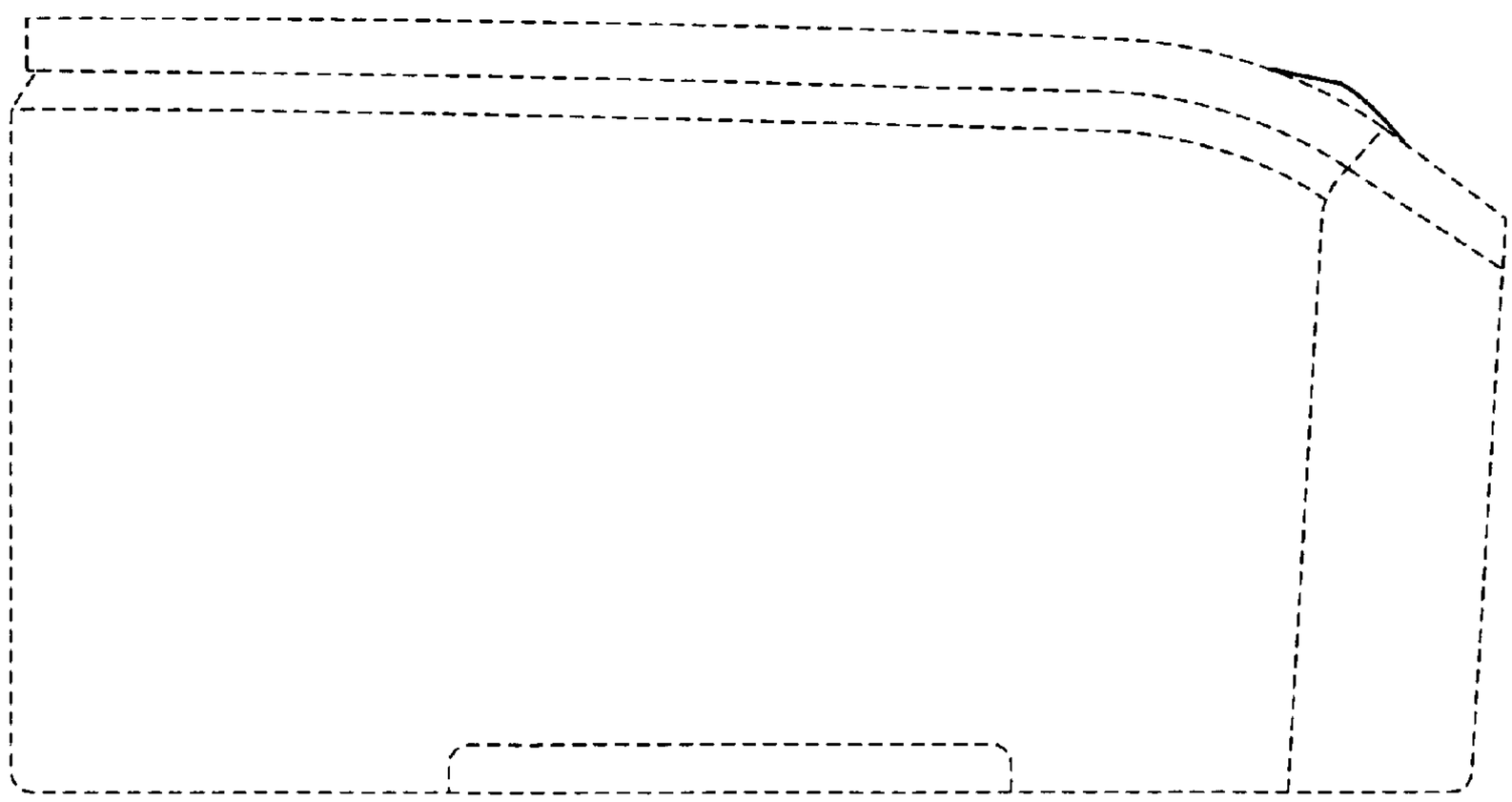

FIG. 5