US00D604371S

(12) United States Design Patent
Stevens

(10) Patent No.: US D604,371 S
(45) Date of Patent: ** Nov. 17, 2009

(54) **ANTI-JAM MECHANISM FOR A PAINTBALL LOADER**

(75) Inventor: **Simon Benjamin Stevens**, Sewell, NJ (US)

(73) Assignee: **Kee Action Sports I LLC**, Sewell, NJ (US)

(**) Term: **14 Years**

(21) Appl. No.: **29/323,718**

(22) Filed: **Aug. 29, 2008**

(51) **LOC (9) Cl.** **21-01**
(52) **U.S. Cl.** **D21/573**
(58) **Field of Classification Search** D21/567, D21/570–575; D22/100, 101, 103, 104, D22/108, 109; 124/41.1, 45, 49, 50, 51.1, 124/55, 56, 69, 70–79, 80, 82; 42/54; 446/401, 446/405, 406

See application file for complete search history.

(56) **References Cited**

U.S. PATENT DOCUMENTS

1,403,689 A 1/1922 Hyndman

(Continued)

FOREIGN PATENT DOCUMENTS

DE 876370 5/1953

(Continued)

Primary Examiner—Holly H Baynham
Assistant Examiner—Cynthia M Chin
(74) *Attorney, Agent, or Firm*—Volpe and Koenig, P.C.

(57) **CLAIM**

The ornamental design for an anti-jam mechanism for a paintball loader, as shown and described.

DESCRIPTION

FIG. **1** is a rear perspective view of an anti-jam for a paintball loader having the design of the present invention;

FIG. **2** is a top plan view of the anti-jam for a paintball loader shown in FIG. **1**;

FIG. **3** is a bottom view of the anti-jam for a paintball loader shown in FIG. **1**;

FIG. **4** is a front elevational view of the anti-jam for a paintball loader shown in FIG. **1**;

FIG. **5** is a left side elevational view of the anti-jam for a paintball loader shown in FIG. **1**; and

FIG. **6** is a rear elevational view the anti-jam for a paintball loader shown in FIG. **1**; and,

FIG. **7** is a right side elevational view of the anti-jam for a paintball loader shown in FIG. **1**.

1 Claim, 7 Drawing Sheets

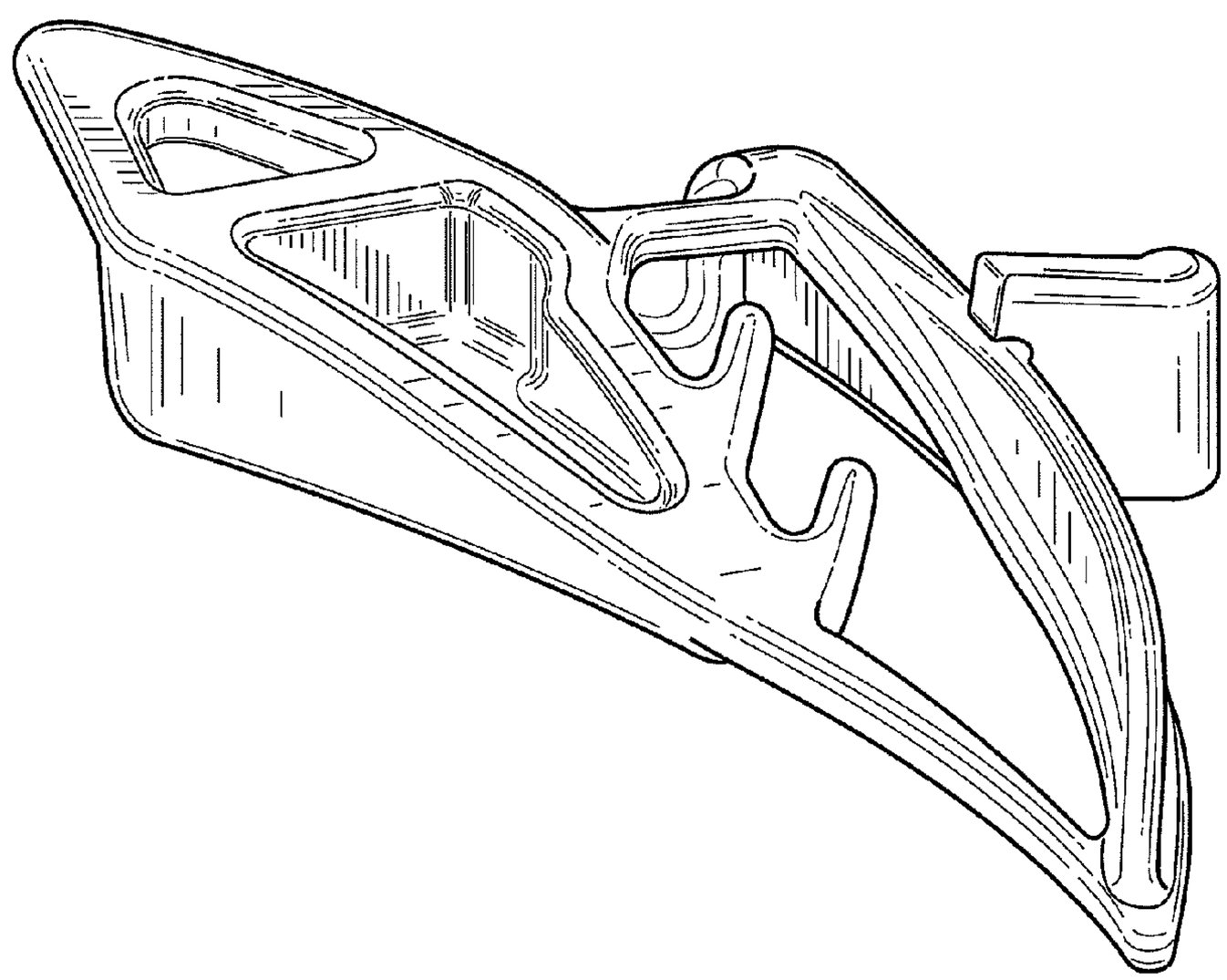

U.S. PATENT DOCUMENTS

1,403,719 A 1/1922 Szepe
1,404,689 A 1/1922 Fairweather
1,743,576 A 1/1930 Bigham
1,867,513 A 7/1932 Johannes
1,954,093 A 4/1934 Nelson
2,307,015 A 1/1943 Boynton
2,357,951 A 9/1944 Hale
2,398,263 A 4/1946 Trimbach
2,639,904 A 5/1953 McMaster
2,641,412 A 6/1953 Byberg
3,248,008 A 4/1966 Meierjohan
3,384,354 A 5/1968 Albrecht et al.
3,467,073 A 9/1969 Rhodes
3,610,223 A 10/1971 Green
3,695,246 A 10/1972 Filippi et al.
3,788,298 A 1/1974 Hale
3,789,891 A 2/1974 Bosch
3,844,267 A 10/1974 Mohr
3,855,988 A 12/1974 Sweeton
3,867,921 A 2/1975 Politzer
4,027,646 A 6/1977 Sweeton
4,185,824 A 1/1980 Natwick
4,207,857 A 6/1980 Balka, Jr.
4,332,097 A 6/1982 Taylor, Jr.
4,646,709 A 3/1987 Kholin
4,759,435 A 7/1988 Cedrone
4,819,609 A 4/1989 Tippmann
4,850,330 A 7/1989 Nagayoshi
4,896,646 A 1/1990 Kahelin et al.
4,926,742 A 5/1990 Ma et al.
4,930,400 A 6/1990 Brandl et al.
4,936,282 A 6/1990 Dobbins et al.
4,951,548 A 8/1990 Wixon et al.
4,951,644 A 8/1990 Bon
4,965,951 A 10/1990 Miller et al.
4,986,251 A 1/1991 Lilley
4,993,400 A 2/1991 Fitzwater
5,063,905 A 11/1991 Farrell
5,097,816 A 3/1992 Miller
5,097,985 A 3/1992 Jones
5,166,457 A 11/1992 Lorenzetti
5,282,454 A 2/1994 Bell et al.
5,335,579 A 8/1994 David
5,353,712 A 10/1994 Olsen
5,361,746 A 11/1994 Szente
5,383,442 A 1/1995 Tippmann
5,456,153 A 10/1995 Bentley et al.
5,490,493 A 2/1996 Salansky
5,497,758 A 3/1996 Dobbins et al.
5,505,188 A 4/1996 Williams
5,511,333 A 4/1996 Farrell
5,520,171 A 5/1996 David
5,542,570 A 8/1996 Nottingham et al.
5,561,258 A 10/1996 Bentley et al.
5,600,083 A 2/1997 Bentley et al.
5,722,383 A 3/1998 Tippmann
5,727,538 A 3/1998 Ellis
5,736,720 A 4/1998 Bell et al.
5,749,797 A 5/1998 Sunseri et al.
5,771,875 A 6/1998 Sullivan
5,784,985 A 7/1998 Lodico et al.
5,791,325 A 8/1998 Anderson
5,794,606 A 8/1998 Deak
5,809,983 A 9/1998 Stoneking
5,816,232 A * 10/1998 Bell 124/51.1
5,839,422 A 11/1998 Ferris
5,881,962 A 3/1999 Schmidt et al.
5,887,578 A 3/1999 Backeris et al.
5,947,100 A 9/1999 Anderson
5,954,042 A 9/1999 Harvey
6,032,395 A 3/2000 Bentley et al.
6,055,975 A 5/2000 Gallagher et al.
6,109,252 A 8/2000 Stevens
6,206,562 B1 3/2001 Eyraud et al.
6,213,110 B1 4/2001 Christopher et al.
6,220,237 B1 4/2001 Johnson et al.
6,305,367 B1 10/2001 Kotsiopoulos
6,327,953 B1 12/2001 Andresen
6,347,621 B1 2/2002 Guthrie
6,374,819 B1 4/2002 Ming-Hsien
6,408,836 B1 6/2002 Ming-Hsien
6,408,837 B1 6/2002 Johnson et al.
D459,767 S 7/2002 Rushton
6,415,781 B1 7/2002 Perrone
6,418,919 B1 7/2002 Perrone
6,425,781 B1 7/2002 Bernstein et al.
6,460,530 B1 10/2002 Backeris et al.
6,467,473 B1 10/2002 Kotsiopoulos
6,468,879 B1 10/2002 Lamure et al.
6,481,432 B2 11/2002 Rushton et al.
6,488,019 B2 12/2002 Kotsiopoulos
6,502,567 B1 * 1/2003 Christopher et al. 124/51.1
6,526,955 B1 3/2003 Juan
6,588,412 B2 7/2003 Ferrara et al.
6,591,824 B2 7/2003 Hatcher
6,609,511 B2 8/2003 Kotsiopoulos
6,615,814 B1 9/2003 Rice et al.
6,644,293 B2 11/2003 Jong
6,684,873 B1 2/2004 Anderson
6,701,907 B2 3/2004 Christopher et al.
6,708,685 B2 3/2004 Masse
6,725,852 B1 4/2004 Yokota
6,729,321 B2 5/2004 Ho
6,729,497 B2 5/2004 Rice et al.
6,739,322 B2 5/2004 Rice et al.
6,739,323 B2 5/2004 Tippmann, Jr.
6,742,512 B1 6/2004 Ho
6,752,137 B2 6/2004 Brunette
6,792,933 B2 * 9/2004 Christopher et al. 124/56
6,802,306 B1 10/2004 Rice
6,860,258 B2 * 3/2005 Farrell 124/51.1
6,889,680 B2 5/2005 Christopher et al.
6,915,792 B1 7/2005 Sheng
6,978,776 B2 12/2005 Hamilton
6,981,493 B1 1/2006 Poteracku
7,017,569 B2 3/2006 Jong
7,021,302 B2 4/2006 Neumaster
7,077,118 B2 7/2006 Lewis
D535,339 S 1/2007 Broersma
7,159,585 B2 1/2007 Quinn et al.
D544,047 S 6/2007 Bell et al.
7,234,456 B2 6/2007 Andresen
7,270,121 B2 9/2007 Lubben
7,343,909 B2 3/2008 Christopher
D567,302 S 4/2008 Choi
D567,303 S 4/2008 Neumaster
2002/0059927 A1 5/2002 Woods
2003/0079731 A1 5/2003 Dobbins
2004/0112356 A1 6/2004 Hatcher
2004/0211402 A1 10/2004 Christopher et al.
2004/0245276 A1 12/2004 Hashimoto et al.
2005/0121015 A1 6/2005 Postorivo, Jr.
2005/0188974 A1 9/2005 Pedicini et al.
2005/0241628 A1 11/2005 Hatcher
2005/0274370 A1 12/2005 Lubben
2005/0284456 A1 12/2005 Chipley
2005/0284457 A1 12/2005 Hatcher
2006/0005823 A1 1/2006 Quinn
2006/0032488 A1 2/2006 Telford
2006/0037597 A1 2/2006 Wood
2006/0054151 A1 3/2006 Christopher et al.
2006/0086347 A1 4/2006 Hedberg
2006/0124118 A1 6/2006 Dobbins
2006/0196489 A1 9/2006 Campo

2006/0249131	A1	11/2006	Broersma	
2006/0254572	A1	11/2006	Hall	
2007/0017495	A1	1/2007	Andresen	
2007/0056573	A1 *	3/2007	Campo	124/49
2007/0062506	A1	3/2007	Bell	
2007/0101981	A1	5/2007	Chen	
2007/0113834	A1	5/2007	Spicer	
2007/0137631	A1	6/2007	Christopher	
2007/0181117	A1 *	8/2007	Tippmann et al.	124/74
2007/0246479	A1	10/2007	Andresen	
2008/0017178	A1 *	1/2008	Marques et al.	124/51.1

FOREIGN PATENT DOCUMENTS

DE	3721527	1/1989
DE	4343870	6/1994
DE	19922589	12/2000
EP	01054228	11/2000
EP	01653189	5/2006
FR	921527	5/1947
GB	2322438	8/1998
JP	1179898	7/1989
WO	98/13660	4/1998
WO	01/44745	6/2001
WO	02/42708	5/2002
WO	07/035601	3/2007

* cited by examiner

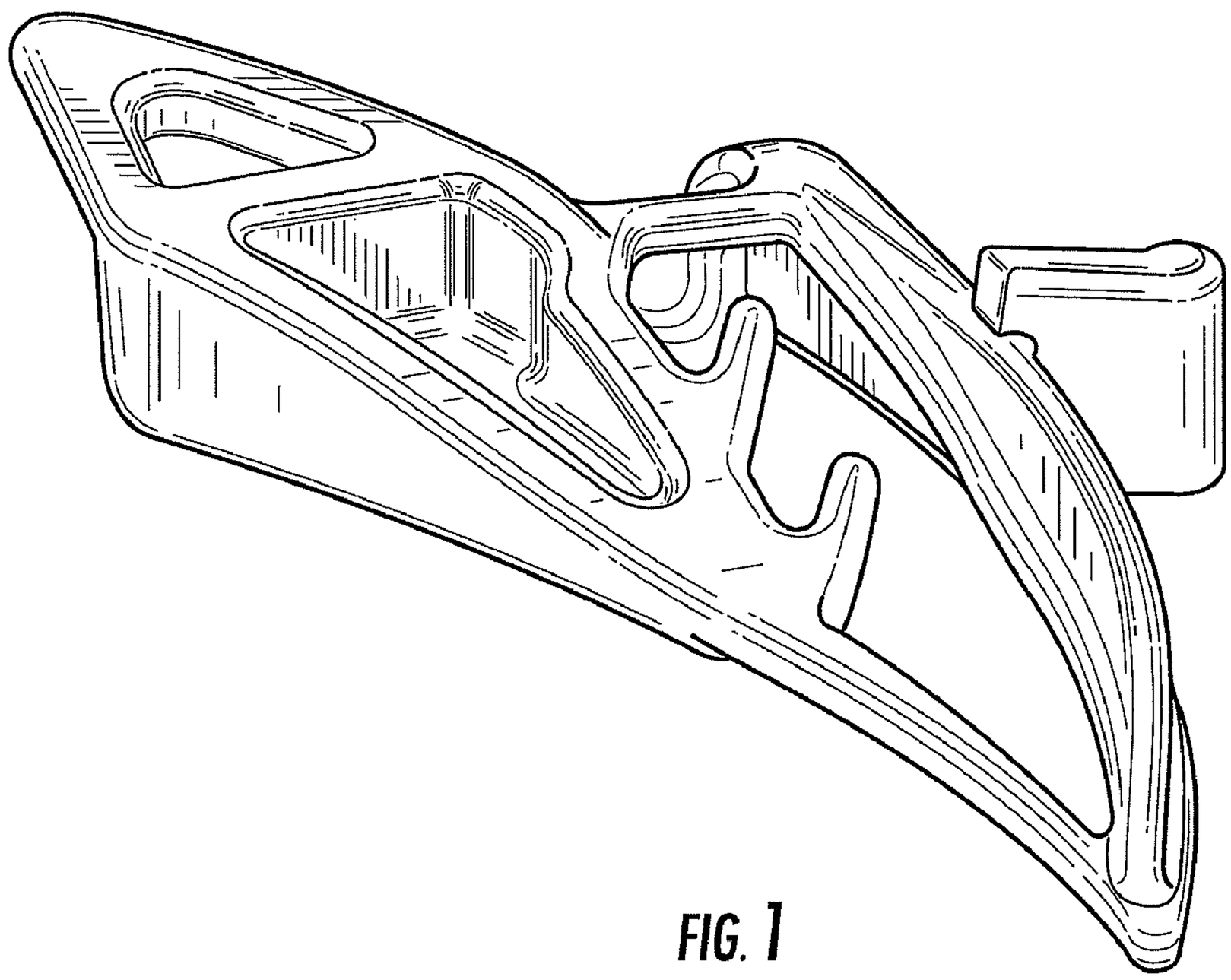

FIG. 1

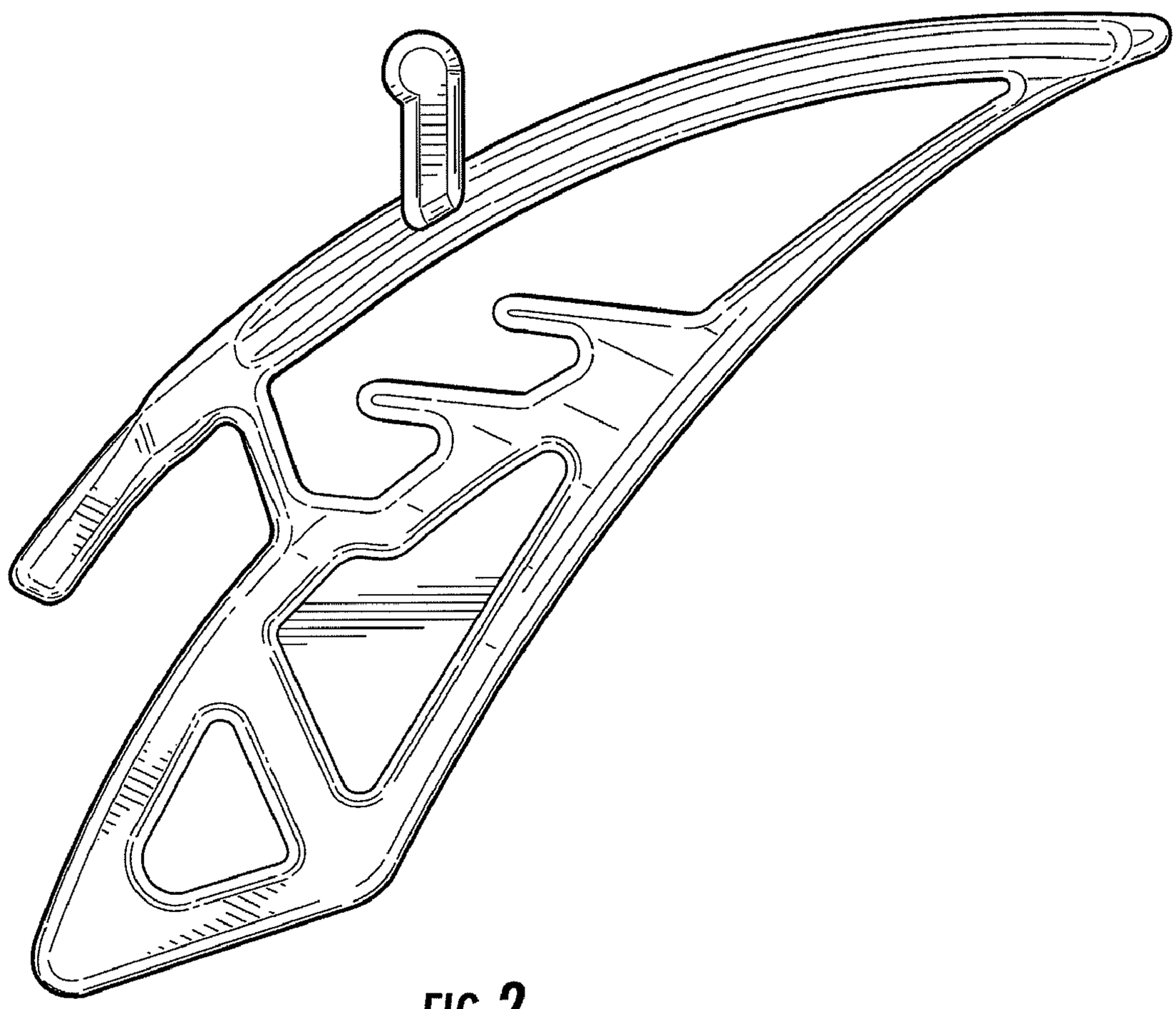

FIG. 2

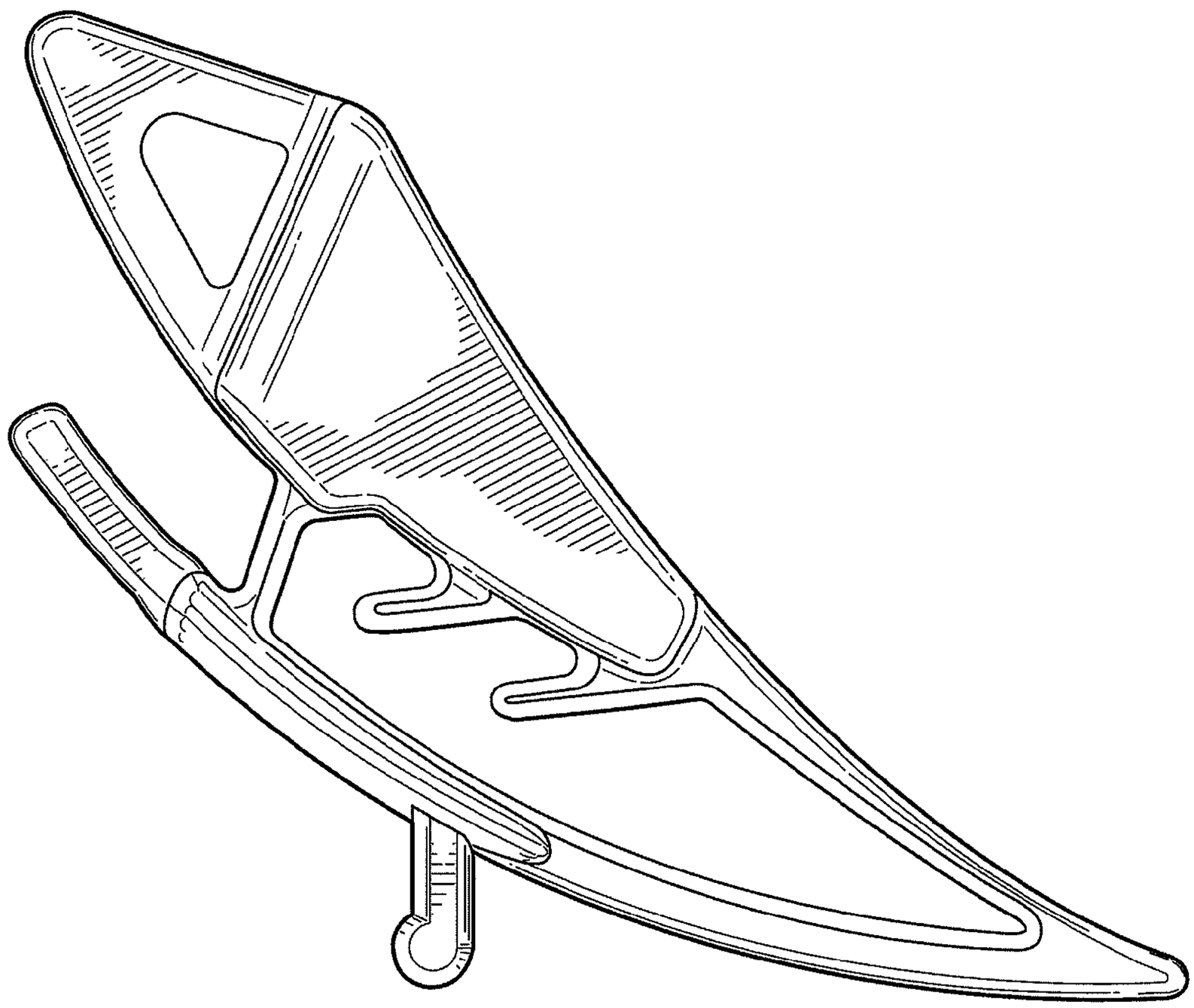

FIG. 3

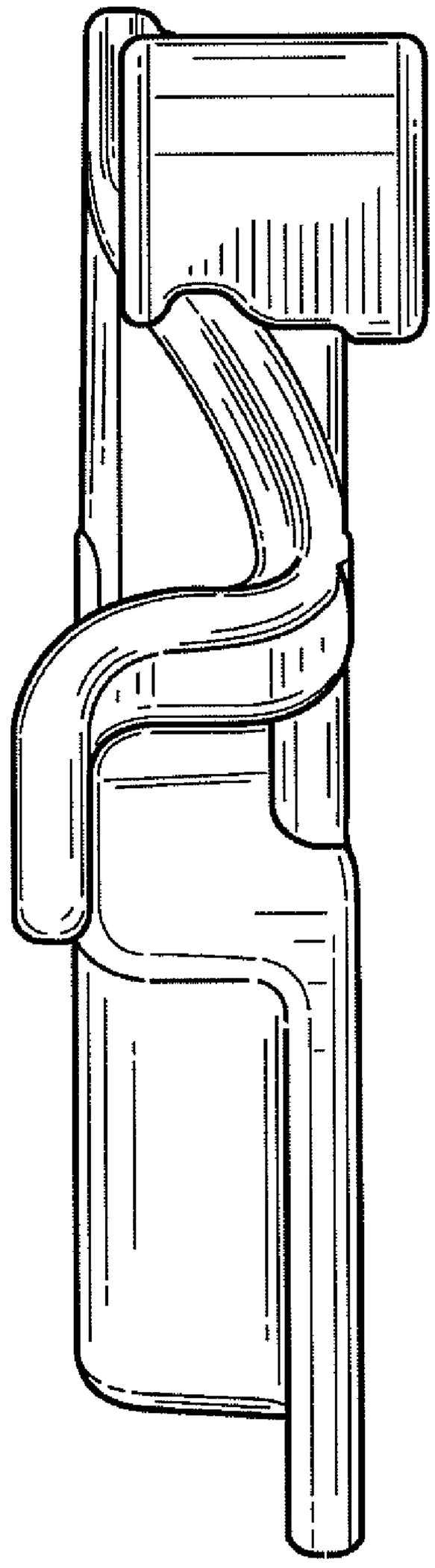

FIG. 4

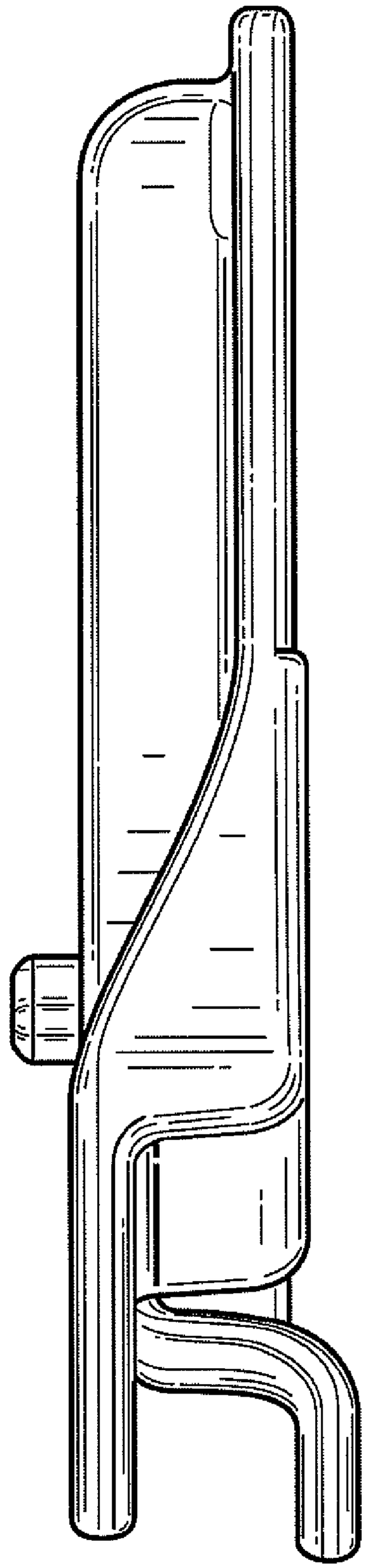

FIG. 5

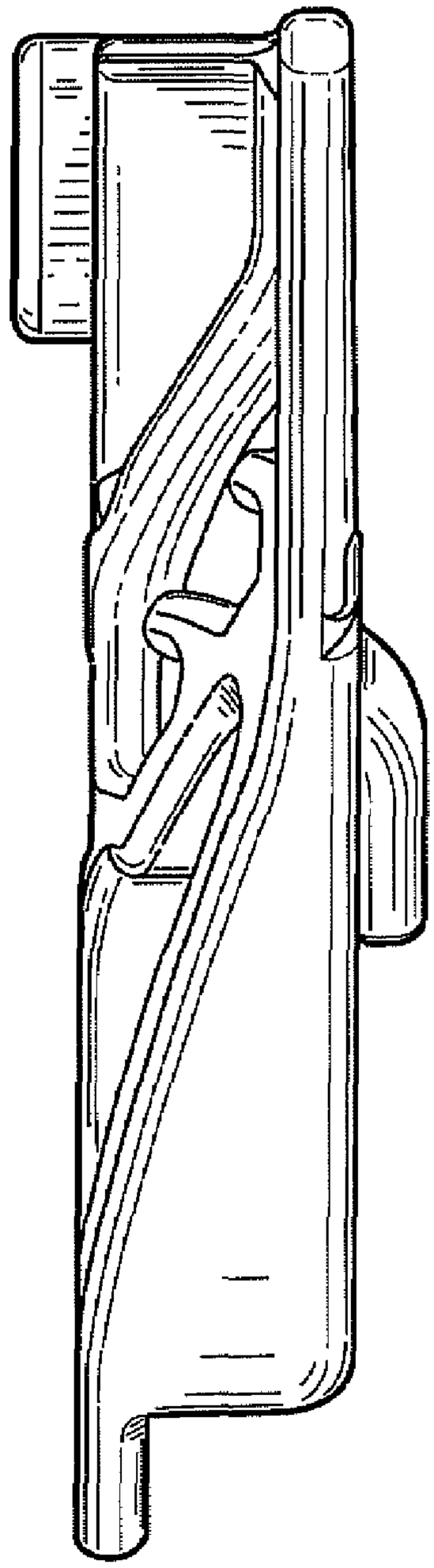

FIG. 6

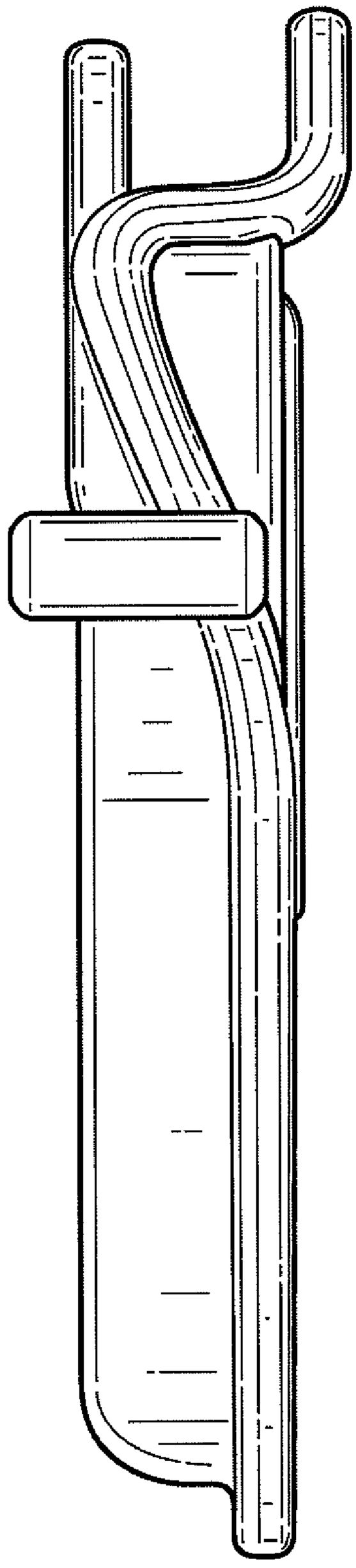

FIG. 7