US00D603277S

(12) United States Design Patent

Clausen et al.

(10) Patent No.: US D603,277 S
(45) Date of Patent: ** Nov. 3, 2009

(54) **THERMOSTAT WITH DISPLAY**

(75) Inventors: **Anders Ø. Clausen**, Ry (DK); **Bjarne Frederiksen**, Silkeborg (DK)

(73) Assignee: **Danfoss A/S**, Nordborg (DK)

(**) Term: **14 Years**

(21) Appl. No.: **29/331,996**

(22) Filed: **Feb. 6, 2009**

(30) **Foreign Application Priority Data**

Aug. 7, 2008 (EM) 000983523

(51) **LOC (9) Cl.** **10-04**
(52) **U.S. Cl.** **D10/50**
(58) **Field of Classification Search** ..... D10/49–50; 236/5, 46 R–46 F, 47, 49.3, 51, 84, 94; 340/7.21–7.24, 340/732, 825.6, 825.72, 539.1, 539.14, 539.21, 340/539.26, 426.21, 584.589, 870.17; 374/167; 400/485; 455/420, 226.1
See application file for complete search history.

(56) **References Cited**

U.S. PATENT DOCUMENTS

D156,286	S	*	11/1949	Donaldson	D10/50
D184,854	S	*	4/1959	Smith	D6/379
D503,630	S	*	4/2005	Bertolotti	D10/50
D516,926	S	*	3/2006	Roher et al.	D10/50

* cited by examiner

Primary Examiner—Antoine D Davis
(74) *Attorney, Agent, or Firm*—McCormick, Paulding & Huber LLP

(57) **CLAIM**

The ornamental design for a thermostat with display, substantially as shown and described.

DESCRIPTION

FIG. **1** is a top, right-hand side perspective view of a thermostat with display comprising a first embodiment of a new, original and ornamental design;

FIG. **2** is a front view of a thermostat with display comprising the first embodiment of the new, original and ornamental design, the rear, right-hand side and left-hand side views being mirror images thereof;

FIG. **3** is a top view of a thermostat with display comprising the first embodiment of the new, original and ornamental design;

FIG. **4** is a bottom view of a thermostat with display comprising the first embodiment of the new, original and ornamental design;

FIG. **5** is a top, right-hand side perspective view of a thermostat with display comprising a second embodiment of a new, original and ornamental design;

FIG. **6** is a front view of a thermostat with display comprising the second embodiment of the new, original and ornamental design;

FIG. **7** is a top view of a thermostat with display comprising the second embodiment of the new, original and ornamental design; and,

FIG. **8** is a bottom view of a thermostat with display comprising the second embodiment of the new, original and ornamental design.

The broken lines shown in the drawings illustrate unclaimed portions of the article and form no part of the claimed design.

1 Claim, 4 Drawing Sheets

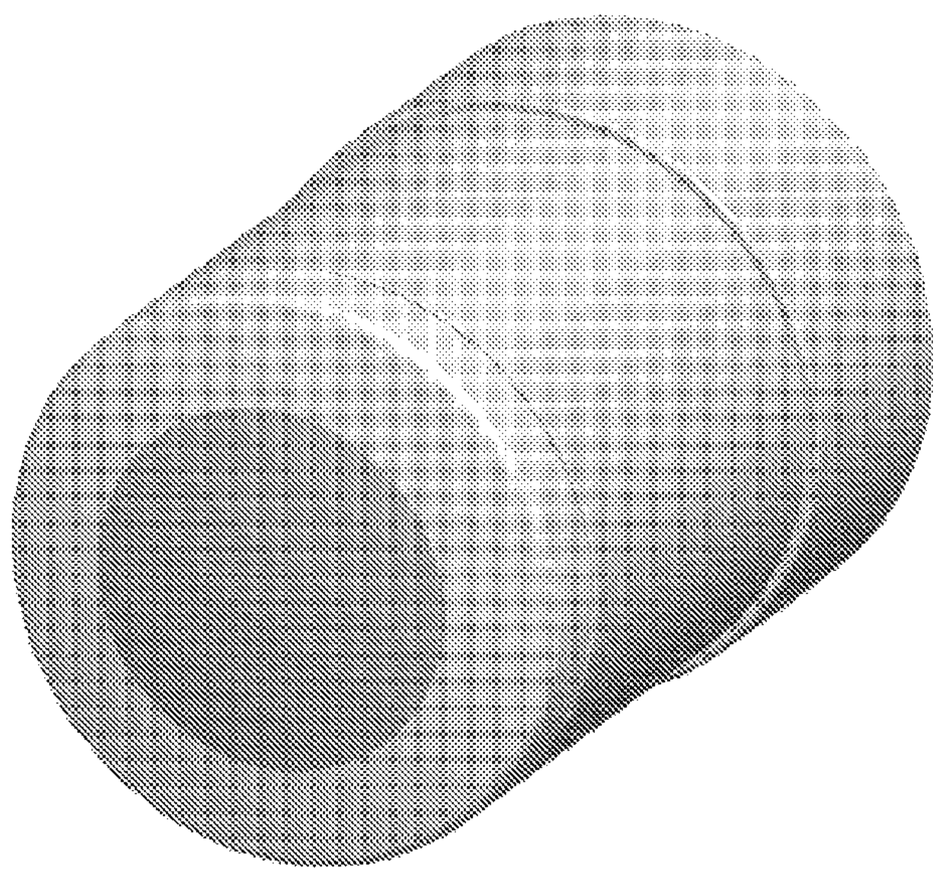

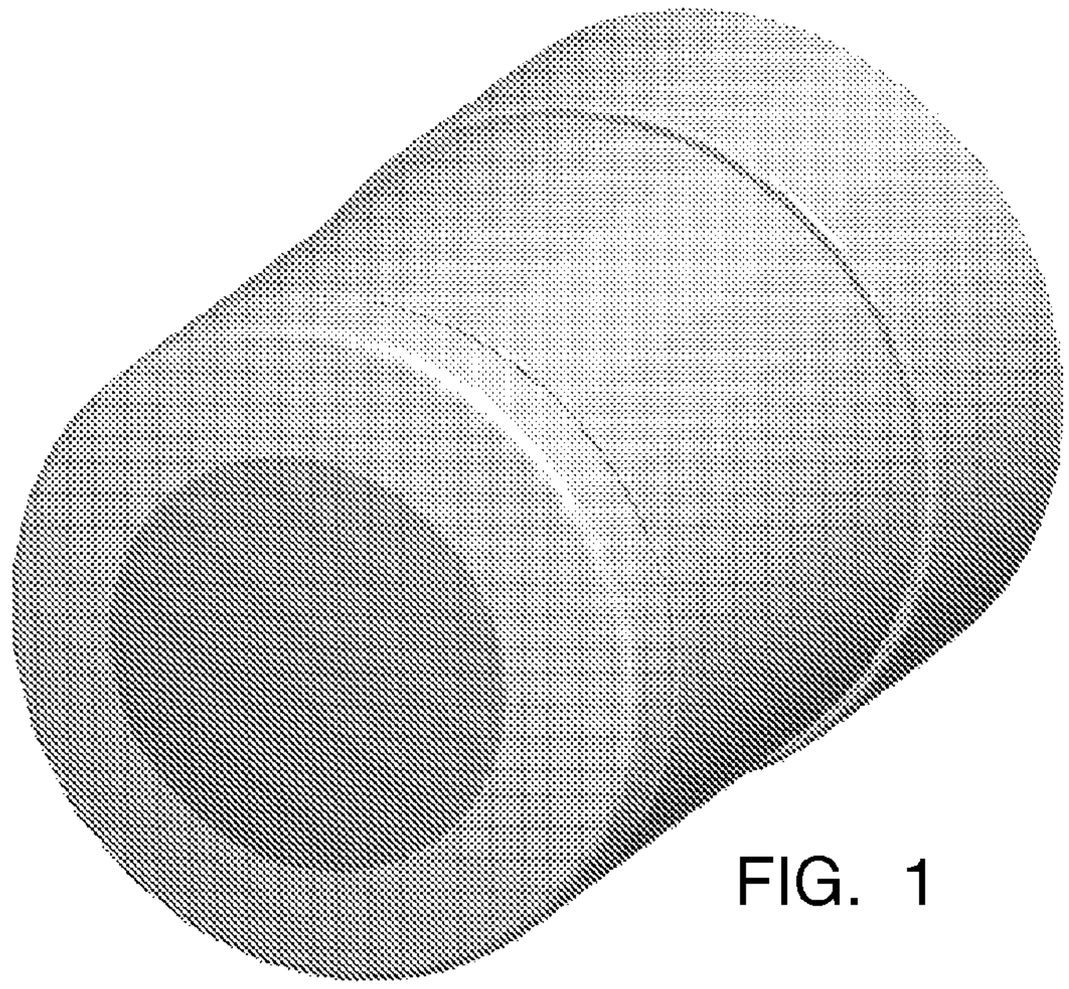

FIG. 1

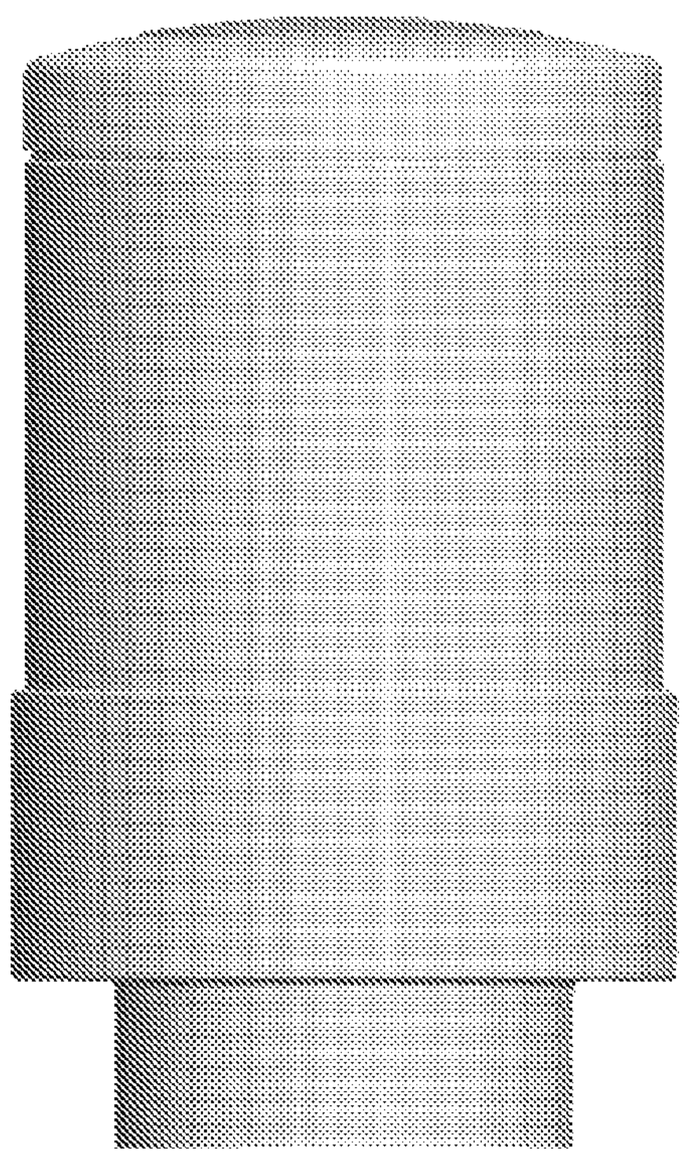

FIG. 2

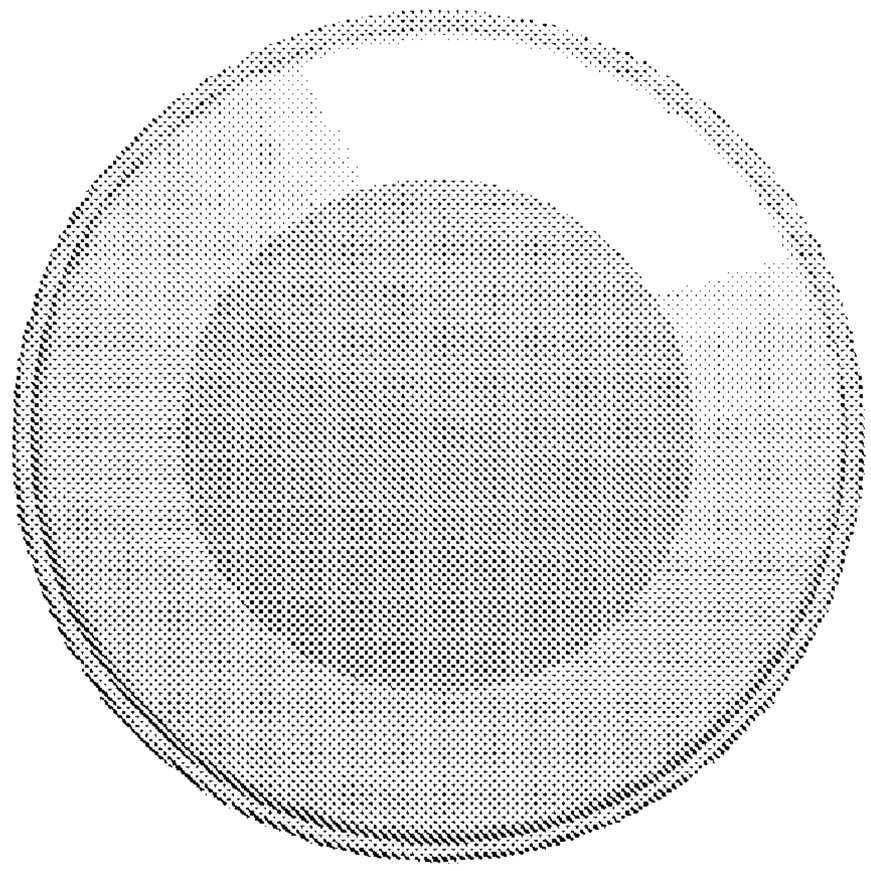

FIG. 3

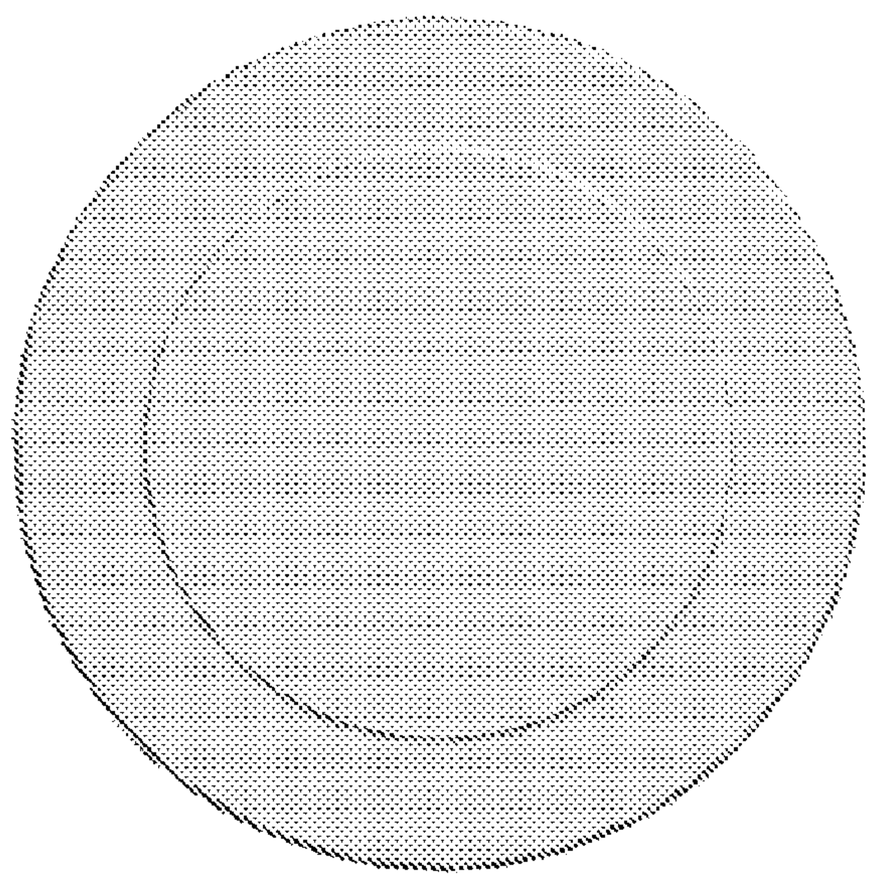

FIG. 4

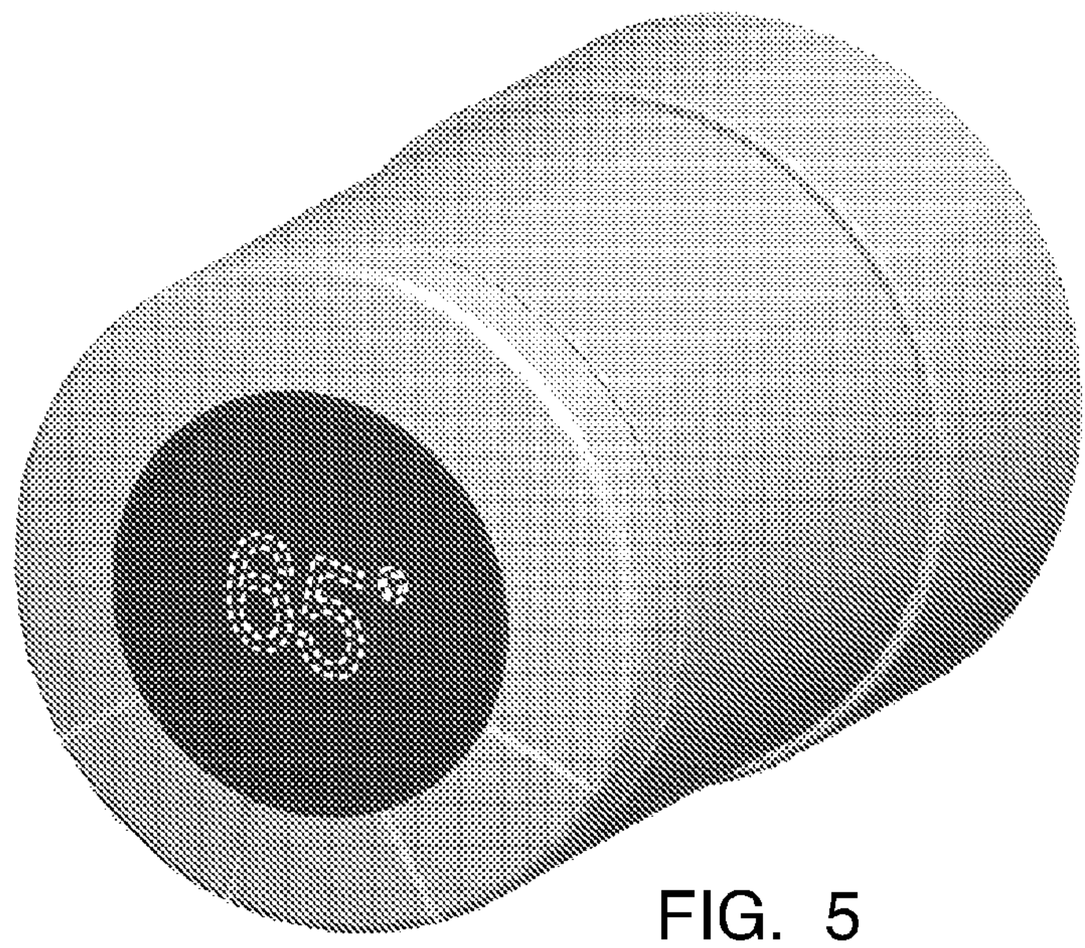

FIG. 5

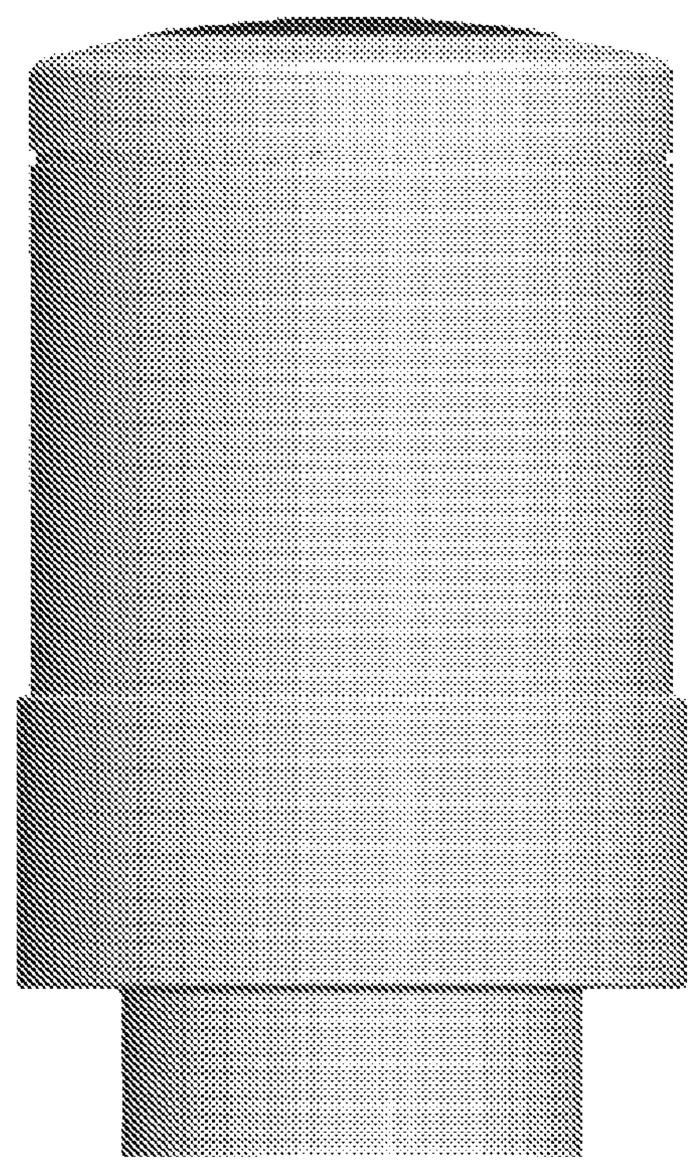

FIG. 6

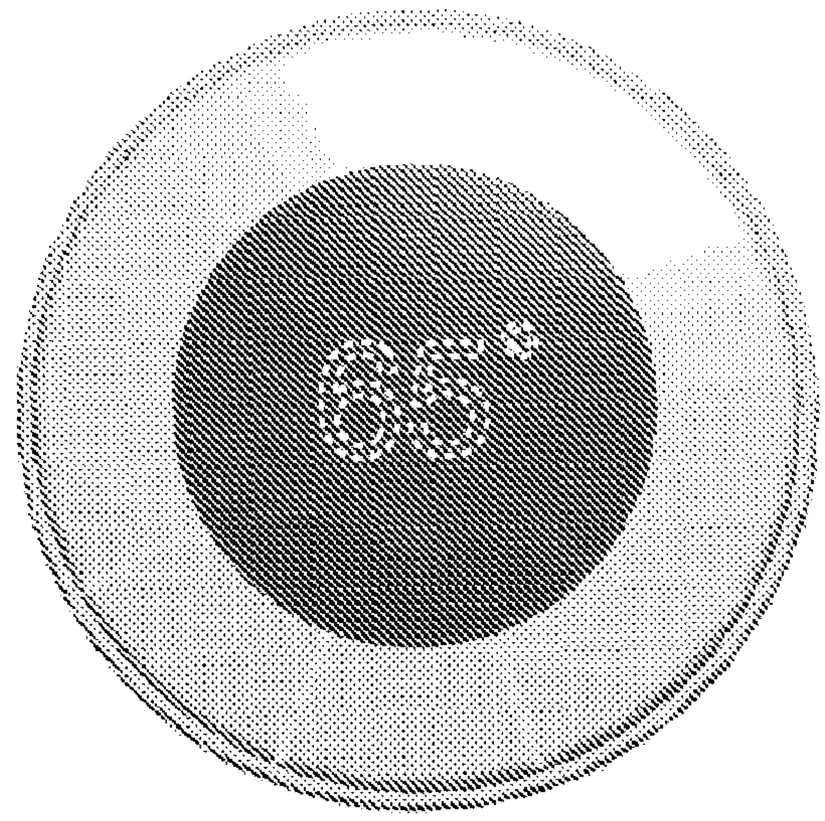

FIG. 7

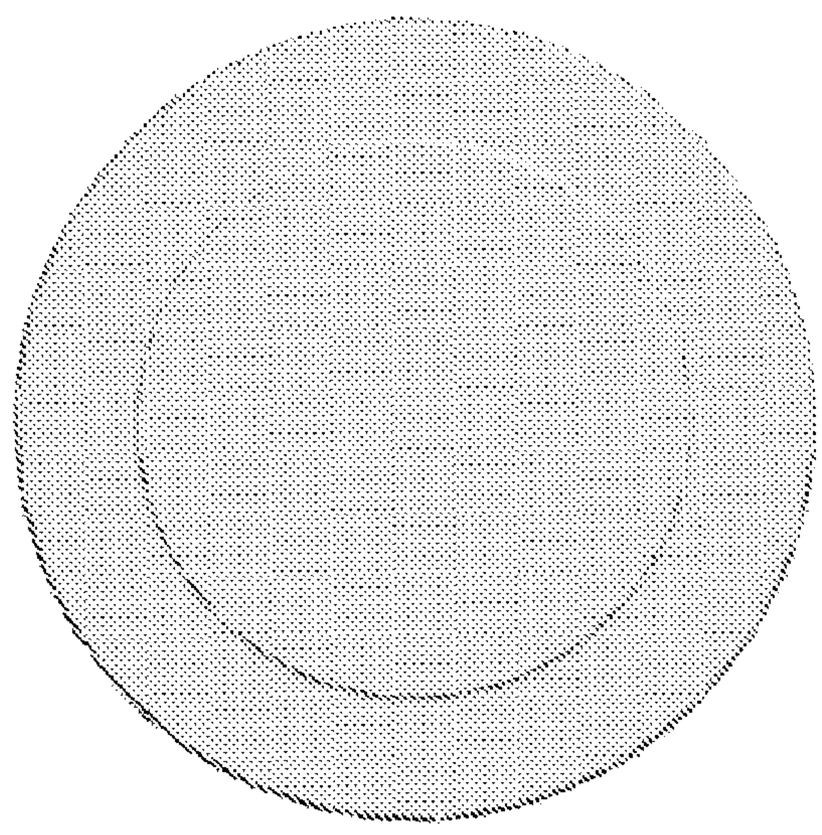

FIG. 8