US00D598564S

(12) United States Design Patent

Coyle et al.

(10) Patent No.: US D598,564 S
(45) Date of Patent: ** Aug. 18, 2009

(54) **HANDLE FOR PORTABLE STERILIZING APPARATUS**

(75) Inventors: **Michael J. Coyle**, Huber Heights, OH (US); **George Chow**, Columbus, OH (US); **Ronald A. Gatchell**, Tipp City, OH (US); **Philip Marc Stewart**, Greenville, OH (US); **Kimberly S. Maalouf**, Tipp City, OH (US)

(73) Assignee: **Midmark Corporation**, Versailles, OH (US)

(**) Term: **14 Years**

(21) Appl. No.: **29/317,451**

(22) Filed: **Apr. 30, 2008**

(51) **LOC (9) Cl.** **24-01**
(52) **U.S. Cl.** **D24/217**
(58) **Field of Classification Search** D24/216–226, D24/227, 229; D8/300, 313, 314; 422/26, 422/291, 292, 295–297, 299; 250/455.11; 16/110.1, 415, 430
See application file for complete search history.

(56) **References Cited**

U.S. PATENT DOCUMENTS

4,145,279	A		3/1979	Selby, III
4,238,447	A		12/1980	Wolff
D259,057	S	*	4/1981	Lancellotti et al. D24/217
4,263,258	A		4/1981	Kalasek
4,304,996	A		12/1981	Blades
4,441,724	A		4/1984	Taylor
4,755,292	A		7/1988	Merriam
4,759,909	A		7/1988	Joslyn
4,808,377	A		2/1989	Childers et al.
4,865,814	A		9/1989	Childress
4,891,910	A		1/1990	Cook et al.
4,892,705	A		1/1990	Sternfeld et al.
4,892,706	A		1/1990	Kralovic et al.
4,900,519	A		2/1990	Nichols
4,909,988	A		3/1990	Childers et al.
4,932,160	A		6/1990	Sperko
5,068,085	A		11/1991	Hastings

(Continued)

OTHER PUBLICATIONS

VWR Lab Shop, VWR Sterilizers, Model AS12 [online], [retrieved Apr. 24, 2009]. Retrieved from the Internet: <URL: http://vwrlabshop.com/vwr-sterilizers-model-as12/p/0013004/.

(Continued)

Primary Examiner—T. Chase Nelson
Assistant Examiner—Anhdao Doan
(74) *Attorney, Agent, or Firm*—Wood, Herron & Evans, LLP

(57) **CLAIM**

The ornamental design for the handle for portable sterilizing apparatus, as shown and described.

DESCRIPTION

FIG. **1** is a perspective view of our new handle for portable sterilizing apparatus design;

FIG. **2** is a front elevation view thereof;

FIG. **3** is a rear elevation view thereof with the tray member removed in order to show the underlying surface of the handle for portable sterilizing apparatus;

FIG. **4** is an enlarged left side elevation view thereof;

FIG. **5** is an enlarged right side elevation view thereof;

FIG. **6** is a top plan view thereof; and,

FIG. **7** is a bottom plan view thereof.

The broken lines in the drawing figures depict unclaimed environmental subject matter in both full and partial states. The broken lines form no part of the claimed design.

1 Claim, 3 Drawing Sheets

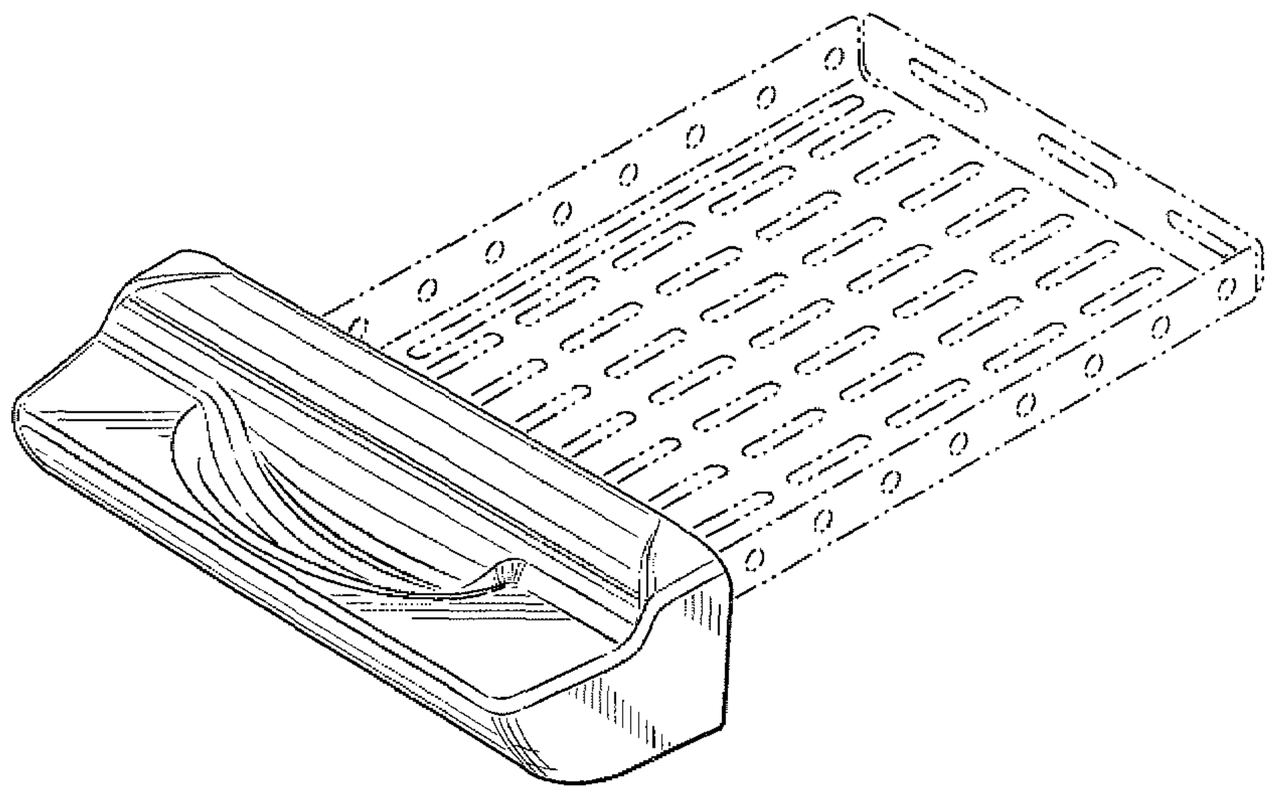

U.S. PATENT DOCUMENTS

5,098,676	A		3/1992	Brooks, Jr.
5,132,084	A		7/1992	Harrell et al.
5,146,713	A		9/1992	Grafius
5,195,790	A		3/1993	Bulko et al.
5,223,229	A		6/1993	Brucker
5,234,124	A		8/1993	Buckner, II et al.
5,249,392	A		10/1993	Houston et al.
5,252,303	A		10/1993	Goof
5,256,382	A		10/1993	Ford et al.
5,258,921	A		11/1993	Ellis
5,261,250	A		11/1993	Missimer
5,266,275	A		11/1993	Faddis
5,271,893	A		12/1993	Newman
5,290,511	A		3/1994	Newman
D351,913	S	*	10/1994	Hieb et al. D24/223
5,366,693	A		11/1994	Burgos et al.
5,390,322	A		2/1995	O'Brien et al.
5,407,648	A		4/1995	Allen et al.
5,424,047	A		6/1995	Zwingenberger et al.
5,424,048	A		6/1995	Riley
D369,087	S	*	4/1996	Decursu et al. D8/314
5,535,141	A		7/1996	Lussi
5,540,901	A		7/1996	Riley
5,566,508	A		10/1996	Houston
5,571,476	A		11/1996	Newman
5,713,941	A		2/1998	Robins et al.
5,730,944	A		3/1998	Peake
D395,708	S	*	6/1998	Shartle et al. D24/224
5,761,069	A		6/1998	Weber et al.
D403,570	S	*	1/1999	Relyea et al. D8/300
5,858,304	A		1/1999	Breach
5,868,999	A		2/1999	Karlson
5,880,438	A		3/1999	Parrini et al.
5,882,612	A		3/1999	Riley
5,993,754	A		11/1999	Lemmen et al.
6,007,780	A		12/1999	Heredia
6,017,105	A		1/2000	Goughnour et al.
6,048,502	A		4/2000	Easter
6,048,503	A		4/2000	Riley et al.
6,058,247	A		5/2000	Lahey et al.
D429,140	S	*	8/2000	Schacht et al. D8/314
6,217,835	B1		4/2001	Riley et al.
6,251,345	B1		6/2001	Palmers
6,319,479	B1		11/2001	Houston
6,391,258	B1		5/2002	Peake et al.
6,416,144	B1		7/2002	Houston et al.
6,589,477	B1		7/2003	Frieze et al.
6,713,029	B1		3/2004	Krafft et al.
6,793,900	B1		9/2004	Morck et al.
D500,659	S	*	1/2005	Reed et al. D8/313
6,874,634	B2		4/2005	Riley
6,984,359	B2		1/2006	Florkey et al.
6,992,494	B2		1/2006	Kaiser et al.
D565,743	S	*	4/2008	Phillips et al. D24/229
2002/0085945	A1		7/2002	Florkey et al.
2002/0098139	A1		7/2002	Sparks
2003/0118491	A1		6/2003	Frieze et al.
2003/0200876	A1		10/2003	Brokaw et al.
2004/0042943	A1		3/2004	Wanselin
2004/0091389	A1		5/2004	Malkin et al.
2004/0256269	A1		12/2004	Gleichauf et al.
2005/0001634	A1		1/2005	Kaiser et al.
2005/0050644	A1		3/2005	Severns et al.
2005/0063883	A1		3/2005	Sullivan
2005/0191207	A1		9/2005	Terwilliger et al.
2005/0263421	A1		12/2005	Kohler
2005/0263422	A1		12/2005	Kohler

OTHER PUBLICATIONS

Paragon Medical, Pelton Crane Delta XL Autoclave [online], p. 2, [retrieved Apr. 24, 2009]. Retrieved from the Internet: <URL: http://www.paragonmed.com/autoclave.shtml.

Dre, Statim Sterilizer [online], [retrieved May 21, 2009]. Retrieved from the Internet: <URL: http://www.dremed.com/catalog/documents/sci-can.

Scican, Statim Sterilizer [online], [retrieved May 21, 2009]. Retrieved from the Internet: <URL: http://www.piercing.org/statim/index.htm.

Alfa Medical, Scican Statim 2000 Parts, main view [online], [retrieved May 21, 2009]. Retrieved from the Internet: <URL: http://www.autoclave-parts.com/Z-Scican/Statim-2000/Statim-2000.html.

Alfa Medical, Scican Statim 2000 Sterilizer Parts, right view [online], [retrieved May 21, 2009]. Retrieved from the Internet: <URL: http://www.autoclave-parts.com/Z-Scican/Statim-2000/Statim-2000-right.html.

* cited by examiner

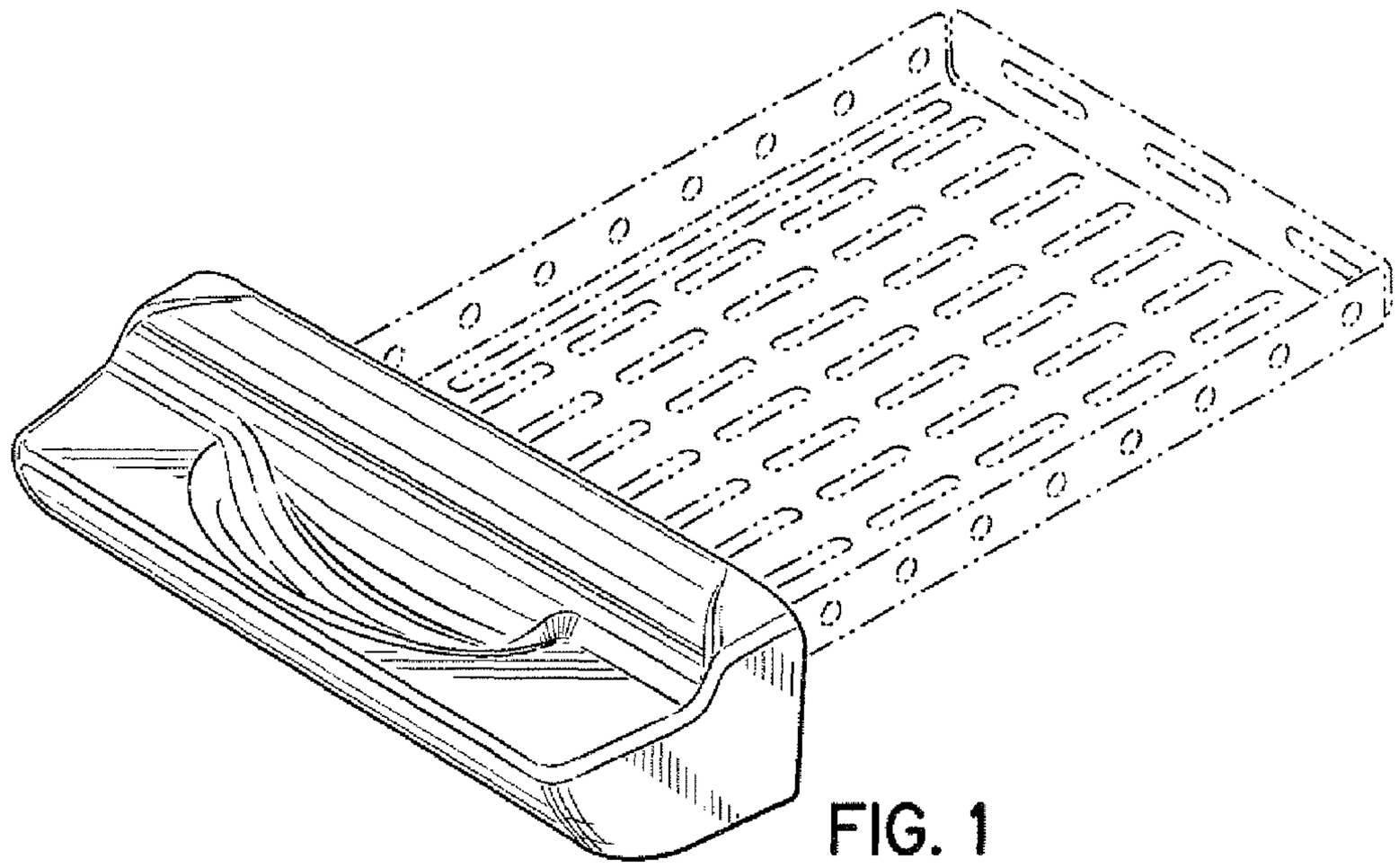

FIG. 1

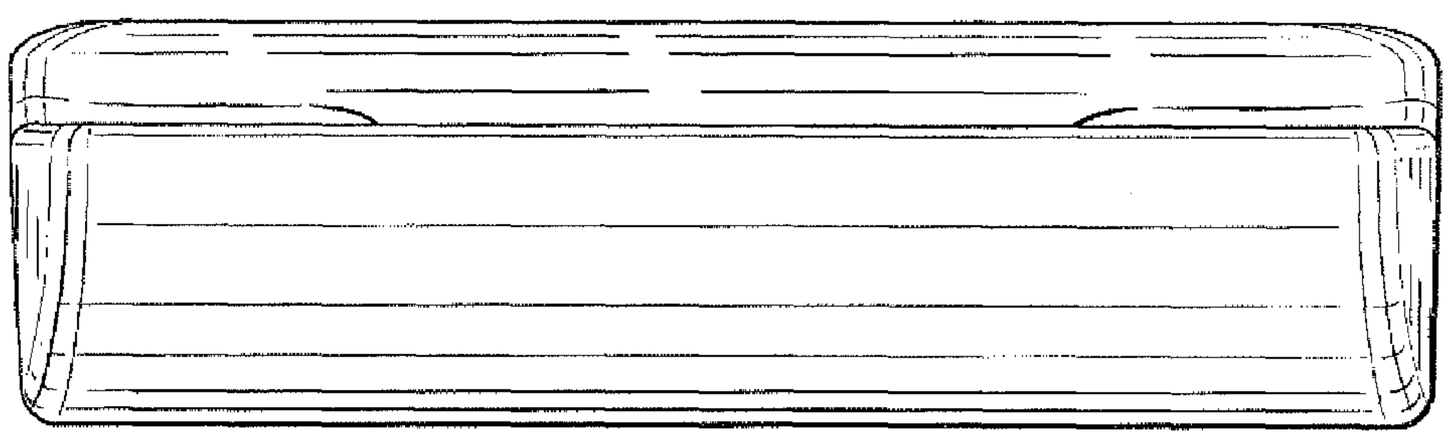

FIG. 2

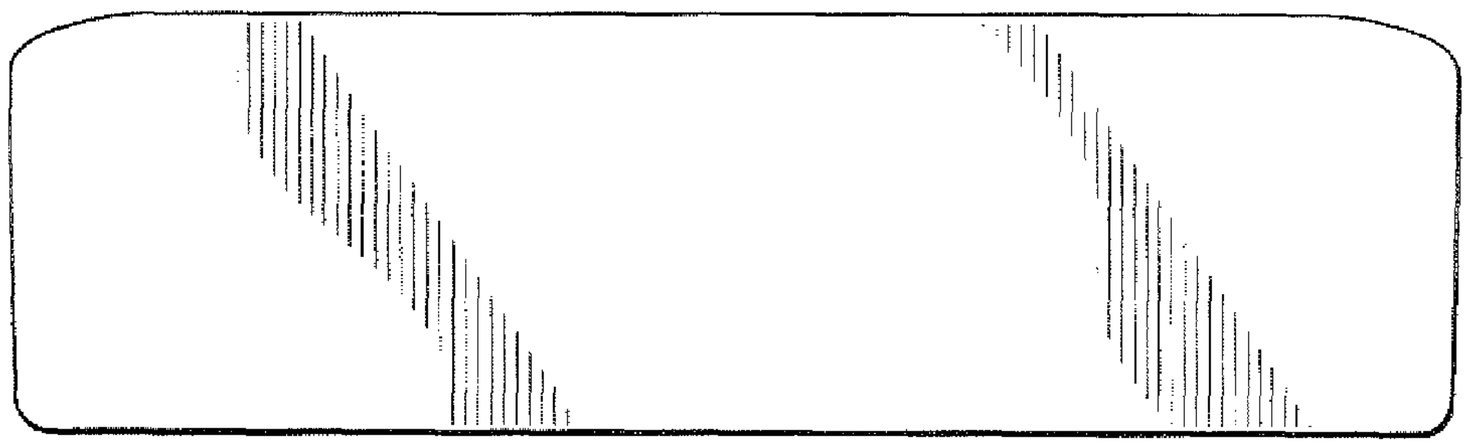

FIG. 3

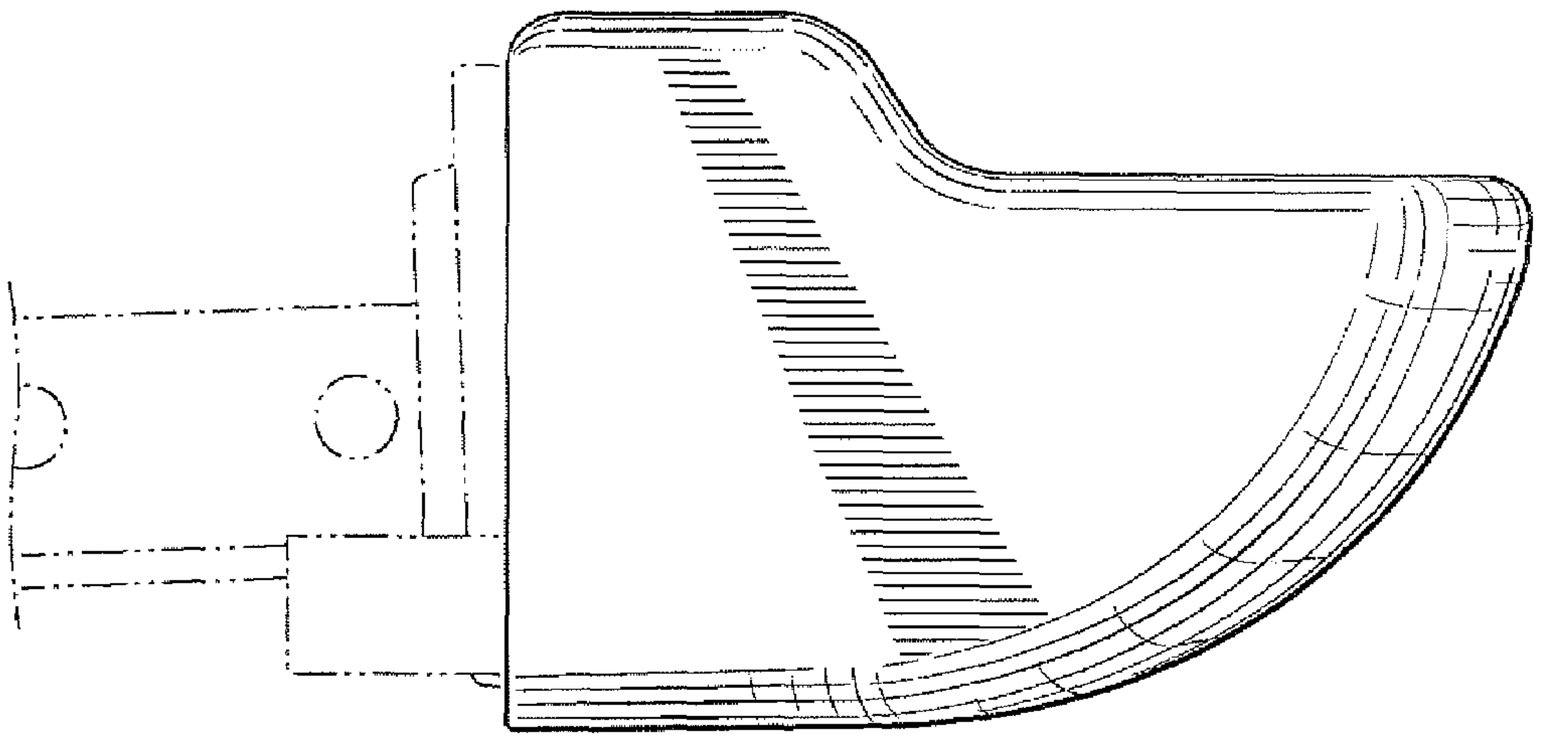

FIG. 4

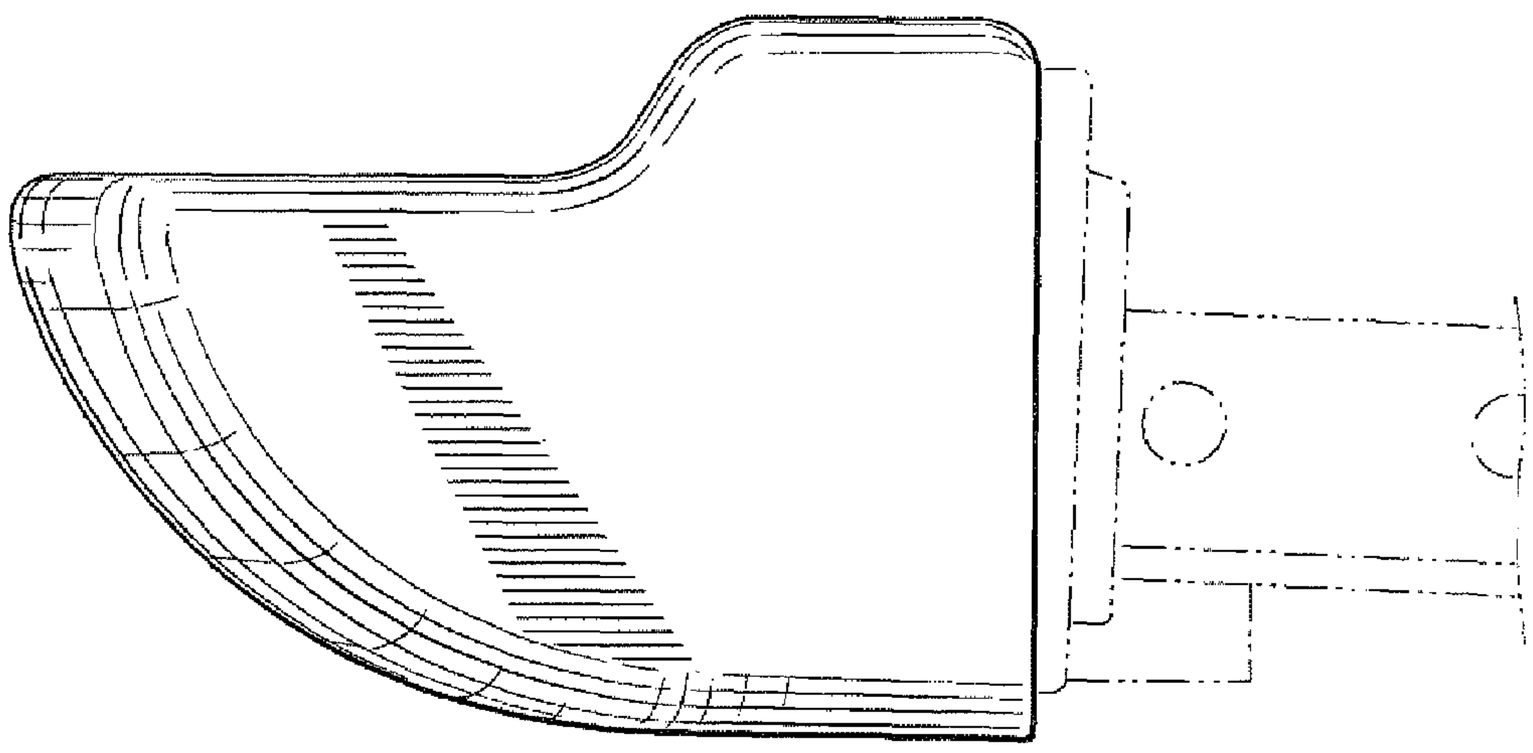

FIG. 5

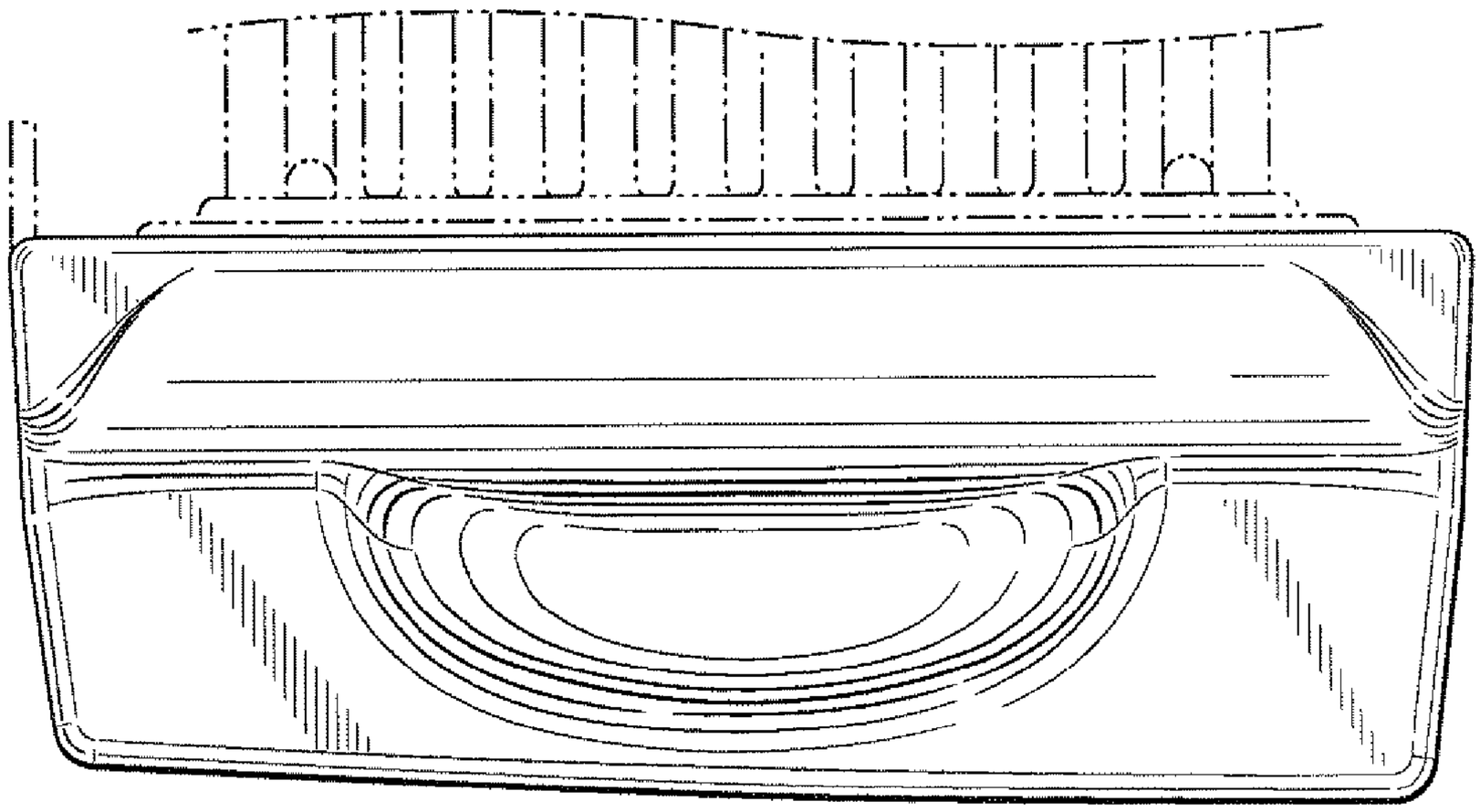

FIG. 6

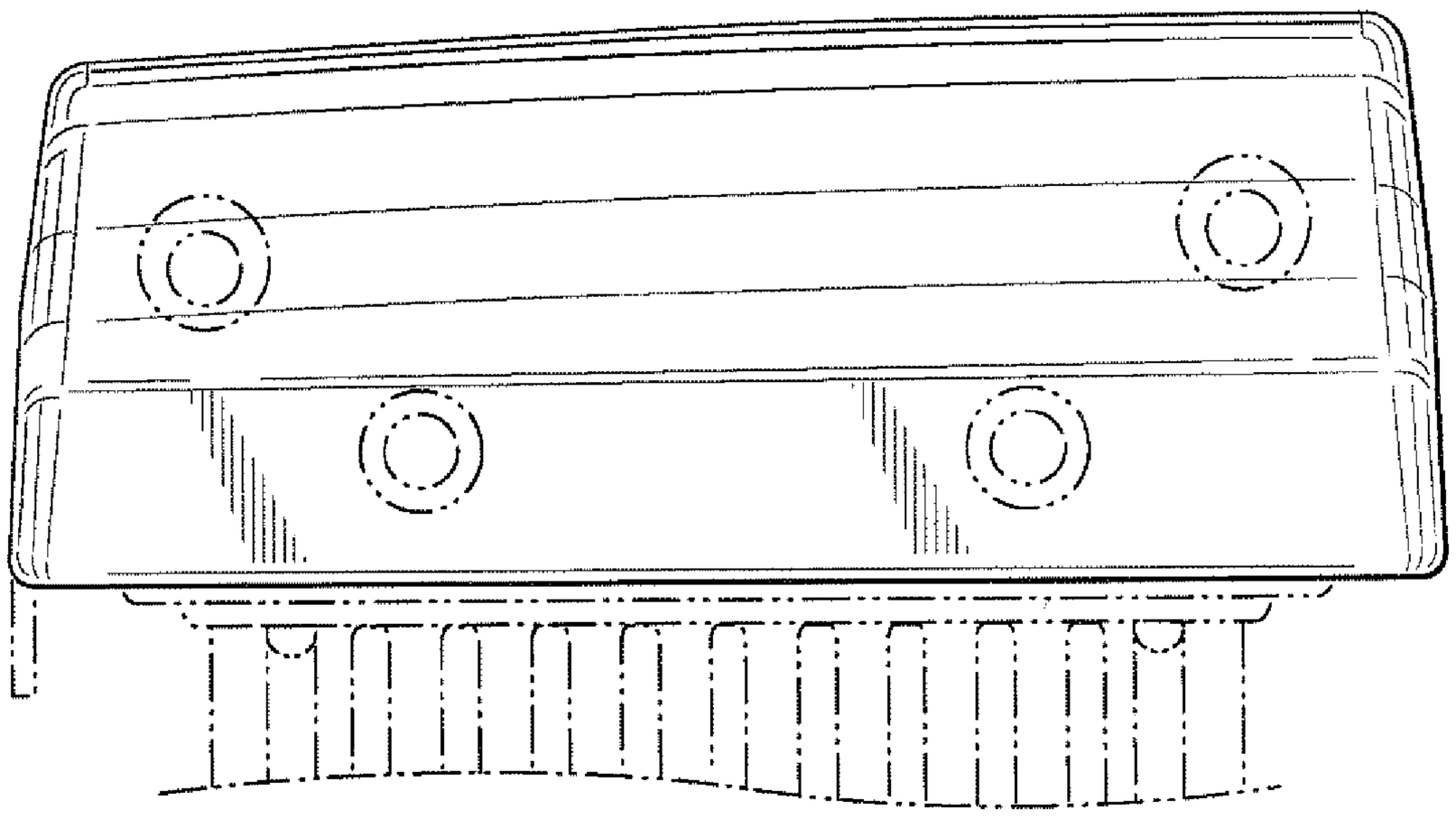

FIG. 7