US00D597534S

(12) United States Design Patent
Christopher

(10) Patent No.: US D597,534 S
(45) Date of Patent: ** Aug. 4, 2009

(54) **HEADSET FOR A COMMUNICATIONS DEVICE**

(75) Inventor: **Stephen M. Christopher**, Chicago, IL (US)

(73) Assignee: **Motorola, Inc.**, Schaumburg, IL (US)

(**) Term: **14 Years**

(21) Appl. No.: **29/305,316**

(22) Filed: **Mar. 18, 2008**

(51) **LOC (9) Cl.** **14-01**
(52) **U.S. Cl.** **D14/223**
(58) **Field of Classification Search** D14/205, D14/206, 223; 181/129, 130; 379/430, 431; 381/380, 381; 455/575.2
See application file for complete search history.

(56) **References Cited**

U.S. PATENT DOCUMENTS

D471,898	S	*	3/2003	Bae	D14/223
D480,386	S	*	10/2003	Browne et al.	D14/223
D502,171	S	*	2/2005	Tang et al.	D14/223
6,868,284	B2	*	3/2005	Bae	455/575.2
D508,485	S	*	8/2005	Katsumata	D14/223
D510,337	S	*	10/2005	Tages	D14/205
D512,049	S	*	11/2005	Yang	D14/223
D520,497	S	*	5/2006	Yang	D14/223
D533,540	S	*	12/2006	Murray	D14/205
D538,271	S	*	3/2007	Kim et al.	D14/223
D538,792	S	*	3/2007	Kim et al.	D14/223
D542,267	S	*	5/2007	Cha et al.	D14/206
D552,087	S	*	10/2007	Wei	D14/223
D552,596	S	*	10/2007	Christopher	D14/205
7,289,640	B2	*	10/2007	Tsai et al.	381/380
D554,626	S	*	11/2007	Christopher	D14/223
D555,150	S	*	11/2007	Christopher et al.	D14/223
D555,151	S	*	11/2007	Eklund	D14/223
D559,836	S	*	1/2008	Lee	D14/223
D562,310	S	*	2/2008	Moon et al.	D14/223
D562,808	S	*	2/2008	Gwee	D14/223
D564,500	S	*	3/2008	Wang	D14/223
D566,105	S	*	4/2008	Yang et al.	D14/223
D566,108	S	*	4/2008	Kan	D14/223
D566,692	S	*	4/2008	Sade et al.	D14/223
D568,301	S	*	5/2008	Kim et al.	D14/223
D573,582	S	*	7/2008	Ma	D14/205
D575,277	S	*	8/2008	Gaarde et al.	D14/223
D578,516	S	*	10/2008	Christopher	D14/223

* cited by examiner

Primary Examiner—Paula Greene

(57) **CLAIM**

The ornamental design of a headset for a communications device, as shown and described.

DESCRIPTION

FIG. **1** is a perspective view of an ornamental design of a headset for a communications device;

FIG. **2** is a top view thereof;

FIG. **3** is a bottom view thereof;

FIG. **4** is a first side view thereof;

FIG. **5** is a second side view thereof;

FIG. **6** is a front view thereof; and,

FIG. **7** is a rear view thereof.

The broken lines shown in FIGS. **1**–**7** that are immediately adjacent to the shaded areas represent the bound of the claimed design, while all other broken lines are directed to environment and are for illustrative purposes only; the broken lines form no part of the claim design.

1 Claim, 4 Drawing Sheets

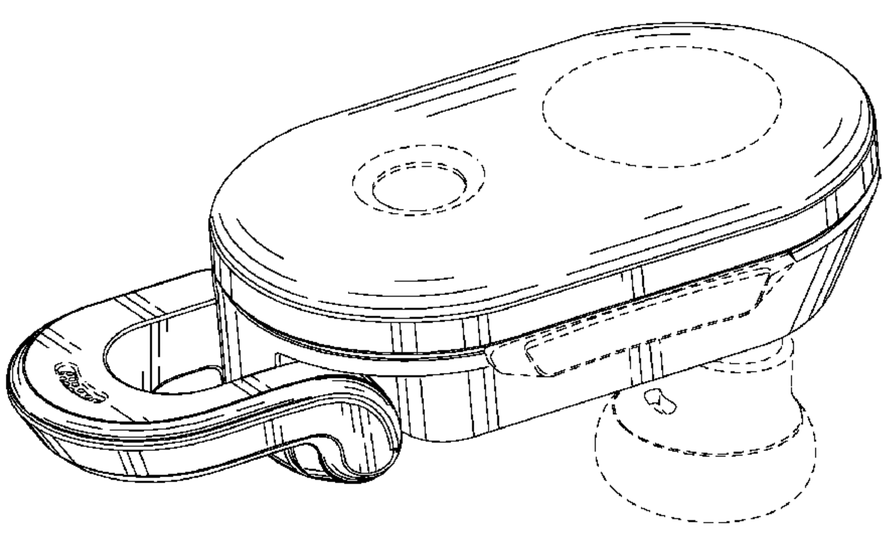

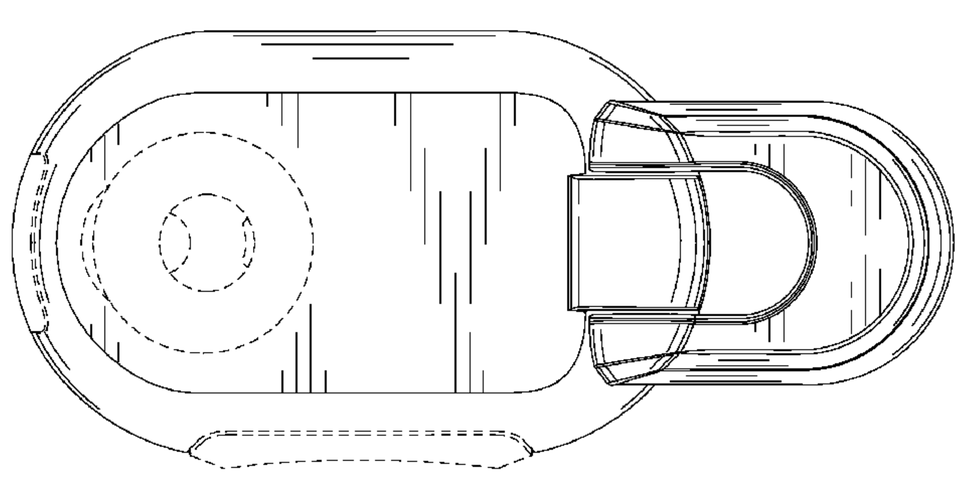

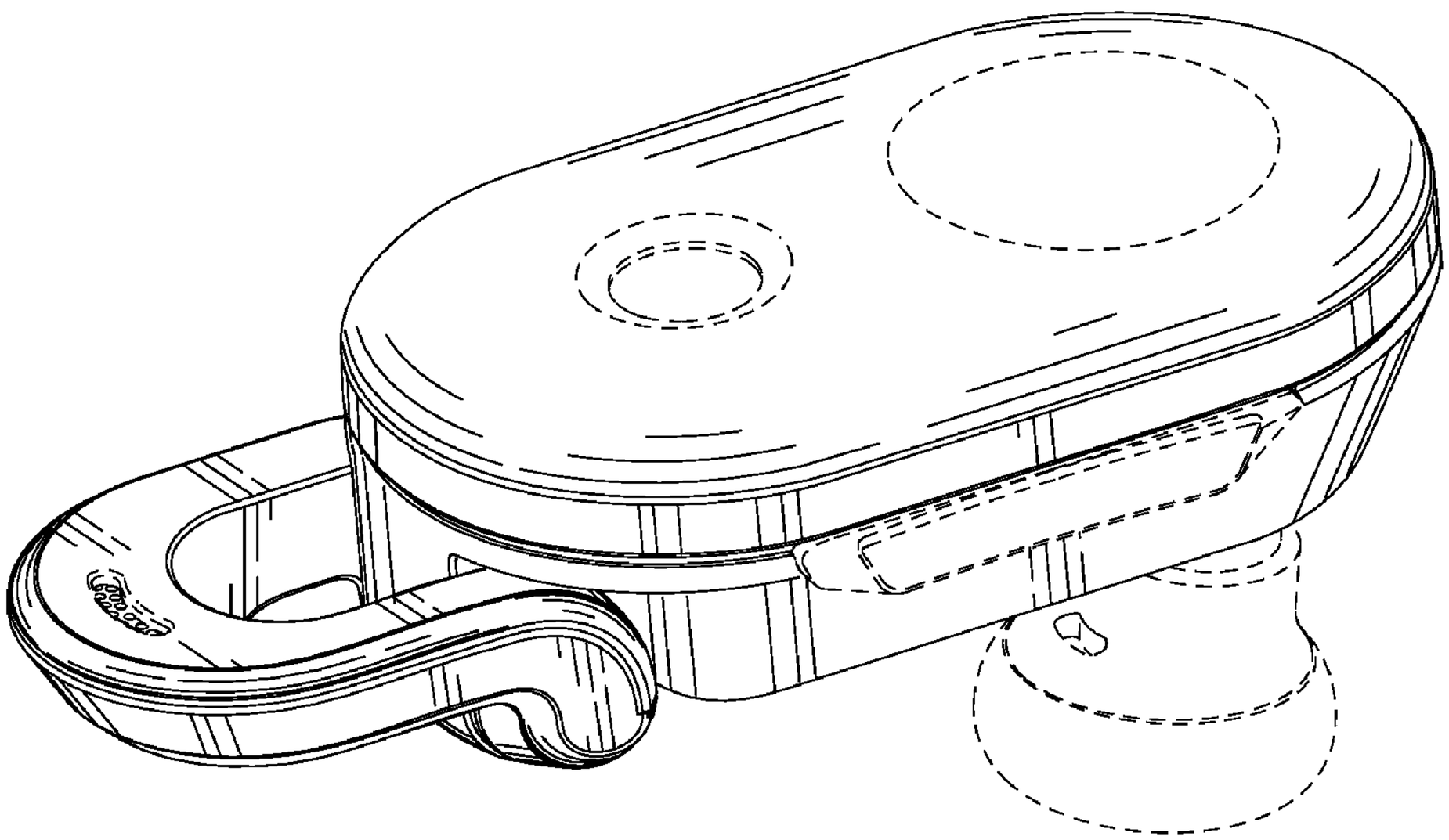

FIG. 1

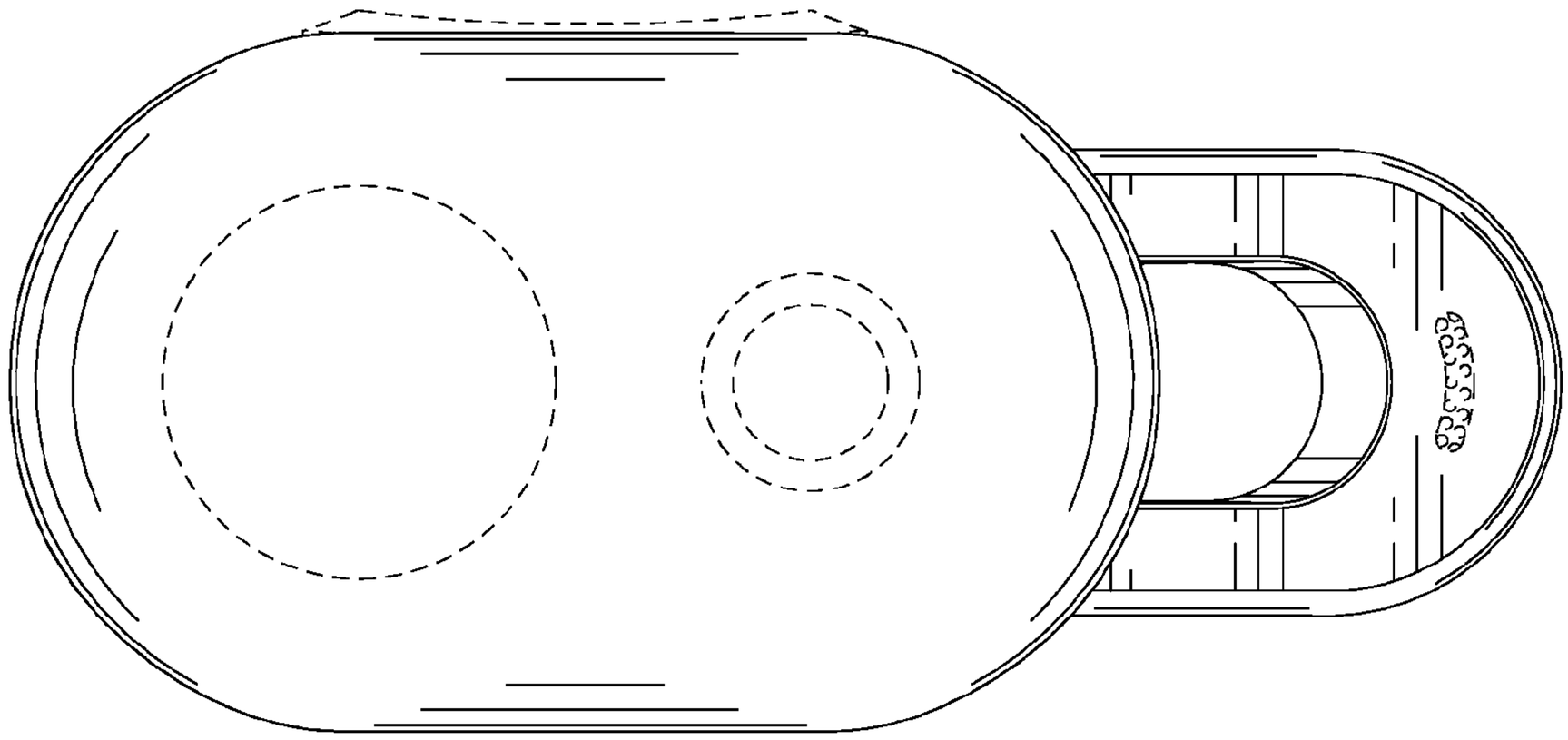

FIG. 2

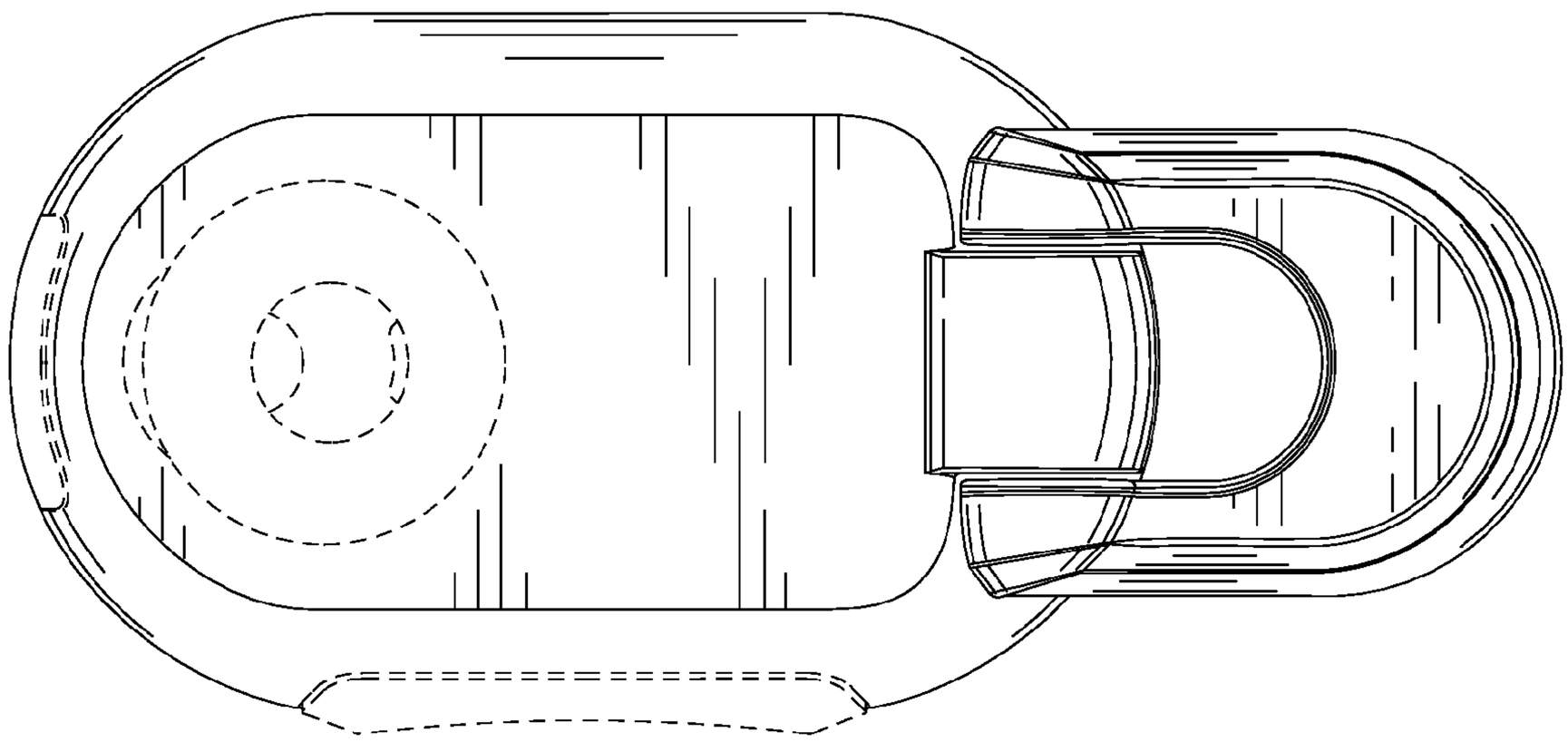

FIG. 3

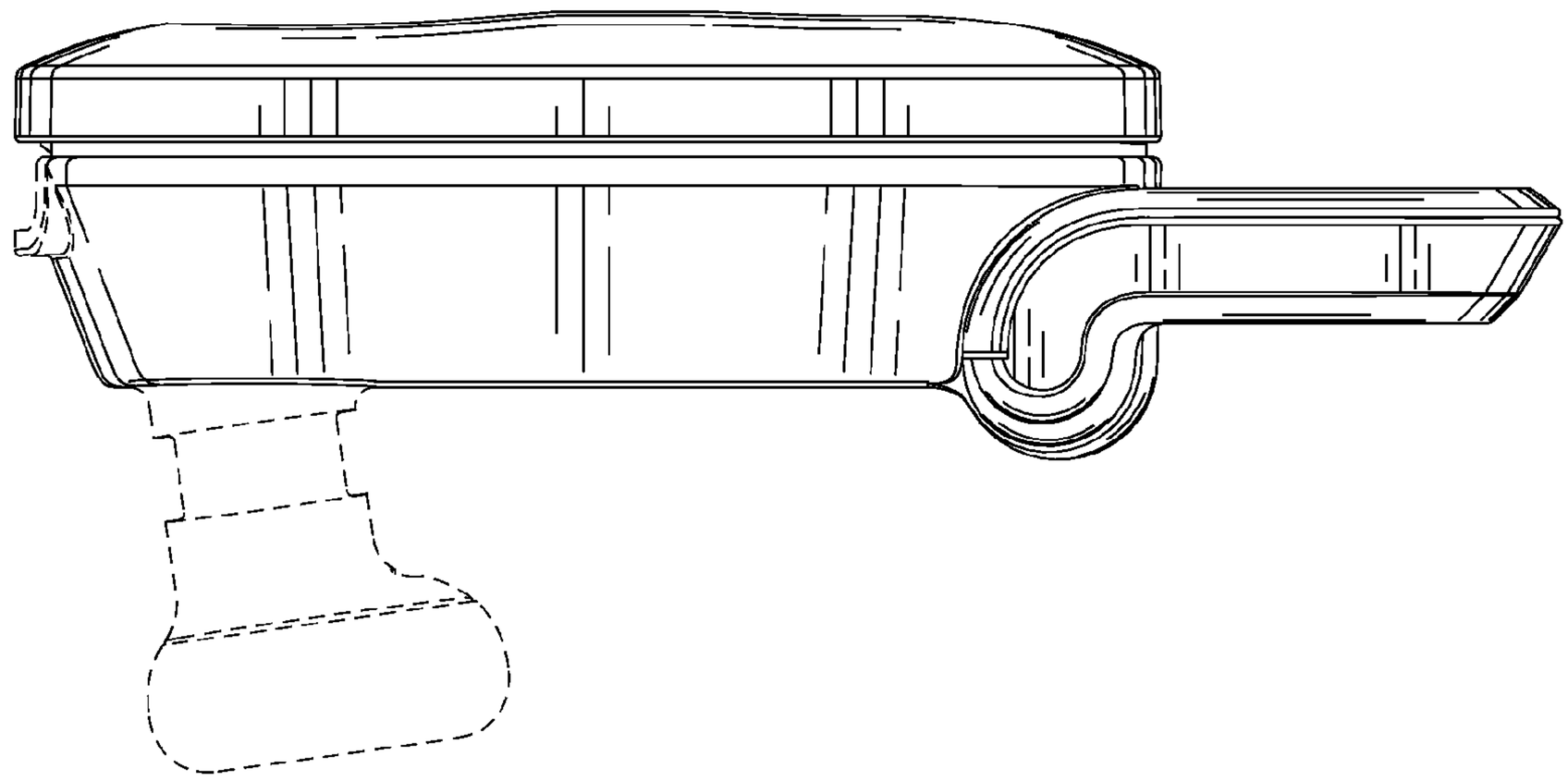

FIG. 4

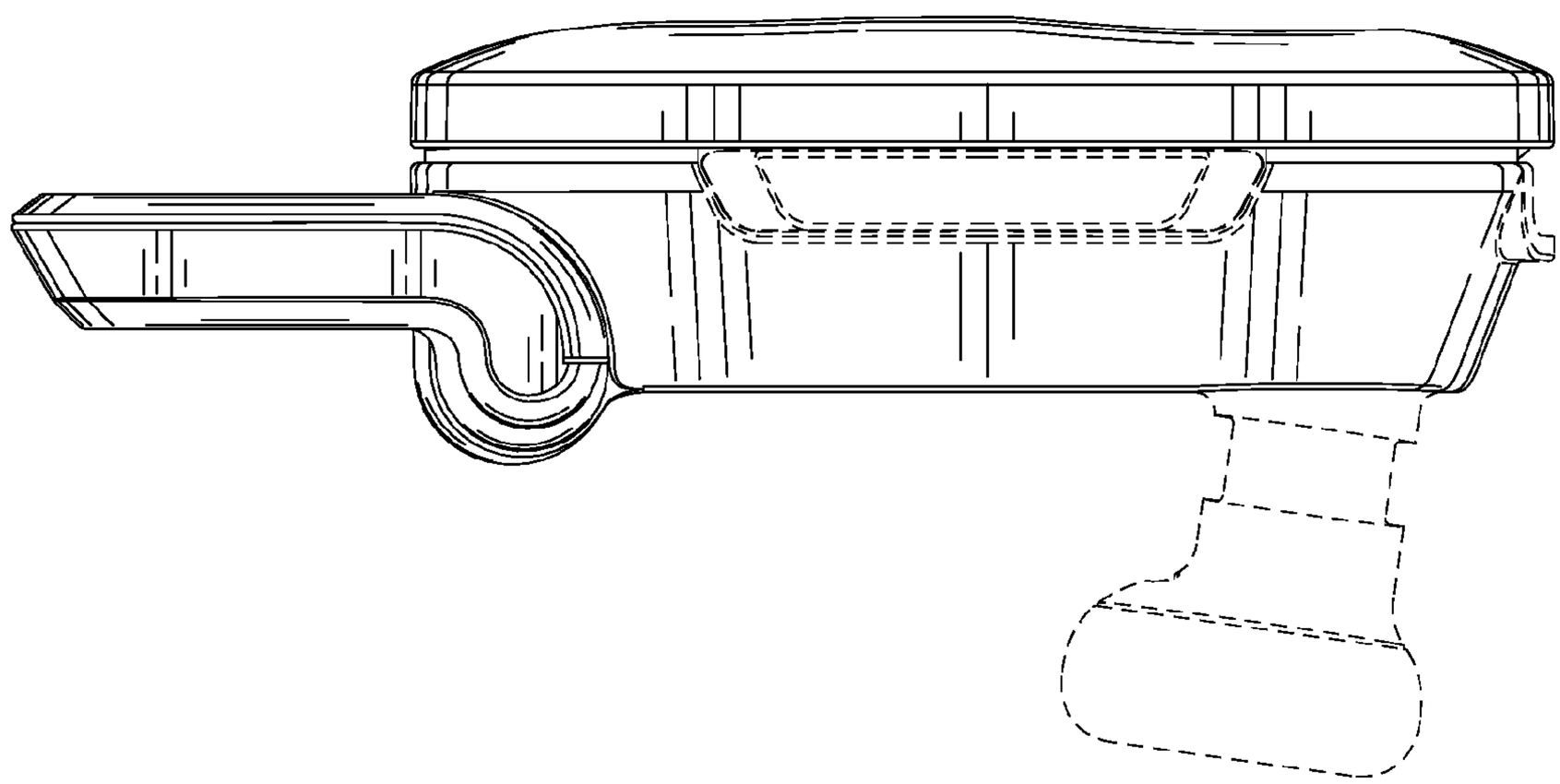

FIG. 5

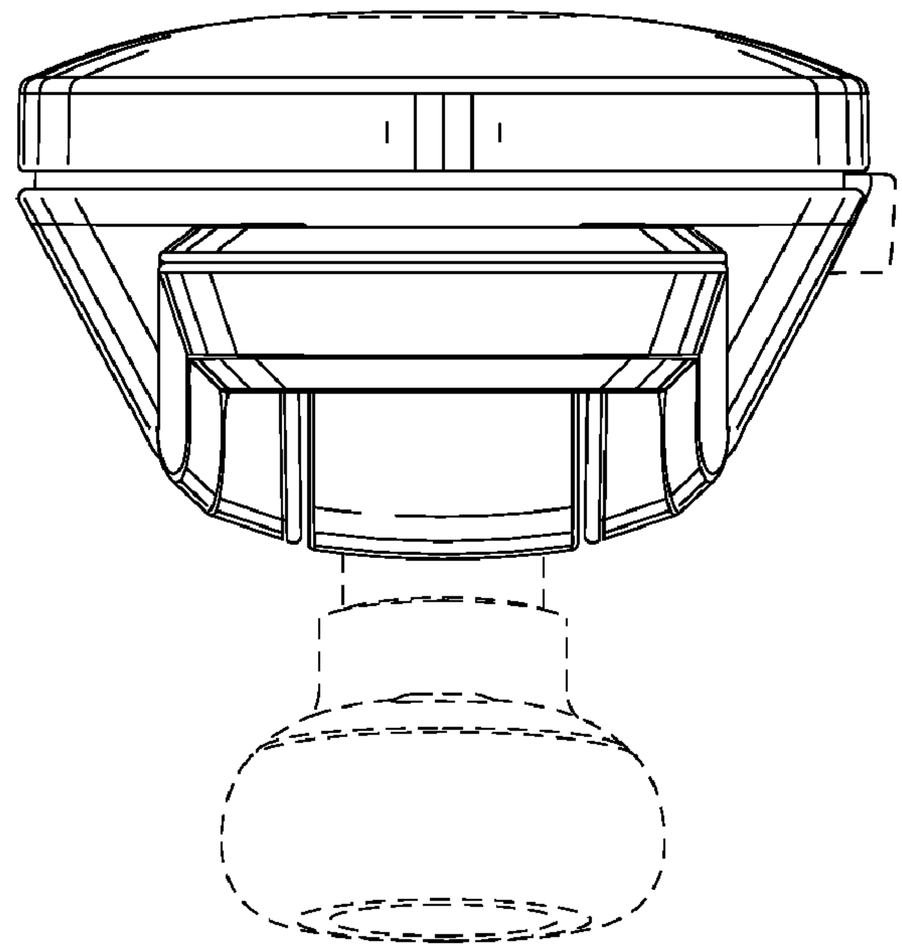

FIG. 6

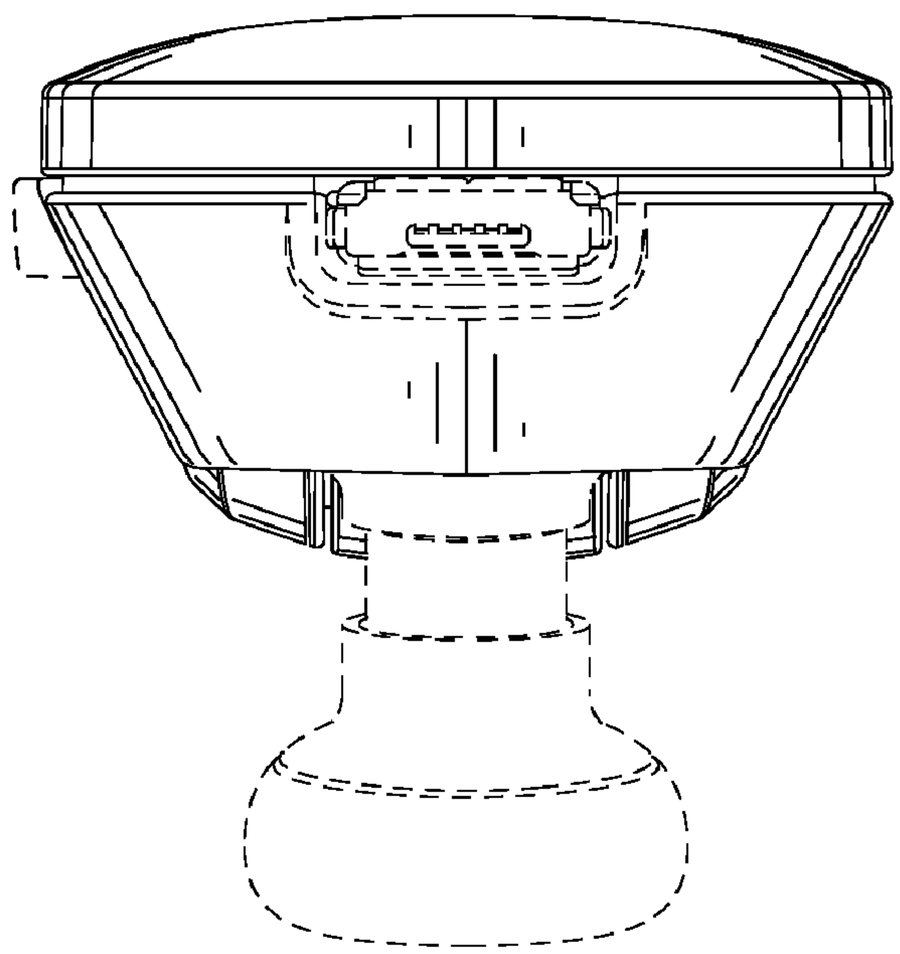

FIG. 7