US00D596021S

(12) United States Design Patent

Smeja et al.

(10) Patent No.: US D596,021 S
(45) Date of Patent: ** Jul. 14, 2009

(54) **SNOW GUARD CLAMP**

(75) Inventors: **Michael V. Smeja**, McHenry, IL (US); **Troy Livingston**, Northbrook, IL (US)

(73) Assignee: **Sno-Gem, Inc.**, McHenry, IL (US)

(**) Term: **14 Years**

(21) Appl. No.: **29/280,104**

(22) Filed: **May 16, 2007**

(51) **LOC (9) Cl.** **08-99**
(52) **U.S. Cl.** **D8/499**
(58) **Field of Classification Search** D8/499; 52/545, 533, 24–26
See application file for complete search history.

(56) **References Cited**

U.S. PATENT DOCUMENTS

884,850	A	4/1908	Peter	
933,784	A	9/1909	Peter	
D260,590	S *	9/1981	Hobson	D8/403
5,222,340	A	6/1993	Bellem	
5,282,340	A	2/1994	Cline et al.	
5,522,185	A	6/1996	Cline et al.	
5,613,328	A	3/1997	Alley	
D385,180	S *	10/1997	Brandes	D8/403
D385,485	S *	10/1997	Brandes	D8/403
D388,317	S *	12/1997	Brandes	D8/403
D394,603	S *	5/1998	Brandes	D8/403
D394,802	S *	6/1998	Brandes	D8/403
6,223,477	B1	5/2001	Alley	
6,385,914	B2 *	5/2002	Alley	52/25
6,453,623	B1	9/2002	Nelson et al.	
6,536,166	B1	3/2003	Alley	
6,647,671	B1	11/2003	Alley	
7,127,852	B1	10/2006	Dressler	
D537,337	S *	2/2007	Brockington et al.	D8/499
2004/0200186	A1	10/2004	Haddock	
2005/0102958	A1	5/2005	Anderson	
2005/0217203	A1	10/2005	Haddock	
2005/0257434	A1	11/2005	Hockman	

FOREIGN PATENT DOCUMENTS

WO	WO 99/55982	11/1999

* cited by examiner

Primary Examiner—Cathron C Brooks
Assistant Examiner—Barbara Fox
(74) *Attorney, Agent, or Firm*—Robert E. Browne; Neal, Gerber & Eisenberg LLP

(57) **CLAIM**

The ornamental design for a snow guard clamp, as shown.

DESCRIPTION

FIG. **1** is a perspective view of the snow guard clamp embodying the inventive aspects of the present invention;

FIG. **2** is a front elevational view of the snow guard clamp shown in FIG. **1**;

FIG. **3** is a back elevational view of the snow guard clamp shown in FIG. **1**;

FIG. **4** is a side elevational view of the snow guard clamp shown in FIG. **1**;

FIG. **5** is the other side elevational view of the snow guard clamp shown in FIG. **1**;

FIG. **6** is a top elevational view of the snow guard clamp shown in FIG. **1**; and,

FIG. **7** is a bottom elevational view of the snow guard clamp shown in FIG. **1**.

The broken lines shown in the drawings are for the purpose of illustrating portions of the snow guard clamp and form no part of the claimed design.

1 Claim, 4 Drawing Sheets

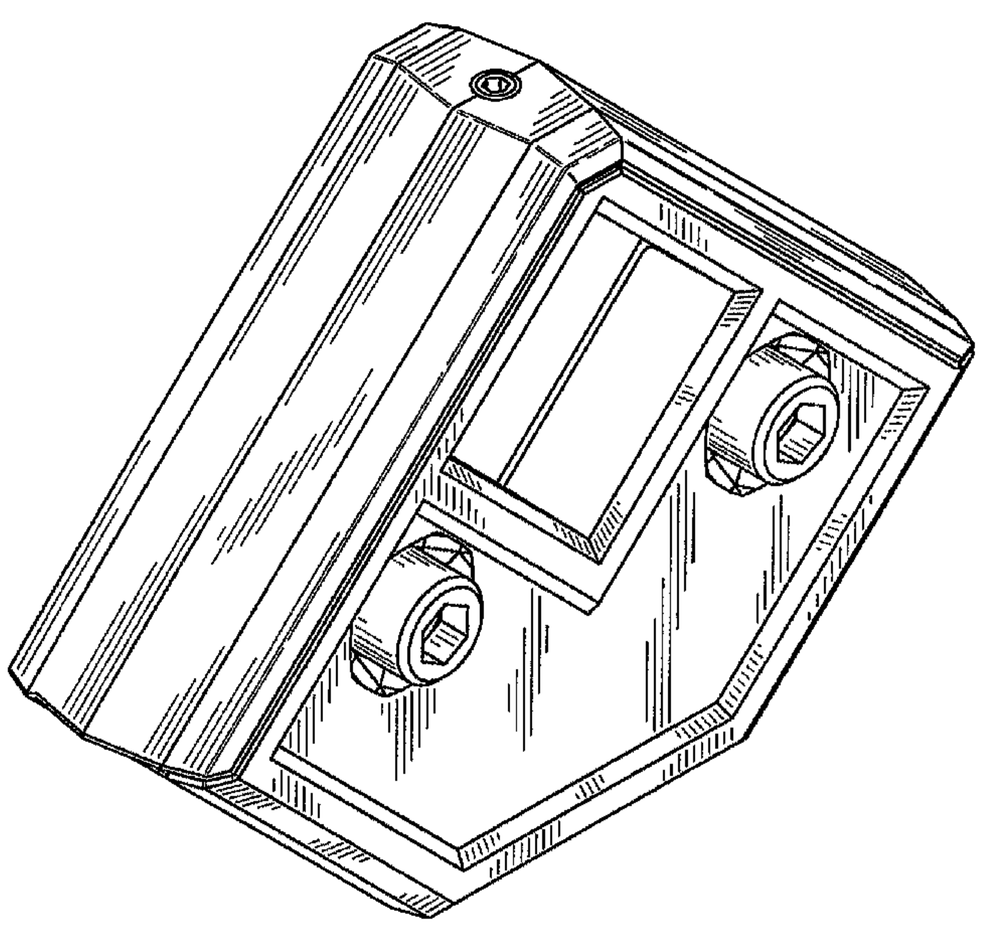

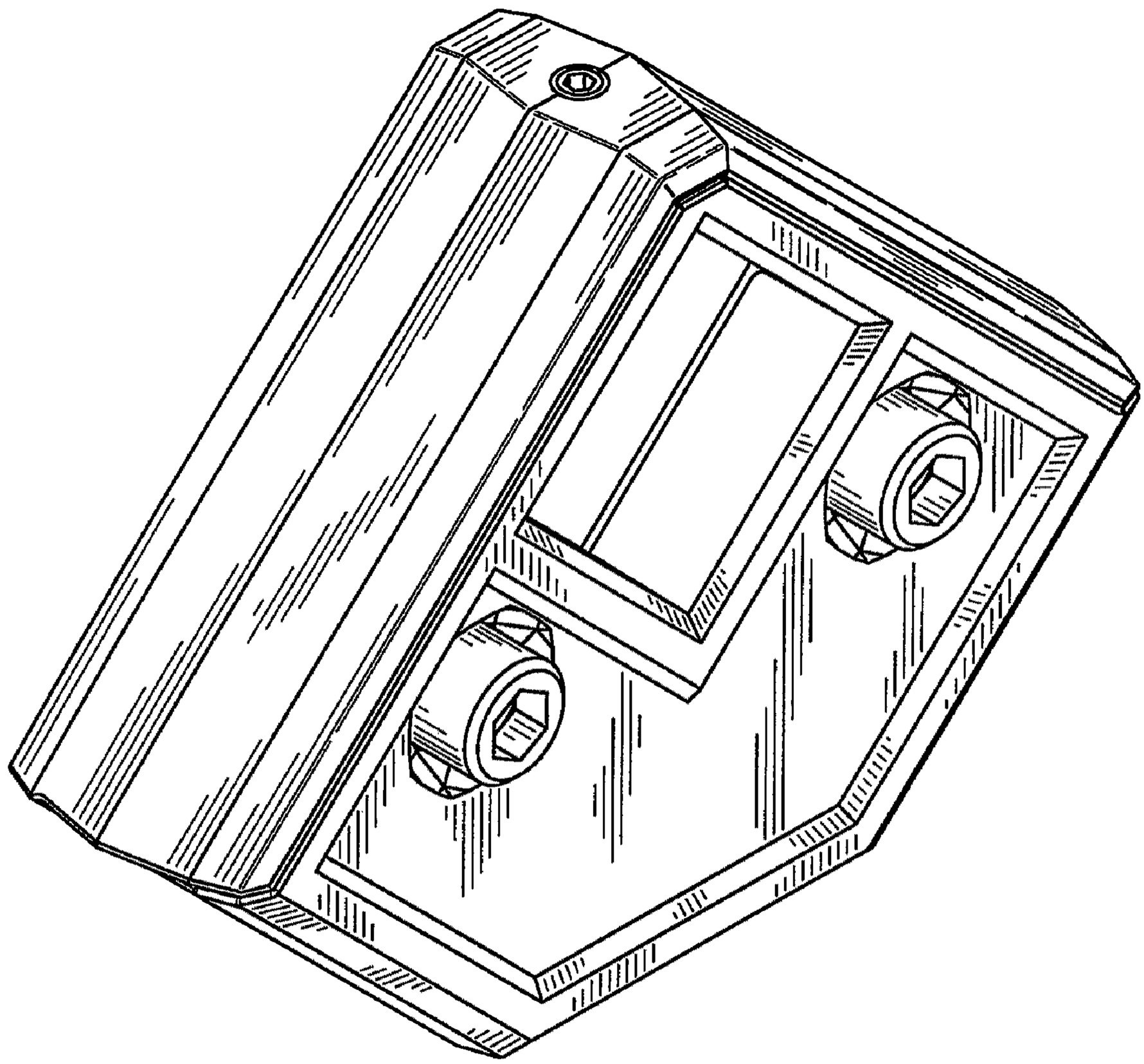

FIG. 1

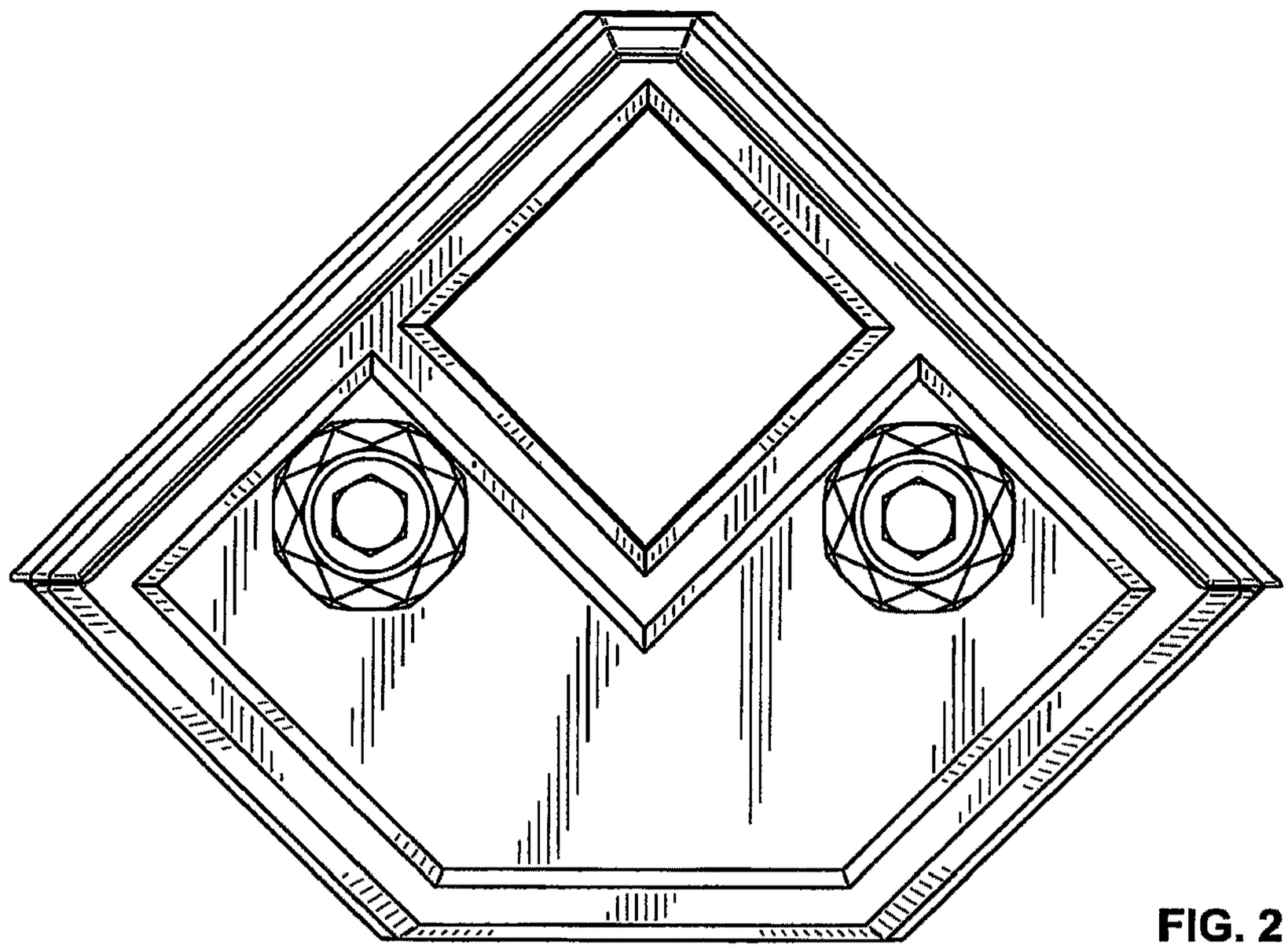

FIG. 2

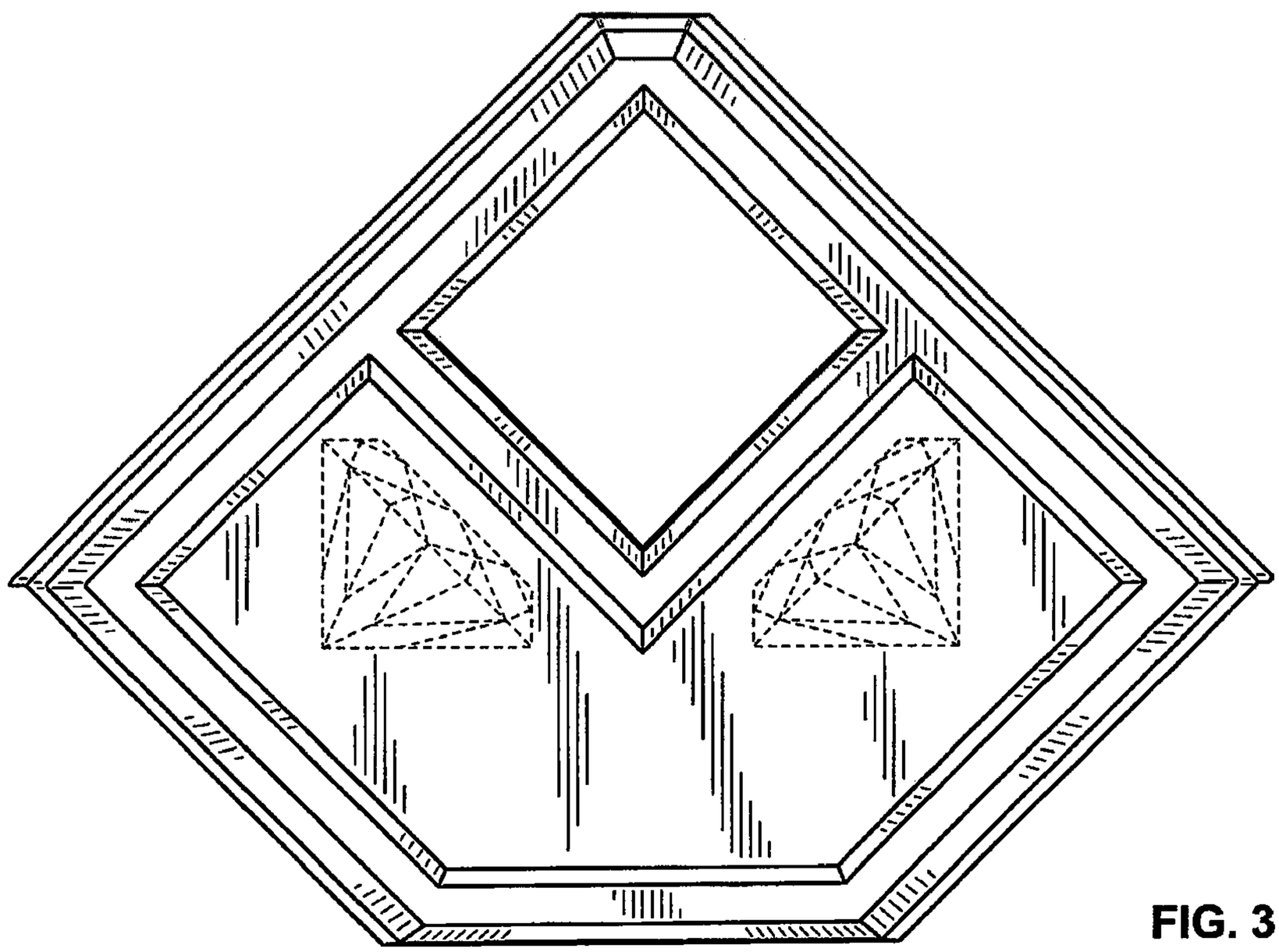

FIG. 3

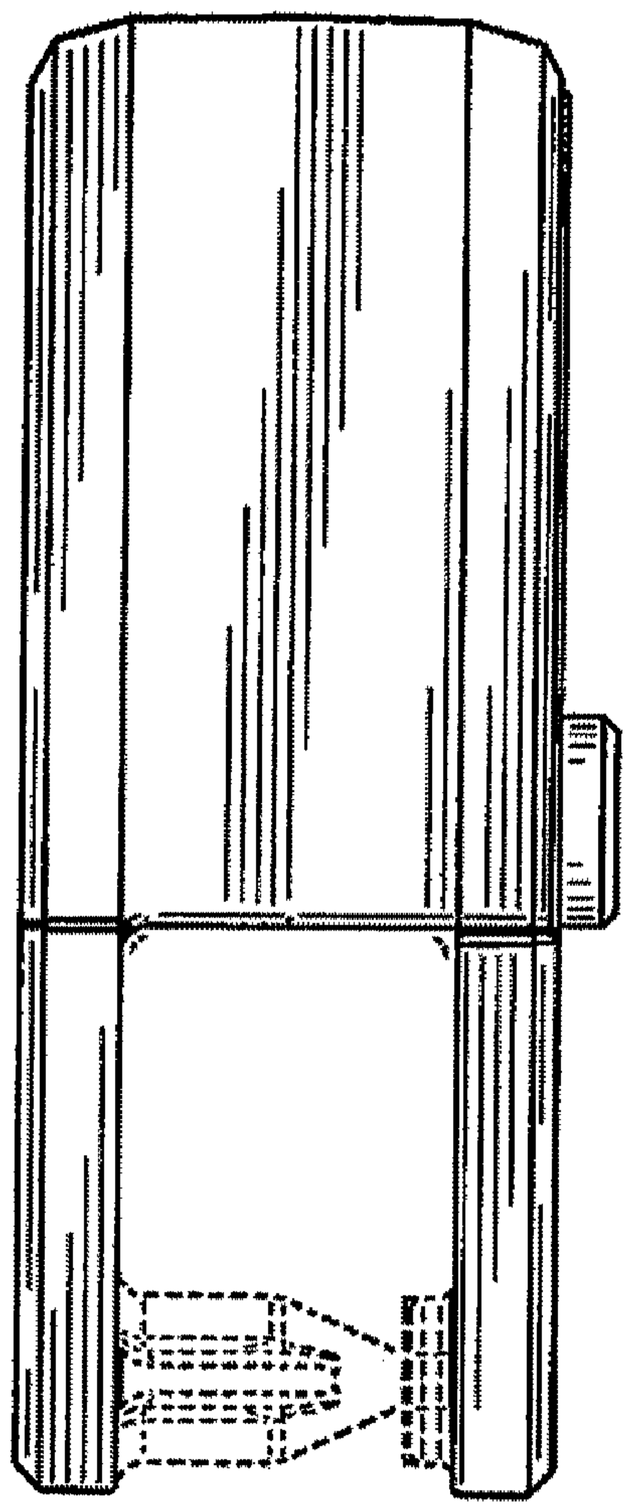

FIG. 4

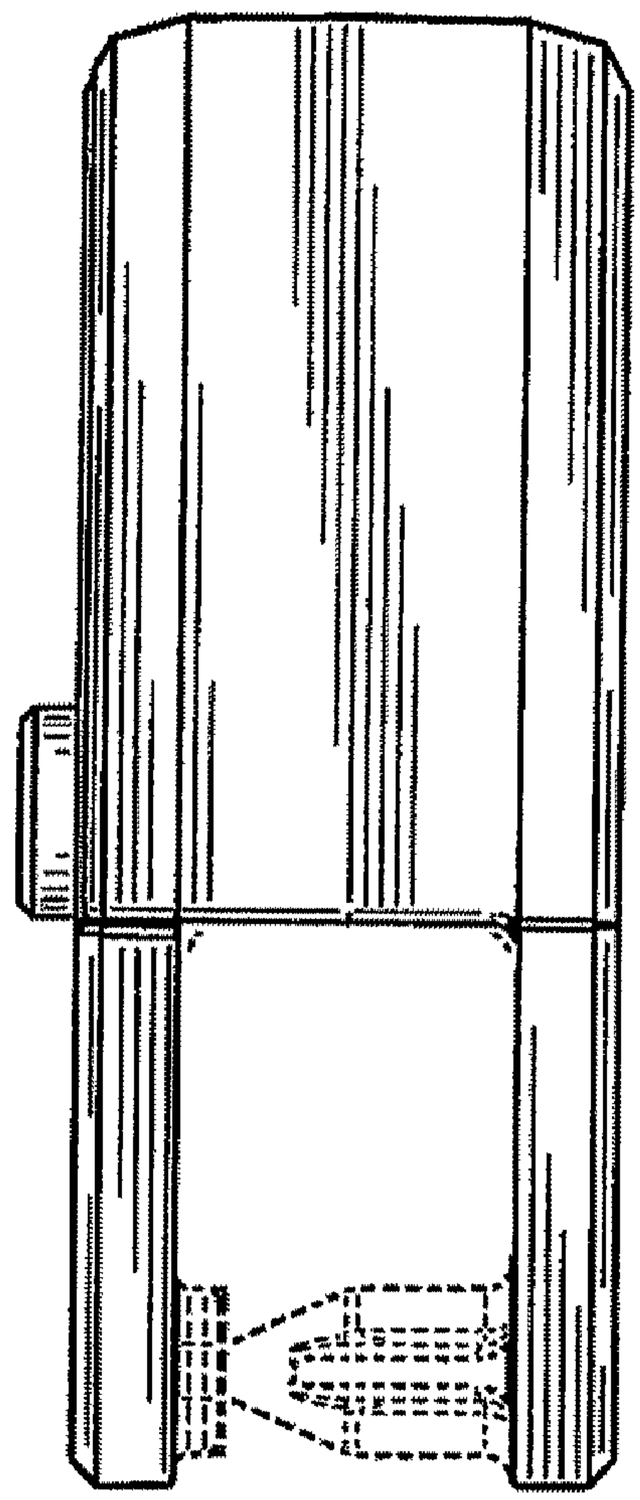

FIG. 5

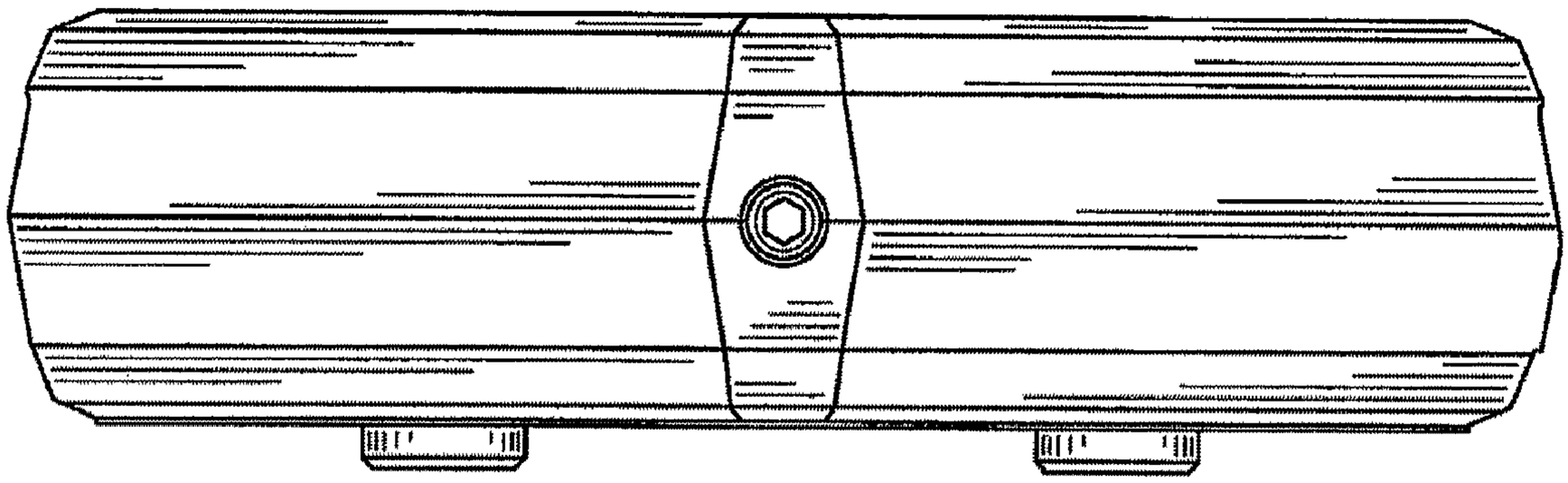

FIG. 6

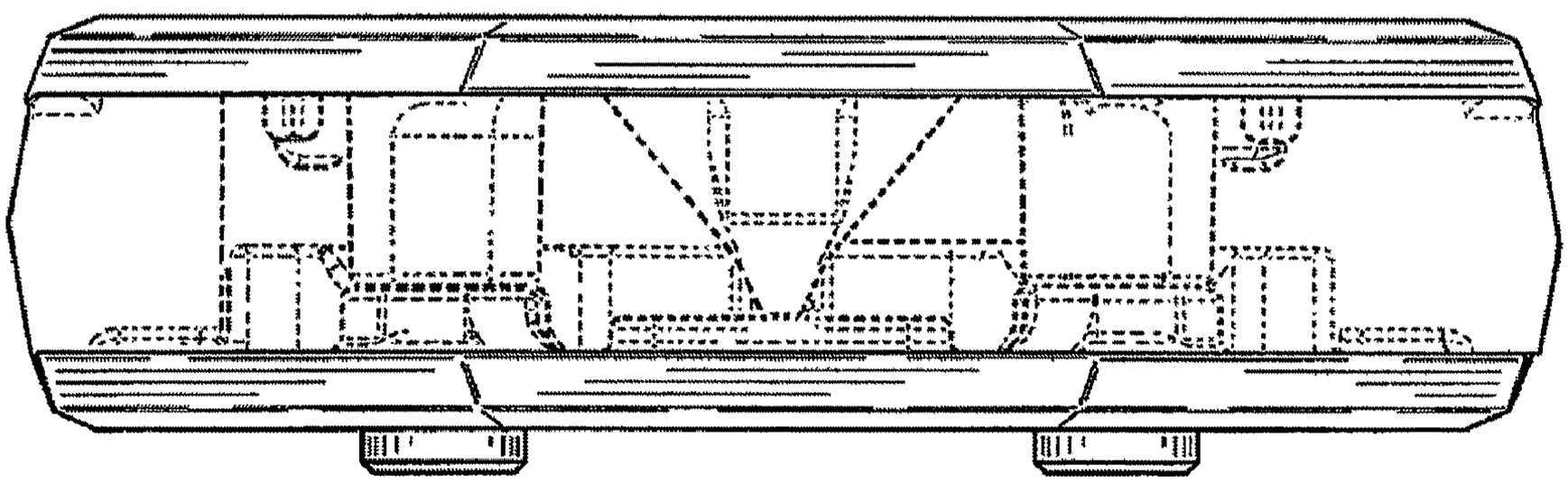

FIG. 7