US00D595642S

(12) United States Design Patent

Fontaine et al.

(10) Patent No.: US D595,642 S
(45) Date of Patent: ** Jul. 7, 2009

(54) **TIRE**

(75) Inventors: **Sebastien Willy Fontaine**, Burden (LU); **Nicolas Claude Jean-Claude Froger**, Arlon (BE); **Bernard Jean Francois Croissant**, Bastogne (BE); **Alexander Ossipov**, Leuven (BE)

(73) Assignee: **The Goodyear Tire & Rubber Company**, Akron, OH (US)

(**) Term: **14 Years**

(21) Appl. No.: **29/323,549**

(22) Filed: **Aug. 27, 2008**

(51) **LOC (9) Cl.** **12-15**
(52) **U.S. Cl.** **D12/582**
(58) **Field of Classification Search** D12/568, D12/581–603, 900–901; 152/209.1, 209.8–209.18, 152/209.25, 209.28
See application file for complete search history.

(56) **References Cited**

U.S. PATENT DOCUMENTS

D289,026	S	*	3/1987	Wohlfahrt	D12/582
D380,424	S	*	7/1997	Brown et al.	D12/583
D388,035	S		12/1997	Heinen et al.	D12/147
D397,972	S	*	9/1998	Wakatsuki et al.	D12/583
D426,179	S	*	6/2000	Fierro et al.	D12/596
D426,794	S	*	6/2000	Meer et al.	D12/583
D478,040	S	*	8/2003	Hino	D12/583
D483,007	S		12/2003	Brayer et al.	D12/588
D484,848	S		1/2004	Heinen et al.	D12/556
D492,247	S		6/2004	Schmalix et al.	D12/588
D525,192	S		7/2006	Shondel et al.	D12/552
D535,938	S	*	1/2007	Dumigan et al.	D12/582
D555,582	S	*	11/2007	Lee	D12/588

* cited by examiner

Primary Examiner—Stacia Cadmus
(74) *Attorney, Agent, or Firm*—Richard B. O'Planick

(57) **CLAIM**

The ornamental design for a tire, as shown and described.

DESCRIPTION

FIG. **1** is a perspective view of a tire showing our new design, it being understood that the pattern repeats uniformly throughout the circumference of the tread;

FIG. **2** is a front elevational view thereof;

FIG. **3** is a right side elevational view thereof; the opposite side elevational view being identical thereto;

FIG. **4** is an enlarged fragmentary front elevational view thereof;

FIG. **5** is a perspective view of a second embodiment of a tire showing our new design, it being understood that the pattern repeats uniformly throughout the circumference of the tread and that the opposite side perspective view is identical thereto; and,

FIG. **6** is a front elevational view of a second embodiment, it being understood that an enlarged fragmentary view thereof would be substantially identical to that shown in FIG. **4**, with the exception of the inclusion of the sidewall in solid lines.

In the drawings, the broken lines defining the sidewall, inner bead and the peripheral boundary between the claimed tire tread and the unclaimed sidewall depict environmental subject matter that forms no part of the claimed design.

1 Claim, 6 Drawing Sheets

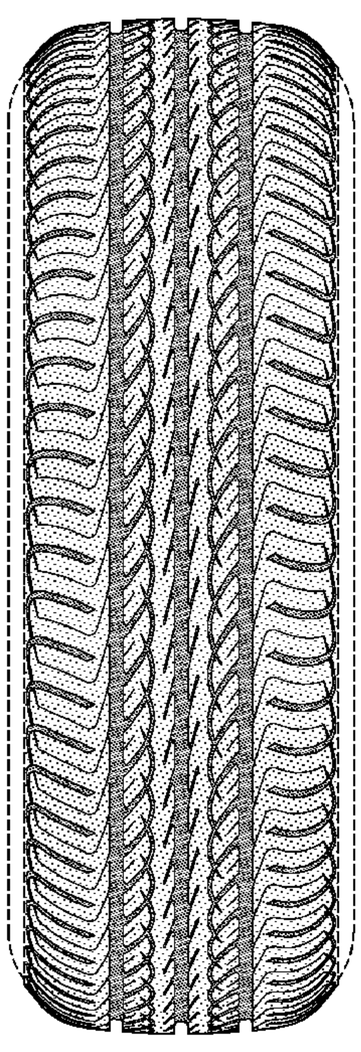

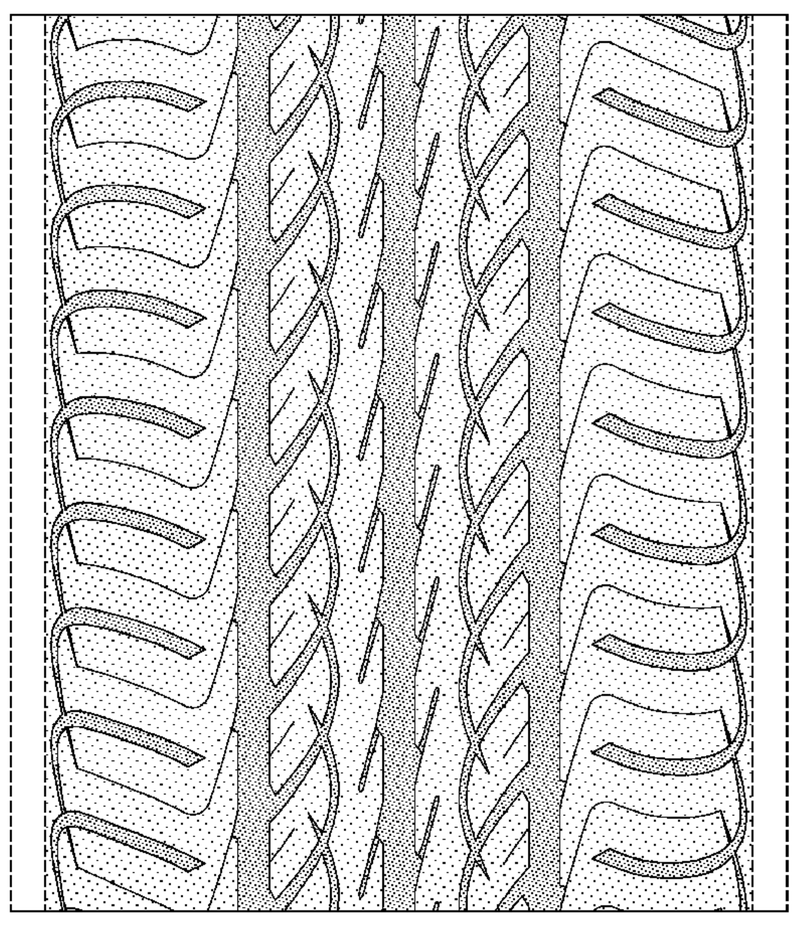

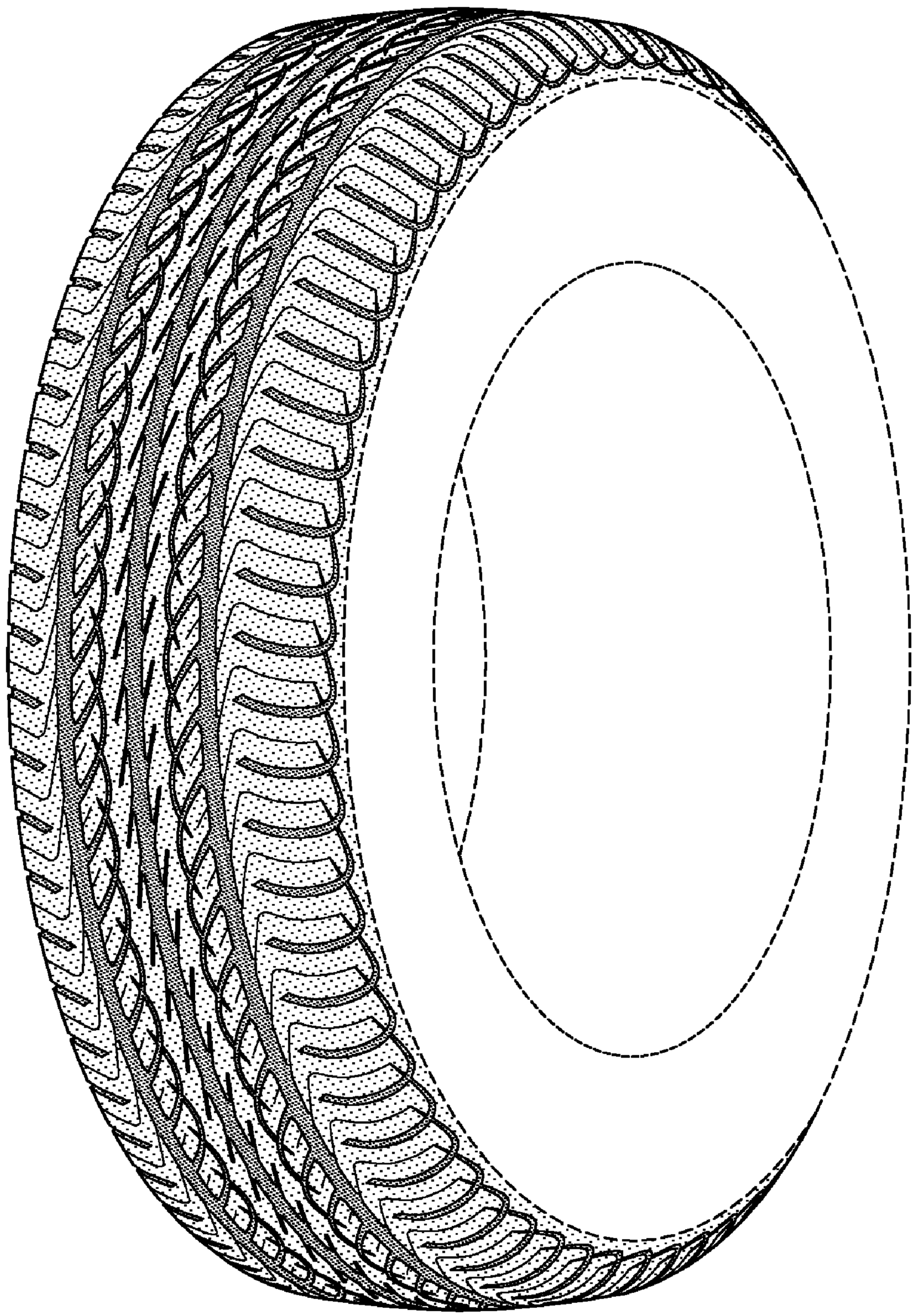

FIG-1

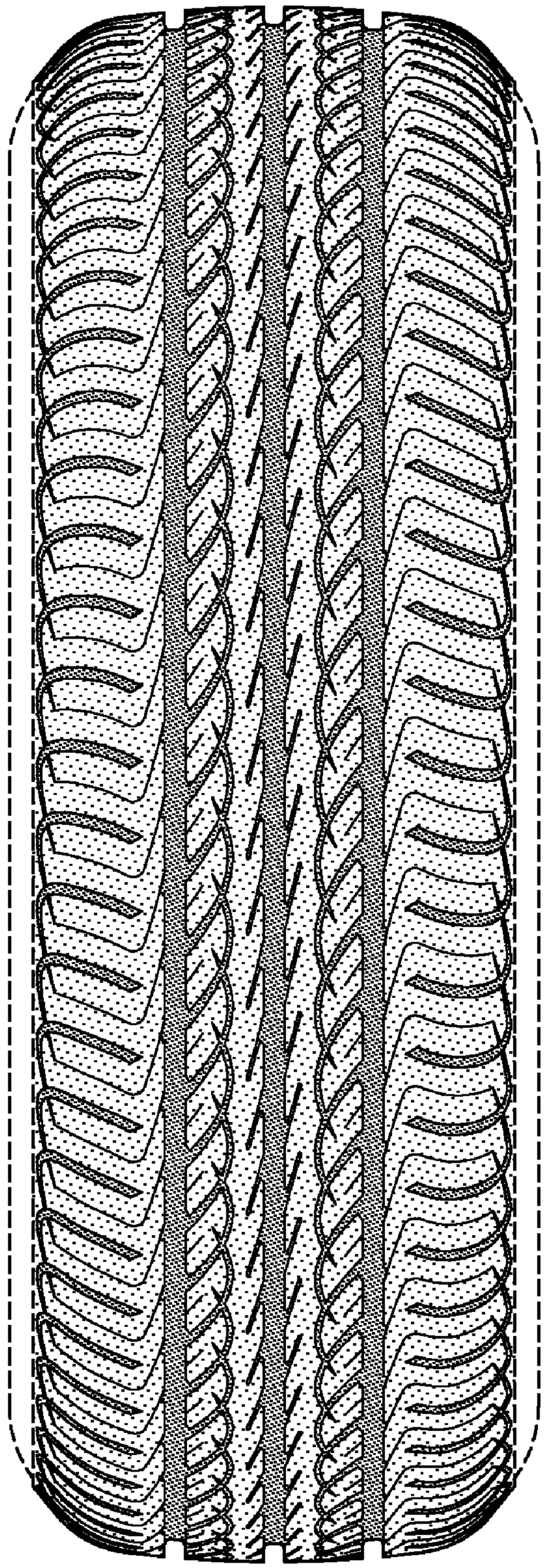

FIG–2

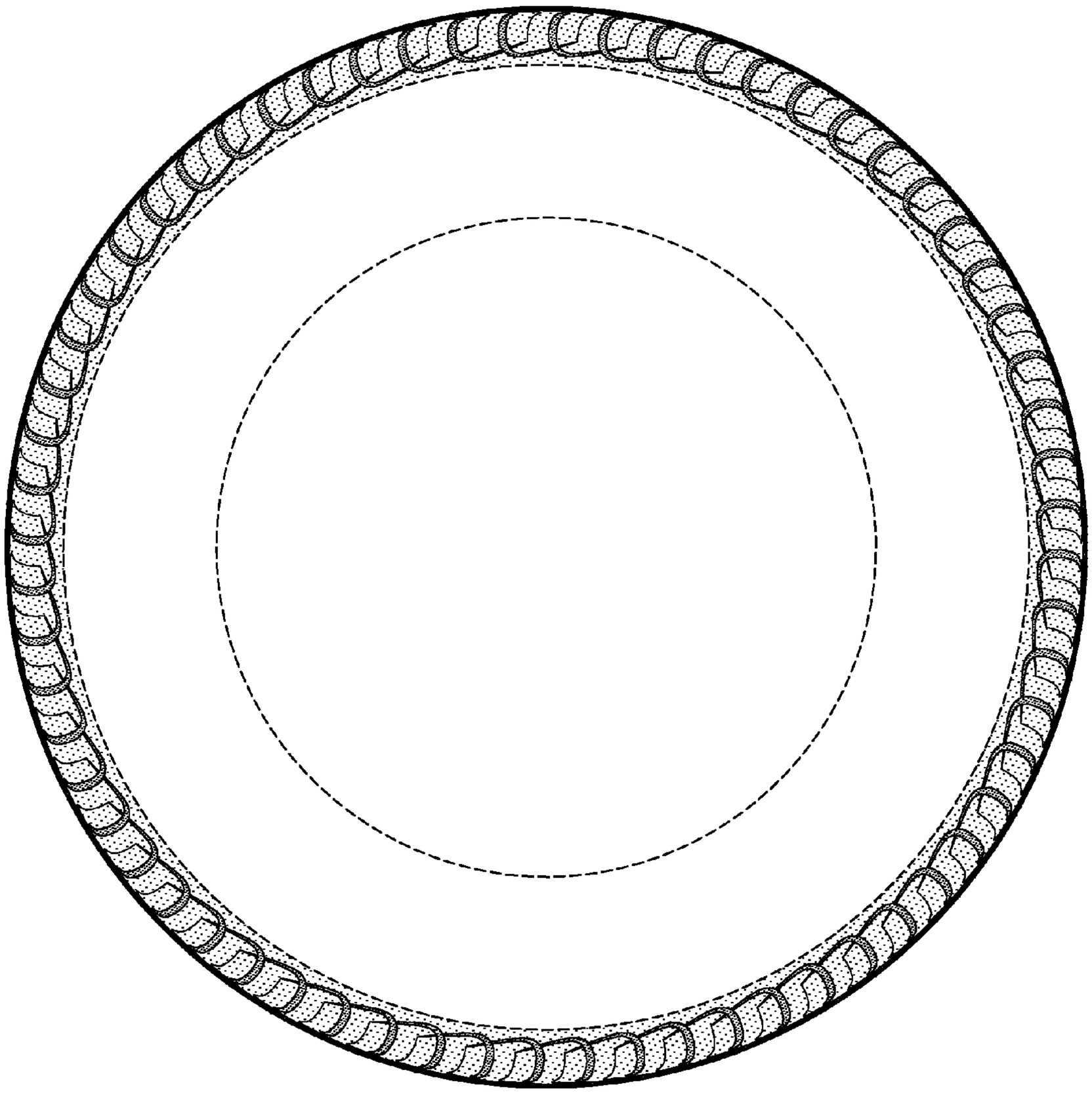

FIG–3

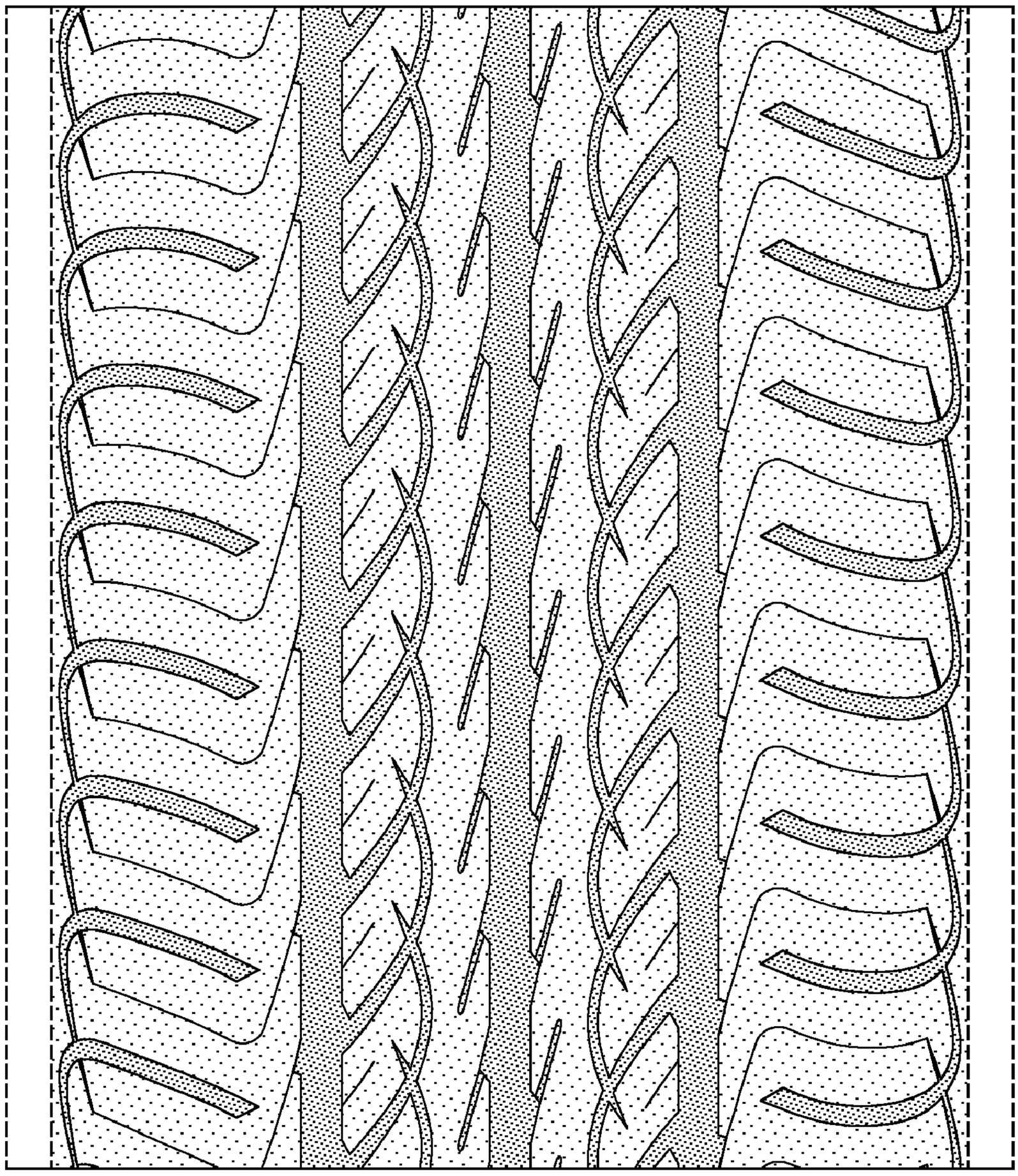

FIG-4

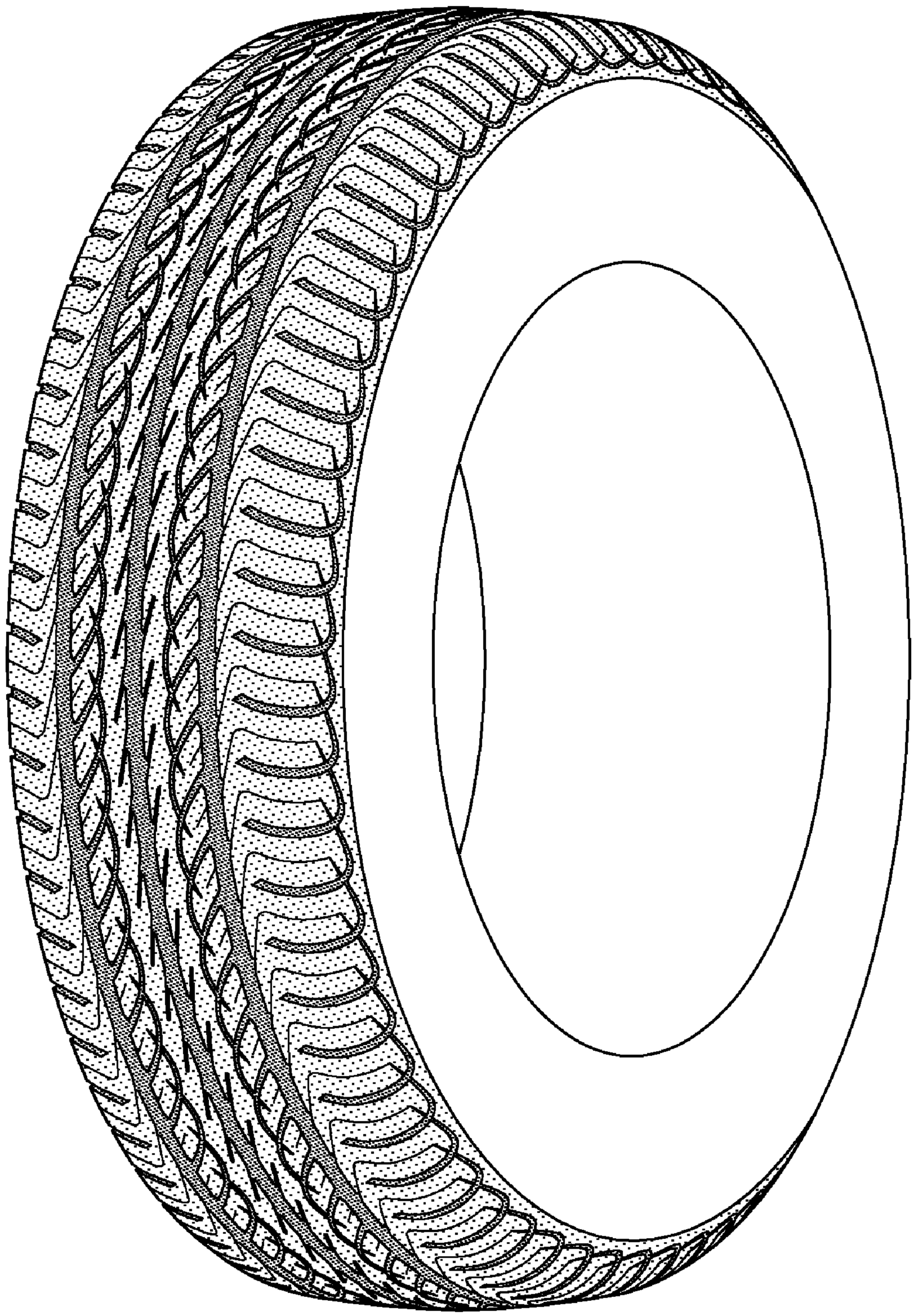

FIG–5

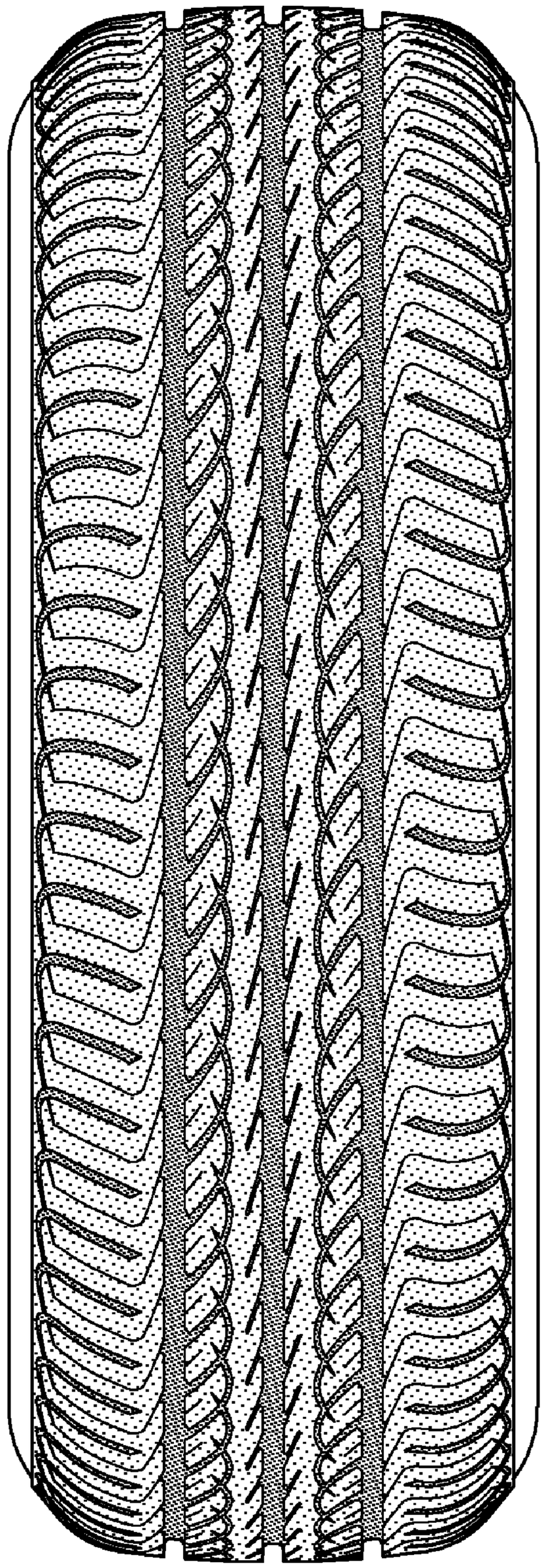

FIG-6