US00D592609S

(12) United States Design Patent

Felegy, Jr. et al.

(10) Patent No.: US D592,609 S
(45) Date of Patent: ** May 19, 2009

(54) **TABLETOP REMOTE LOAD CONTROL DEVICE**

(75) Inventors: **Edward M. Felegy, Jr.**, Macungie, PA (US); **Gregory M. Snyder**, Germansville, PA (US); **Gregory Altonen**, Easton, PA (US); **Elliot G. Jacoby**, Glenside, PA (US); **Noel Mayo**, Philadelphia, PA (US)

(73) Assignee: **Lutron Electronics Co., Inc.**, Coopersburg, PA (US)

(**) Term: **14 Years**

(21) Appl. No.: **29/306,233**

(22) Filed: **Apr. 4, 2008**

(51) **LOC (9) Cl.** **14-03**
(52) **U.S. Cl.** **D13/168**
(58) **Field of Classification Search** D13/168; D10/104, 106; D14/218, 247; 340/825.22, 340/825.24, 825.25, 825.31, 825.36, 825.69, 340/825.72; 341/76; 455/352
See application file for complete search history.

(56) **References Cited**

U.S. PATENT DOCUMENTS

D313,973	S	*	1/1991	Walker	D13/168
D320,786	S	*	10/1991	Darnell et al.	D13/171
D330,013	S	*	10/1992	Wunsch	D13/168
D348,435	S	*	7/1994	Farinelli et al.	D13/168
D353,798	S		12/1994	Bryde et al.	
D359,052	S	*	6/1995	Nagele et al.	D14/253
D397,996	S	*	9/1998	Smith	D13/168
D437,585	S		2/2001	Mayo et al.	
D439,220	S		3/2001	Mayo et al.	
D450,043	S		11/2001	Mosebrook	
D464,635	S	*	10/2002	Oyama et al.	D14/147
D537,046	S		2/2007	Blair et al.	
D539,234	S		3/2007	Blair et al.	
D539,758	S		4/2007	Blair et al.	
D554,315	S		5/2007	Blair et al.	
D543,951	S		6/2007	Blair et al.	
D546,280	S	*	7/2007	Marchetto et al.	D13/107
D546,296	S		7/2007	Blair et al.	
D553,123	S	*	10/2007	Solland	D14/217
D554,107	S	*	10/2007	Calco et al.	D14/217
D557,259	S	*	12/2007	Hirsch	D14/217
2008/0111491	A1		5/2008	Spira	

OTHER PUBLICATIONS

Lutron Electronics Co., Inc., RadioRA Visor Control Transmitter Specification Submittal Sheet, Jan. 2002, 2 pages.

(Continued)

Primary Examiner—Selina Sikder
(74) *Attorney, Agent, or Firm*—Mark E. Rose; Philip N. Smith

(57) **CLAIM**

We claim the ornamental design for a table remote load control device, as shown and described.

DESCRIPTION

FIG. **1** is a perspective view of a tabletop remote load control device according to a first embodiment of our new design.

FIG. **2** is a front view thereof.

FIG. **3** is a left side view thereof.

FIG. **4** is a right side view thereof.

FIG. **5** is a top view thereof.

FIG. **6** is a bottom view thereof.

FIG. **7** is a rear view thereof.

FIG. **8** is a perspective view of a tabletop remote load control device according to a second embodiment of our new design.

FIG. **9** is a front view thereof; and,

FIG. **10** is a bottom view thereof, the left side, right side, top, and rear views, respectively, of the second embodiment being identical to the left side, right side, top, and rear views of the first embodiment.

1 Claim, 8 Drawing Sheets

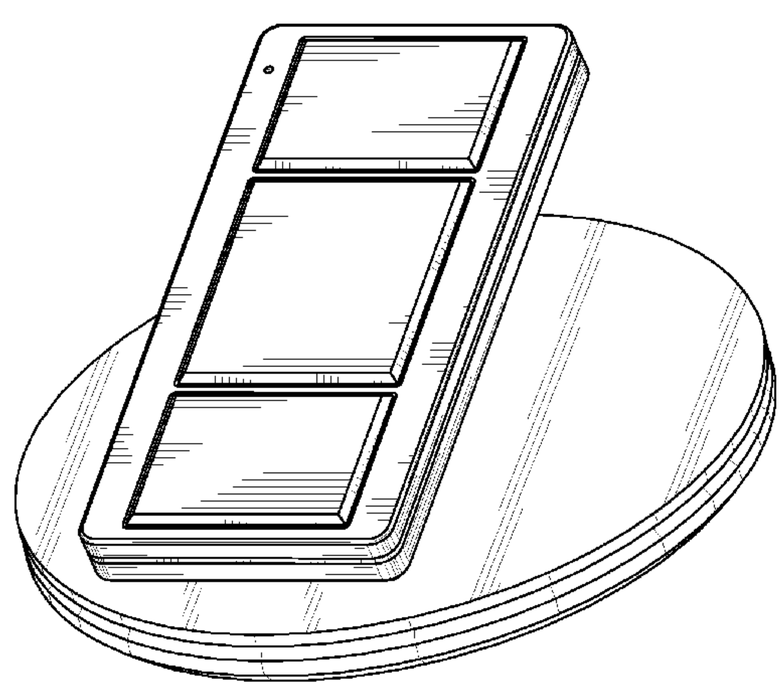

OTHER PUBLICATIONS

Lutron Electronics Co., Inc., RadioRA Visor Control Transmitter Installation Instruction Sheet, Nov. 2001, 2 pages.
Lutron Electronics Co., Inc., Aurora Wireless Lighting Control Brochure, Nov. 2006, 2 pages.
Lutron Electronics Co., Inc., Maestro Wireless Remote Lighting Control Brochure, Sep. 2007, 2 pages.

U.S. Appl. No. 29/306,219, file Apr. 4, 2008, Felegy, Jr. et al.
U.S. Appl. No. 29/306,223, file Apr. 4, 2008, Felegy, Jr. et al.
U.S. Appl. No. 29/306,225, file Apr. 4, 2008, Felegy, Jr. et al.
U.S. Appl. No. 29/306,226, file Apr. 4, 2008, Altonen et al.
U.S. Appl. No. 29/306,228, file Apr. 4, 2008, Felegy, Jr. et al.
U.S. Appl. No. 61/042,421, file Apr. 4, 2008, Altonen et al.

* cited by examiner

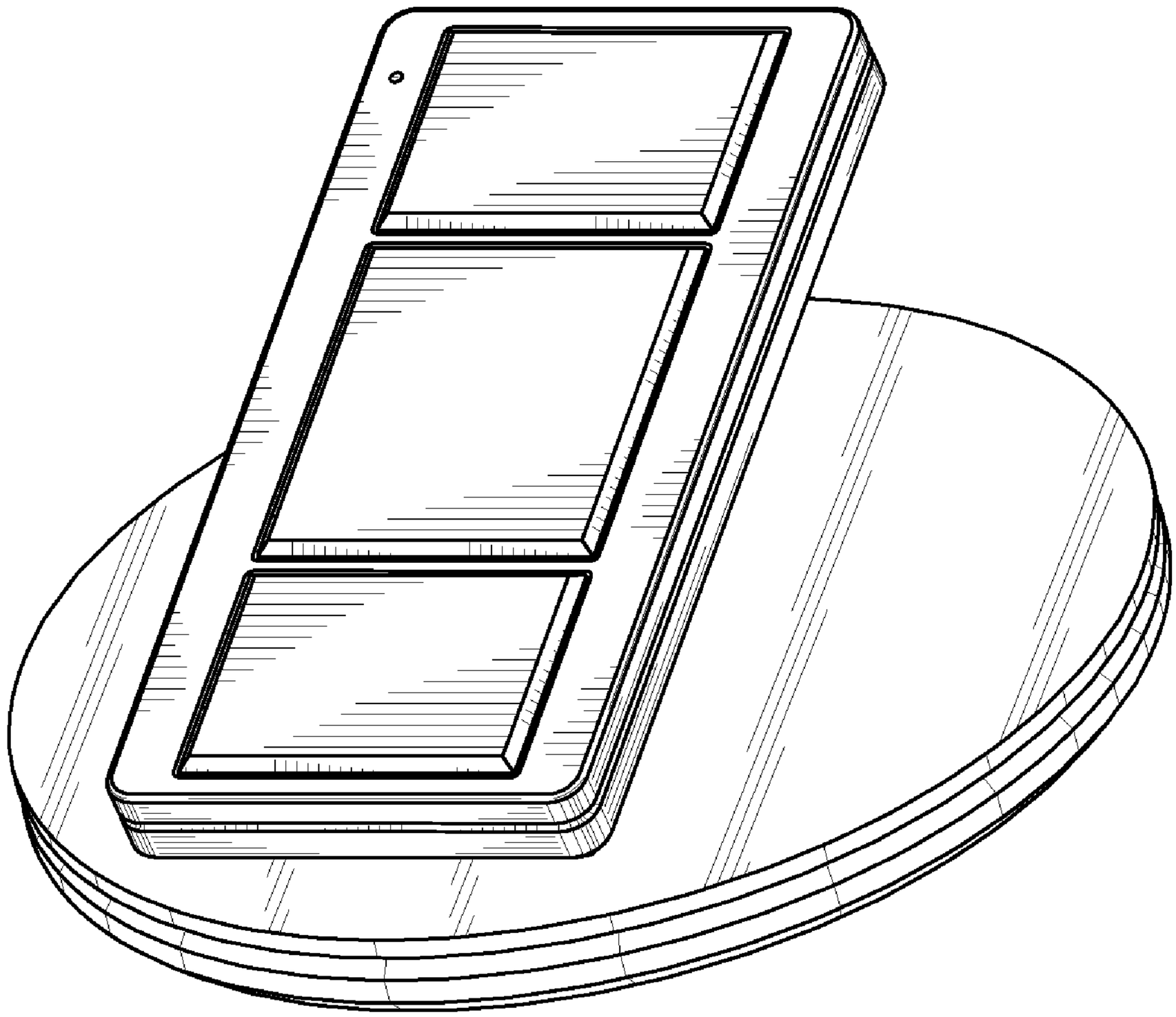

Fig. 1

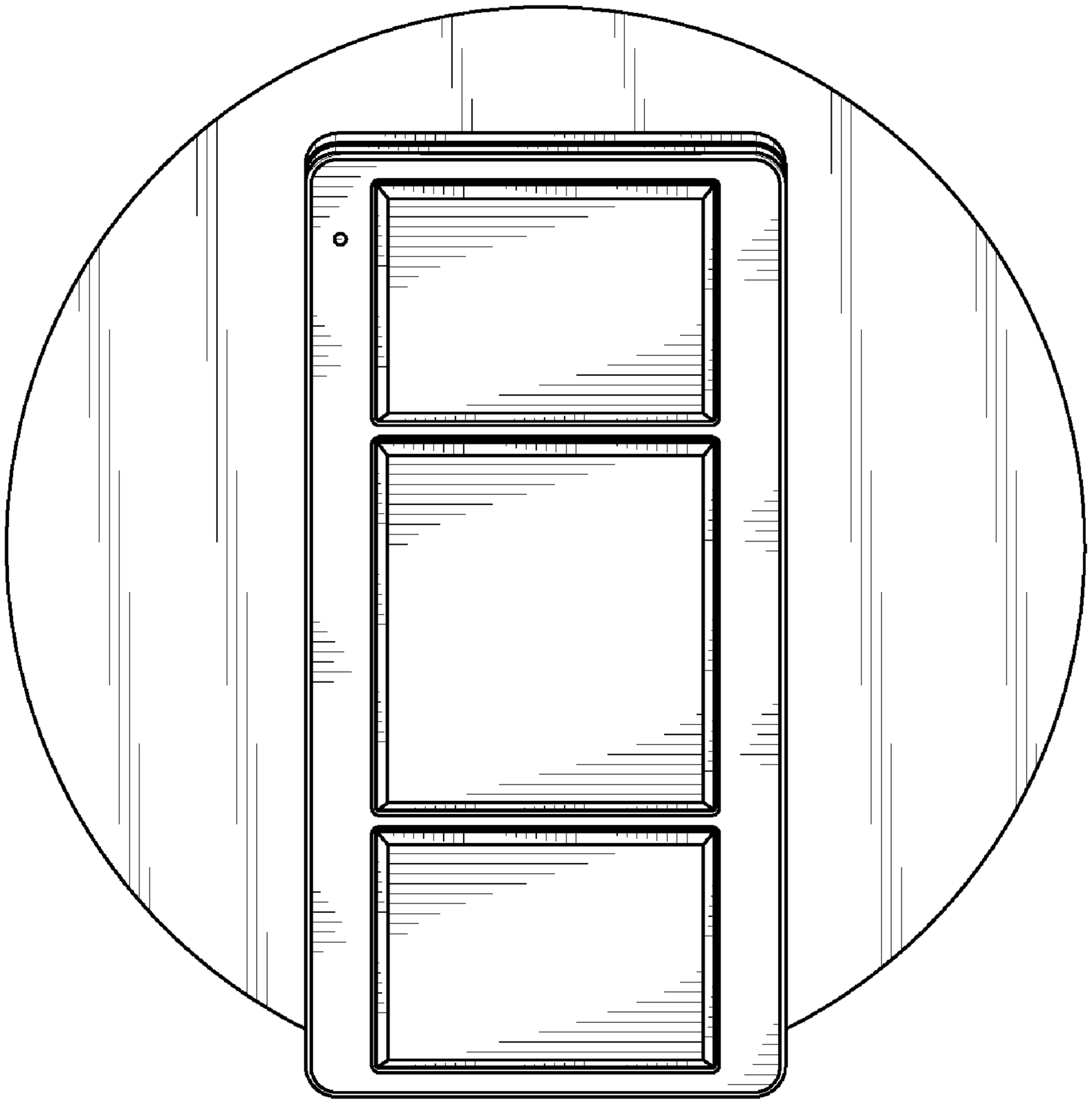

Fig. 2

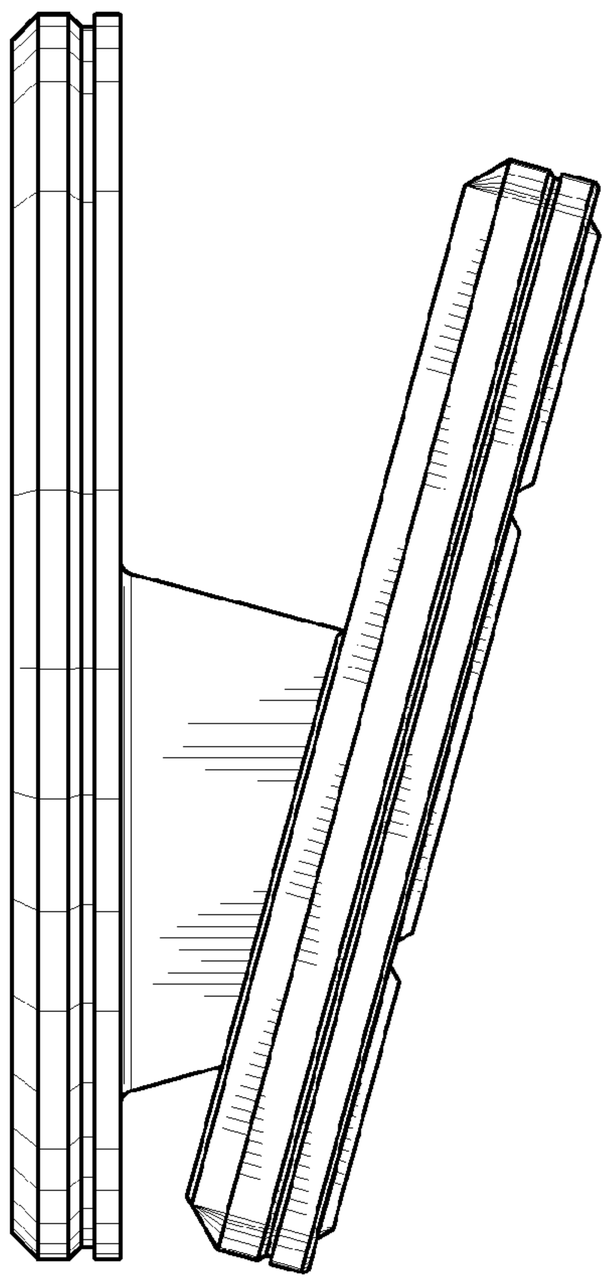

Fig. 3

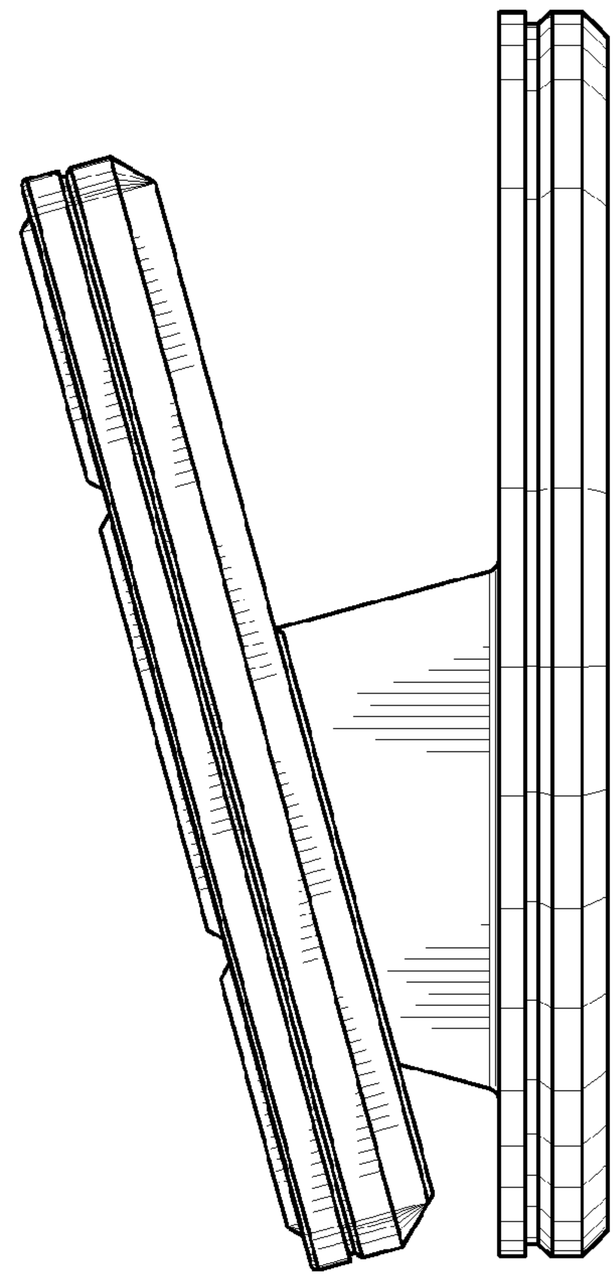

Fig. 4

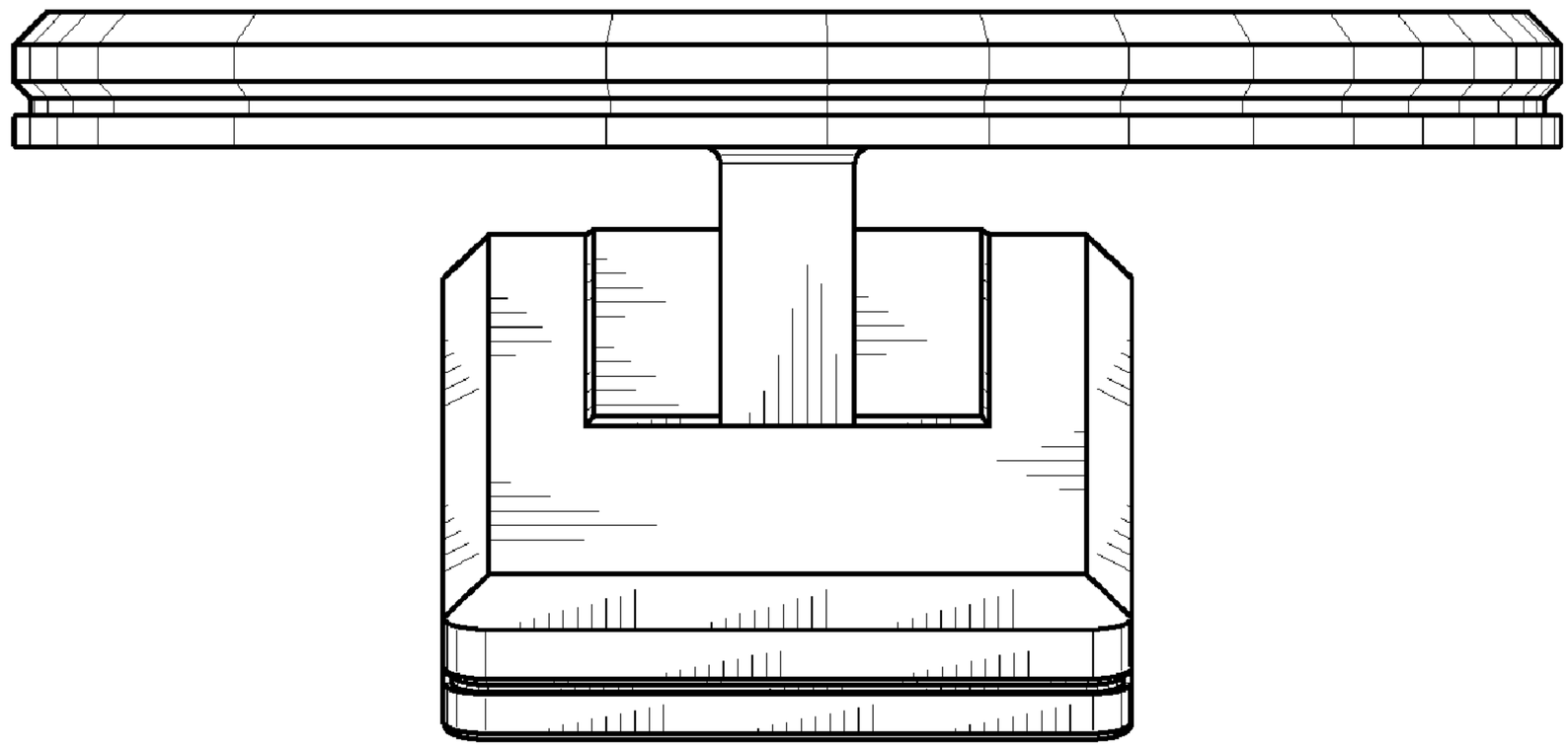

Fig. 5

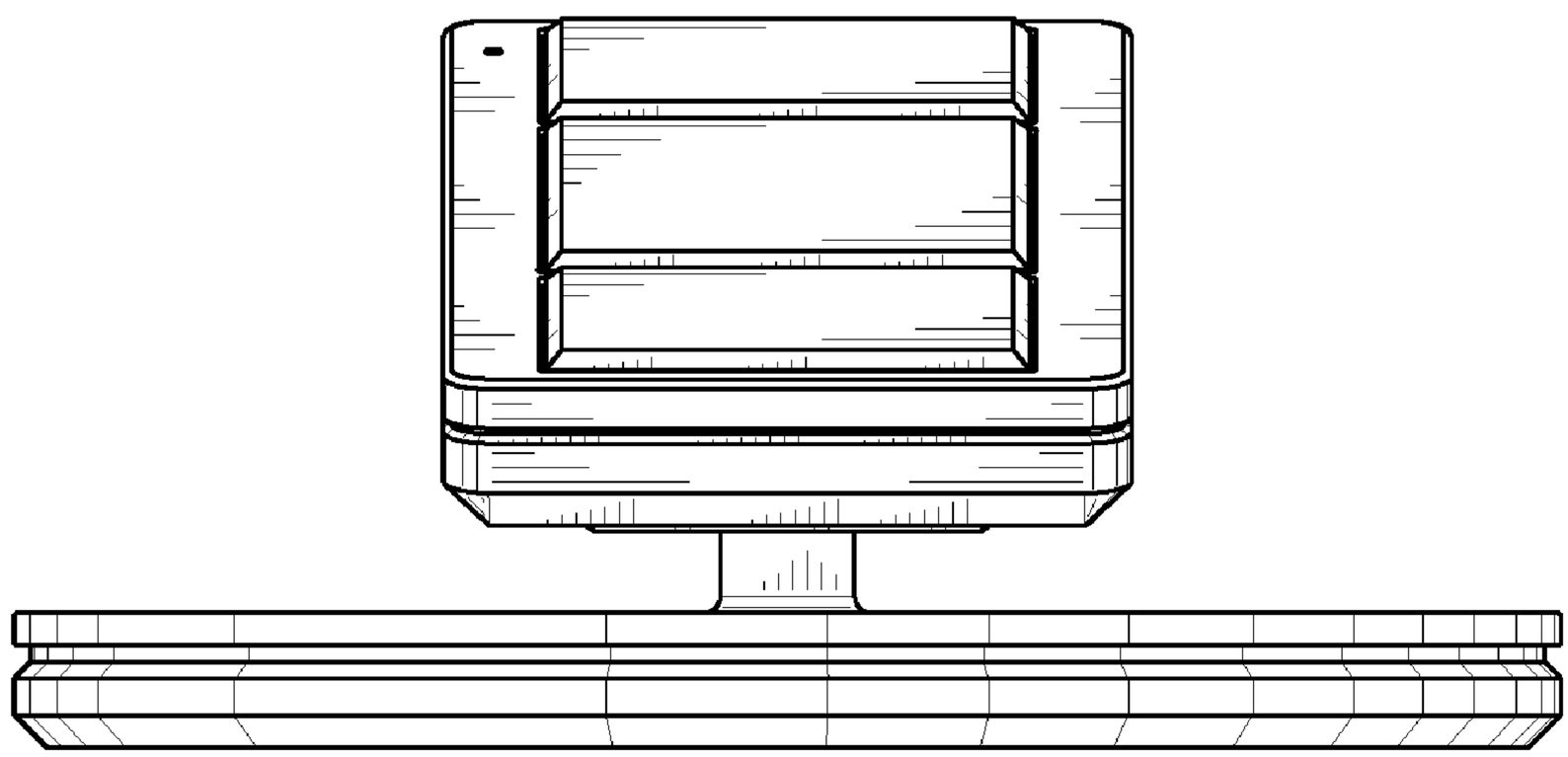

Fig. 6

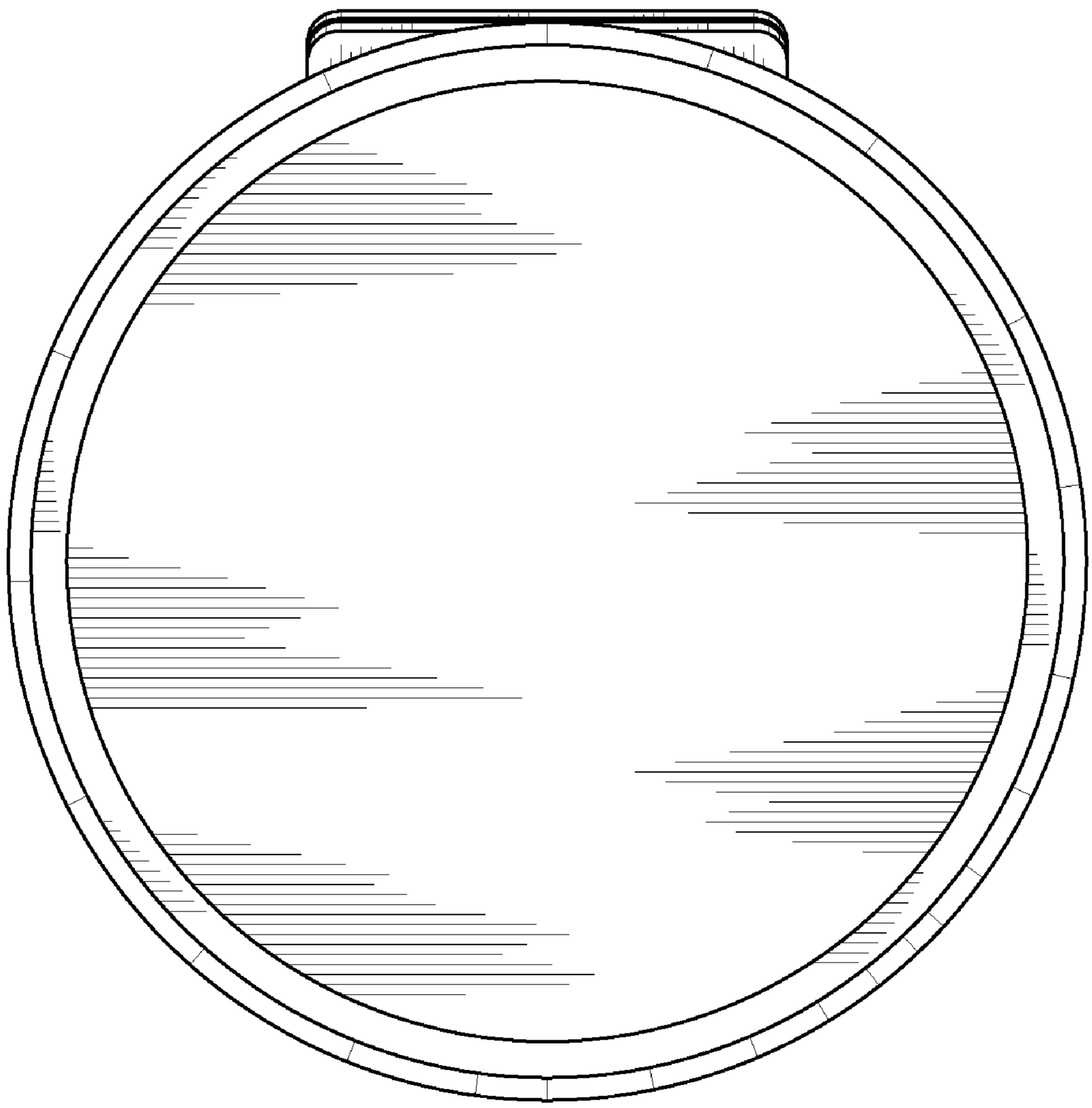

Fig. 7

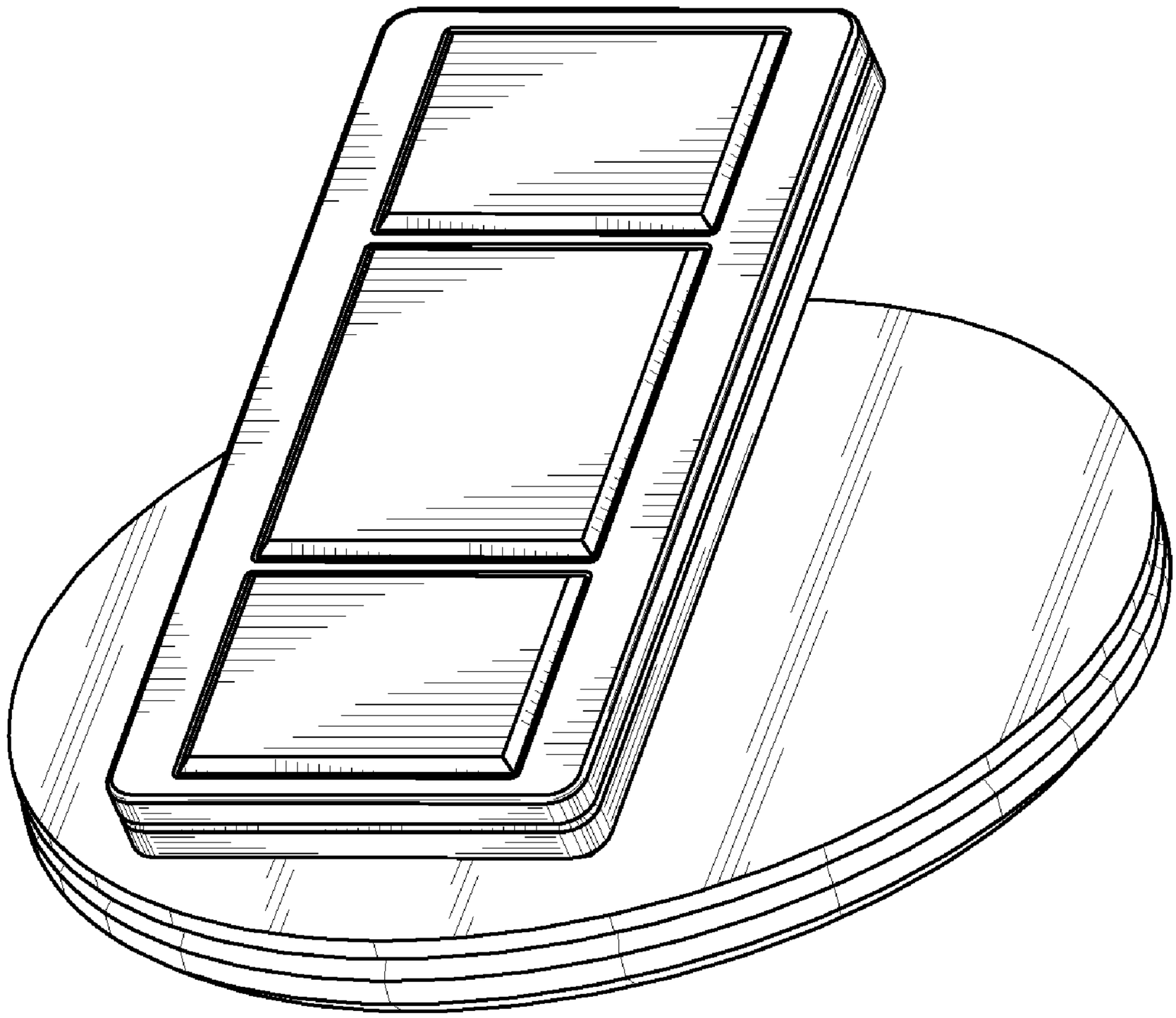

Fig. 8

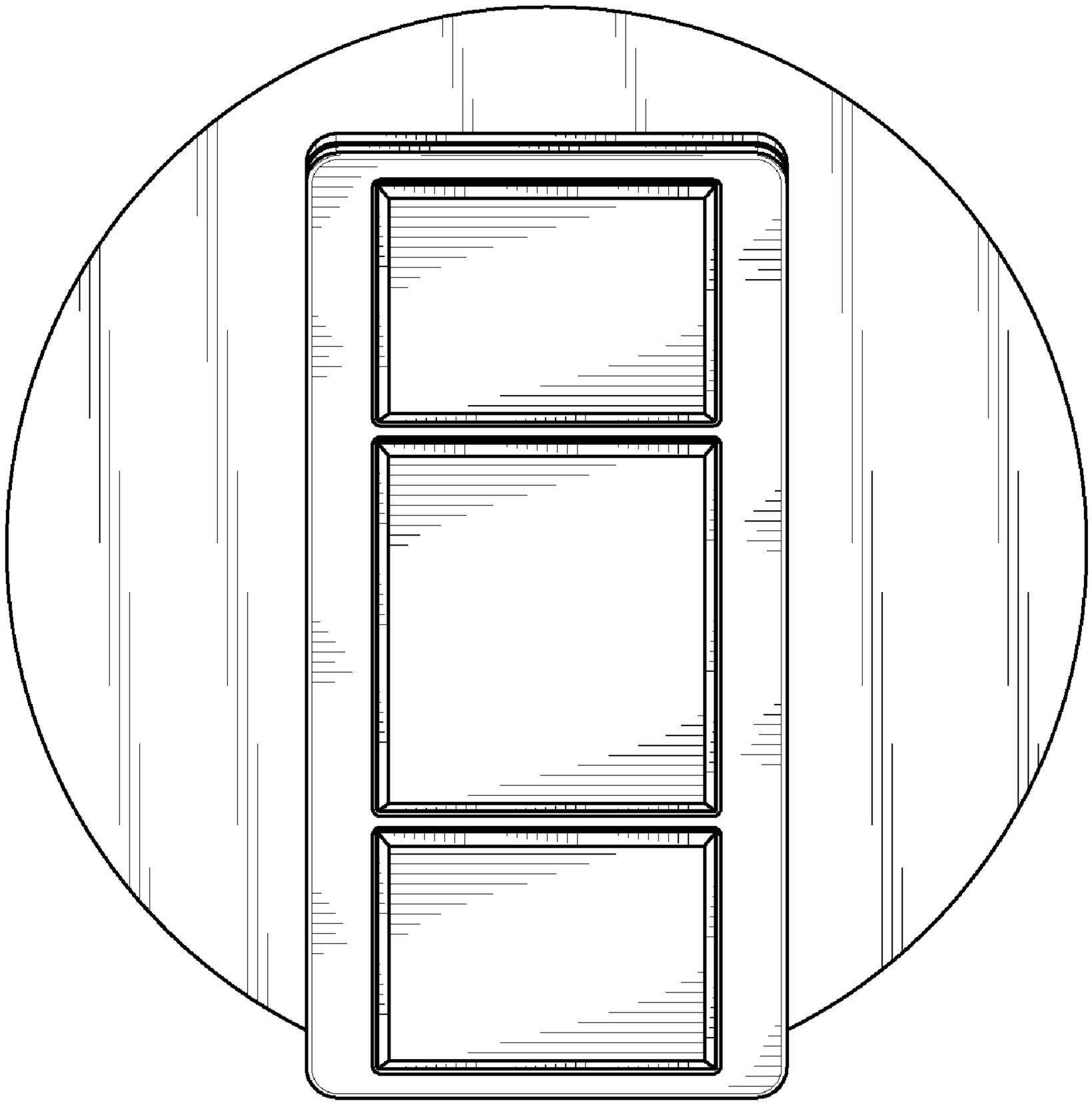

Fig. 9

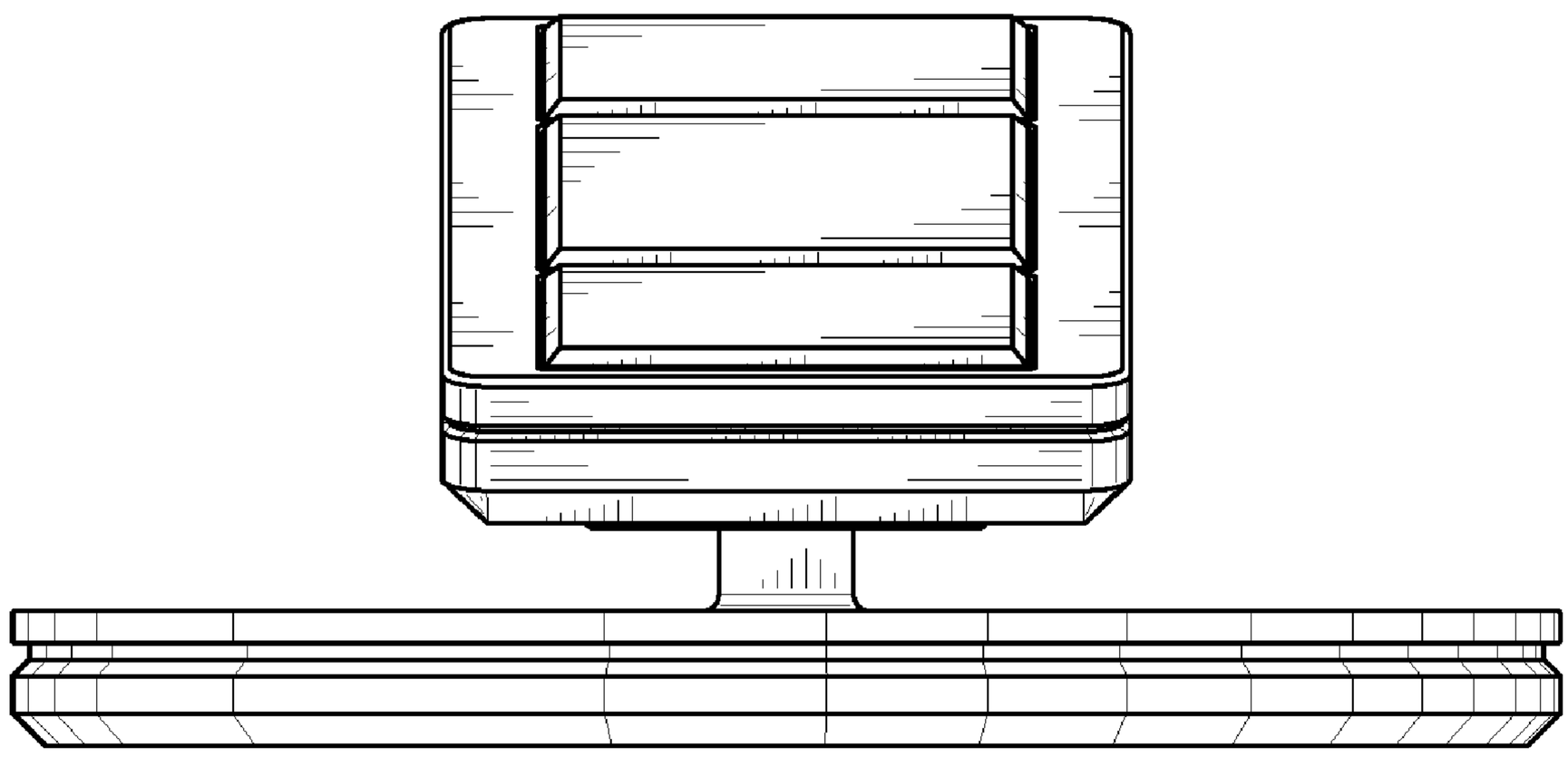

Fig. 10