US00D591250S

(12) United States Design Patent
Yoshimura

(10) Patent No.: US D591,250 S
(45) Date of Patent: ** Apr. 28, 2009

(54) **TELEVISION RECEIVER**

(75) Inventor: **Satoshi Yoshimura**, Kanagawa (JP)

(73) Assignee: **Victor Company of Japan, Limited**, Kanagawa (JP)

(**) Term: **14 Years**

(21) Appl. No.: **29/312,720**

(22) Filed: **Nov. 7, 2008**

(30) **Foreign Application Priority Data**

Jul. 25, 2008 (JP) 2008-019097

(51) **LOC (9) Cl.** **14-03**
(52) **U.S. Cl.** **D14/126**
(58) **Field of Classification Search** ..... D14/125–134, D14/239, 371, 136, 374–377, 440, 450, 448, D14/336, 342; 312/7.2; 348/836, 838, 180, 348/184, 325, 739; 341/12; 248/917–924, 248/465; 345/104, 133, 156, 168, 87, 173; 720/605, 669, 600, 655; 369/99, 197; 455/344, 455/347; D21/329, 515, 577, 622, 333, 433, D21/448, 452, 450, 331; D6/477, 479; 273/148 B; 446/484, 175, 356; D10/15, 26
See application file for complete search history.

(56) **References Cited**

U.S. PATENT DOCUMENTS

D523,827 S * 6/2006 Lin et al. D14/126
D541,237 S * 4/2007 Kita D14/134
D546,301 S * 7/2007 Kita D14/126
D557,227 S * 12/2007 Isshiki D14/126
D562,788 S * 2/2008 Asanuma et al. D14/126
D567,200 S * 4/2008 Rieu Piquet D14/126

* cited by examiner

Primary Examiner—Raphael Barkai
(74) *Attorney, Agent, or Firm*—Osha • Liang LLP

(57) **CLAIM**

The ornamental design for a television receiver, as shown and described.

DESCRIPTION

FIG. **1** is a perspective view of the front, right and top of a television receiver showing my new design;

FIG. **2** is a front view thereof;

FIG. **3** is a rear view thereof;

FIG. **4** is a top plan view thereof;

FIG. **5** is a bottom view thereof; and,

FIG. **6** is a right side view, left side being a mirror image thereof.

The elements shown in broken lines are for illustrative purposes only and form no part of the claimed design.

1 Claim, 5 Drawing Sheets

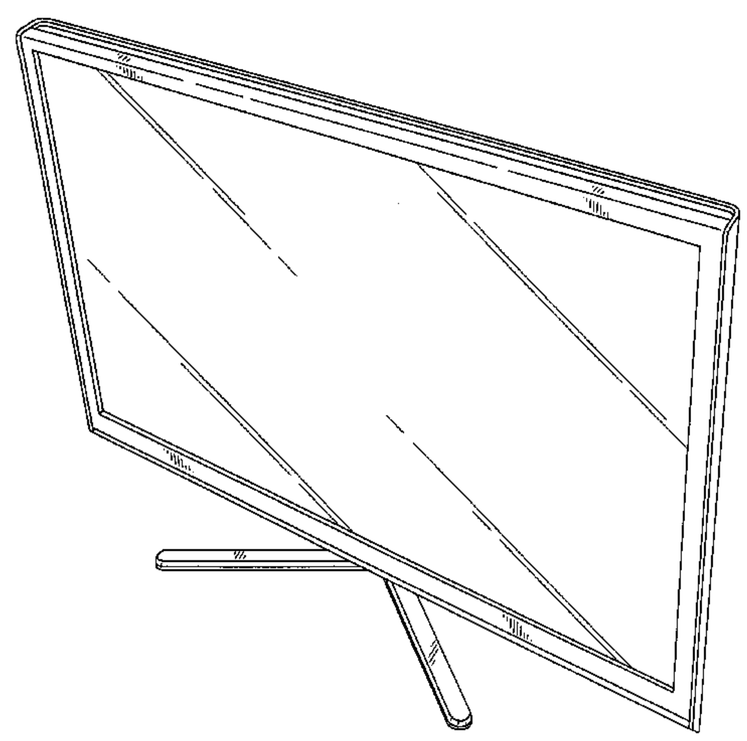

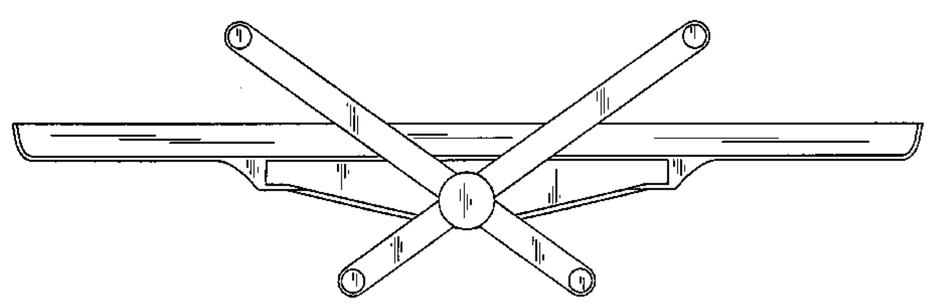

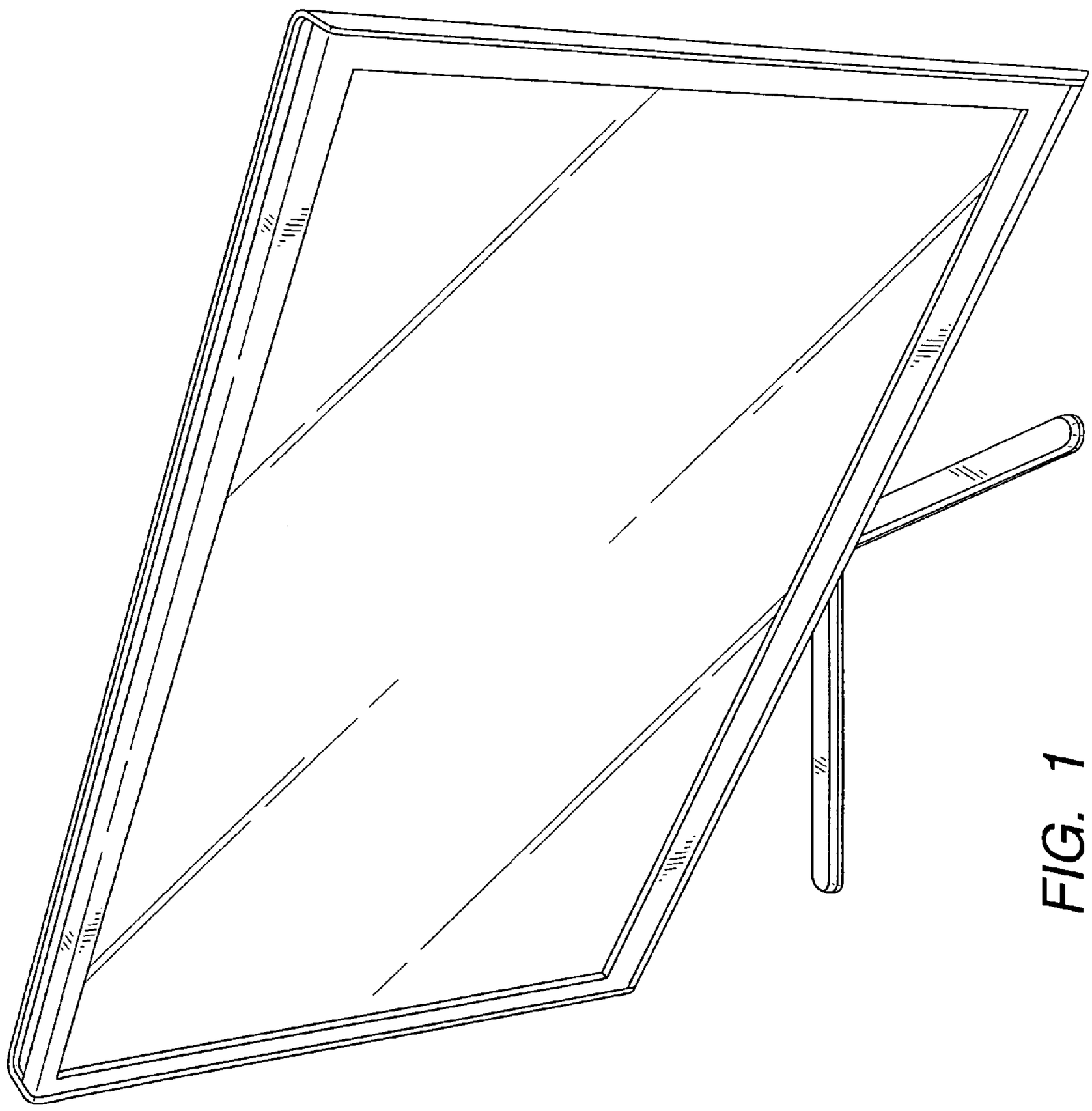

FIG. 1

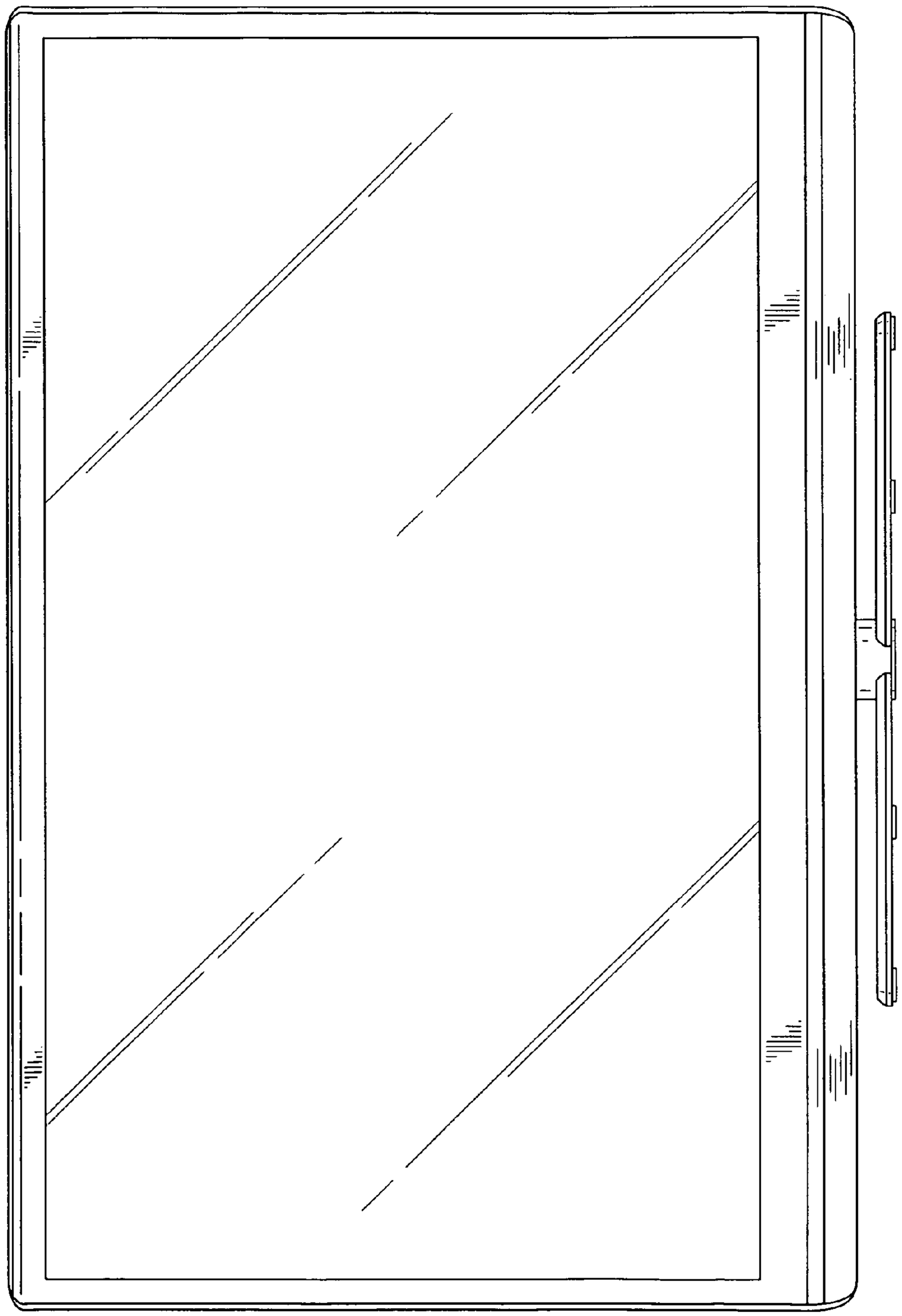

FIG. 2

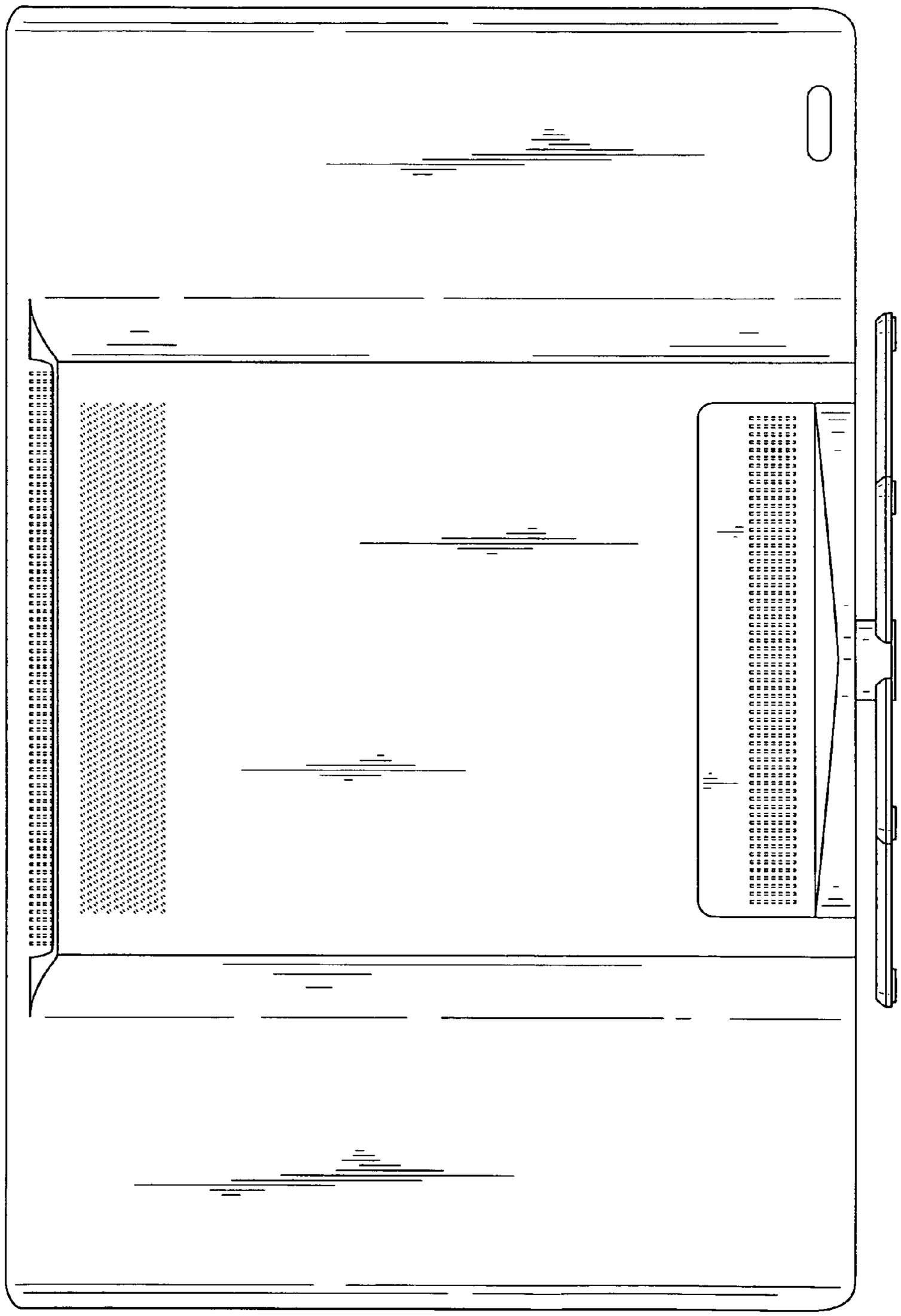

FIG. 3

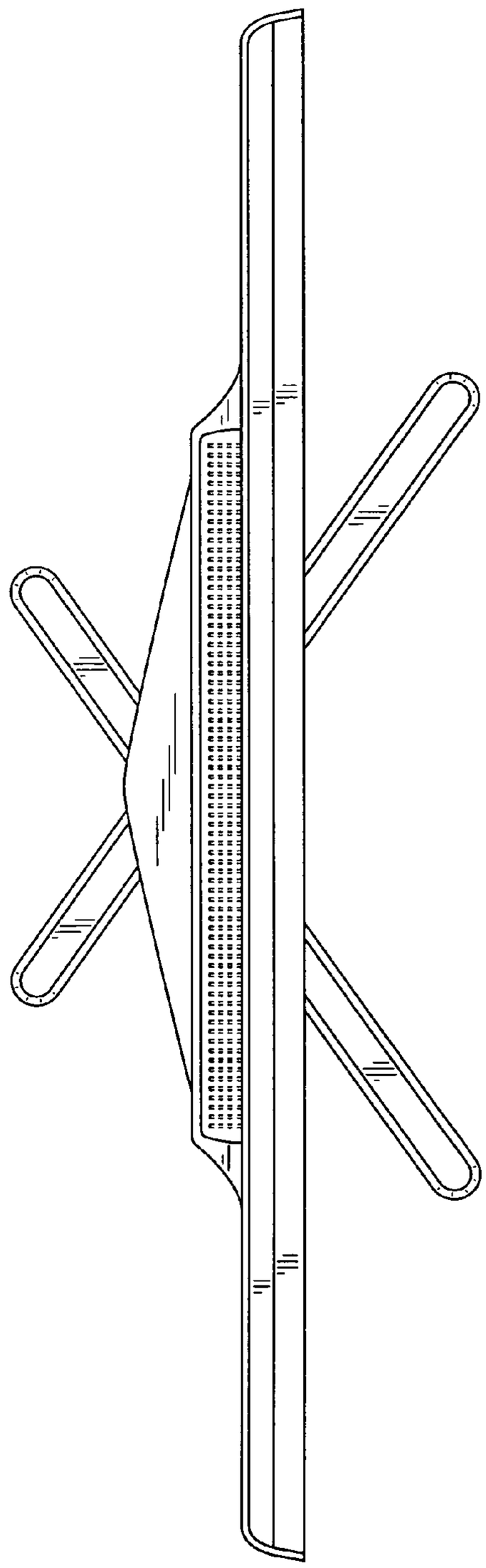

FIG. 4

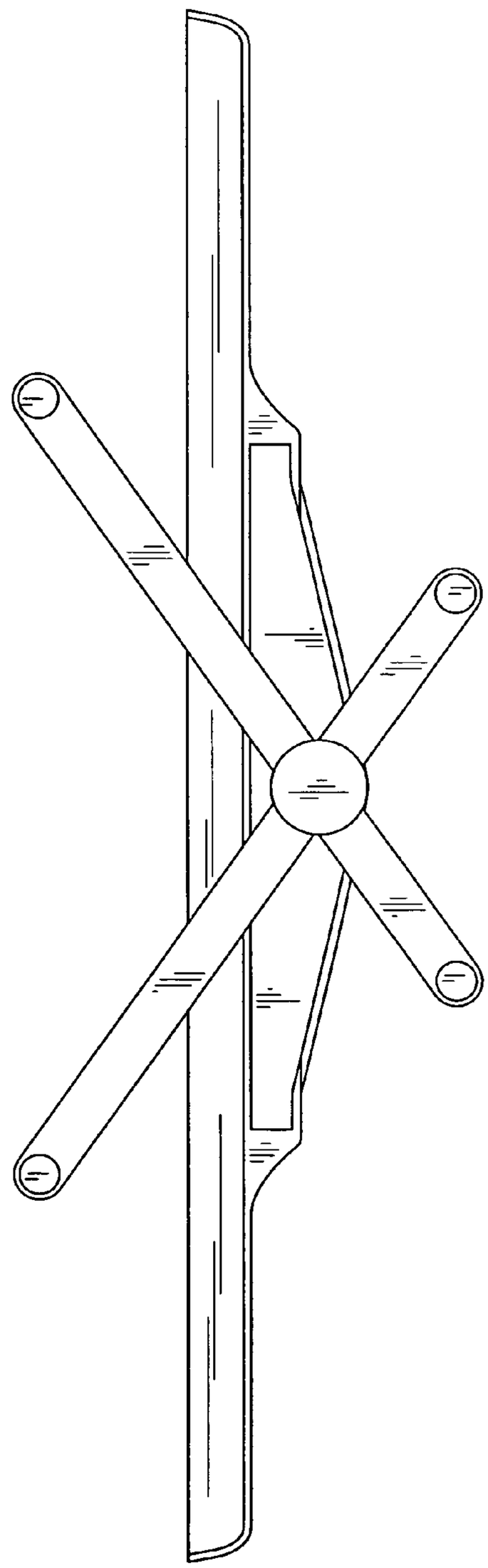

FIG. 5

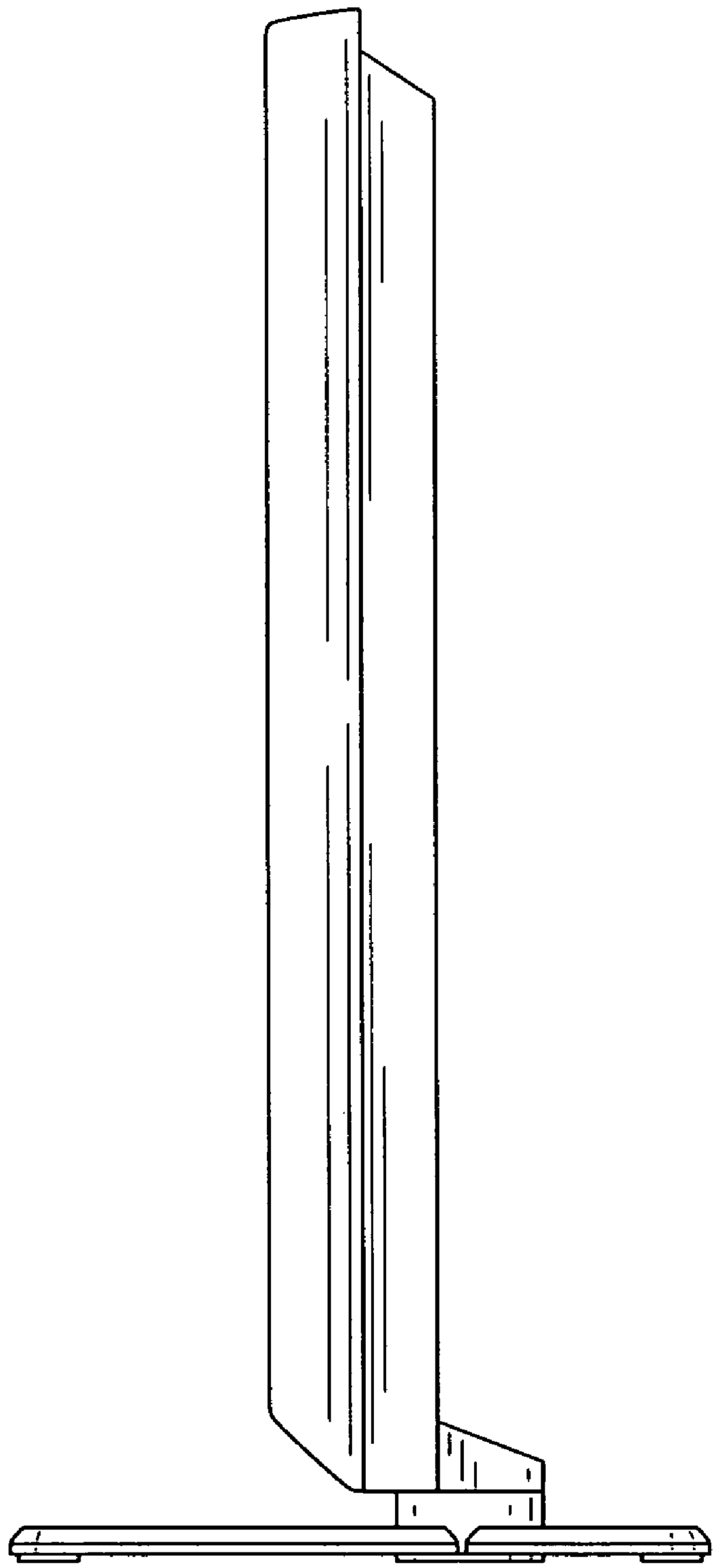

FIG. 6