US00D587209S

(12) United States Design Patent

Tsai et al.

(10) Patent No.: US D587,209 S
(45) Date of Patent: ** Feb. 24, 2009

(54) **ELECTRICAL CONNECTOR**

(75) Inventors: **Tzu-Ching Tsai**, Tu-cheng (TW); **Ren-Chih Li**, Tu-cheng (TW)

(73) Assignee: **Hon Hai Precision Ind. Co., Ltd.**, Taipei Hsien (TW)

(**) Term: **14 Years**

(21) Appl. No.: **29/308,722**

(22) Filed: **Jul. 1, 2008**

(30) **Foreign Application Priority Data**

Jan. 10, 2008 (CN) 2008 3 0019796

(51) **LOC (9) Cl.** **13-03**
(52) **U.S. Cl.** **D13/147**
(58) **Field of Classification Search** D13/146–147, D13/154, 184; 439/79, 108, 378, 607–610, 439/660, 668, 680
See application file for complete search history.

(56) **References Cited**

U.S. PATENT DOCUMENTS

D435,244 S * 12/2000 Lok D13/147
D490,377 S * 5/2004 Sato D13/147
D517,016 S * 3/2006 Nishio et al. D13/147
D517,489 S * 3/2006 Kawase et al. D13/147
D531,127 S * 10/2006 Zhong et al. D13/147
D556,690 S * 12/2007 Ikegami D13/147
D575,236 S * 8/2008 Tago et al. D13/147
D576,555 S * 9/2008 Bruseloff D13/147
2007/0293079 A1* 12/2007 Chao et al. 439/352
2008/0102685 A1* 5/2008 Weis et al. 439/378

* cited by examiner

Primary Examiner—Daniel D Bui
(74) *Attorney, Agent, or Firm*—Wei Te Chung

(57) **CLAIM**

The ornamental design for an electrical connector, as shown and described.

DESCRIPTION

FIG. **1** is a front, top and right side perspective view of an electrical connector showing our new design;

FIG. **2** is a front elevational view thereof;

FIG. **3** is a rear elevational view thereof;

FIG. **4** is a left side elevational view thereof;

FIG. **5** is a right side elevational view thereof;

FIG. **6** is a top plan view thereof;

FIG. **7** is a bottom plan view thereof; and,

FIG. **8** is a rear, top and left side perspective view thereof.

The broken line showing unclaimed internal elements is for illustrative purposes only and forms on part of the claimed design.

1 Claim, 8 Drawing Sheets

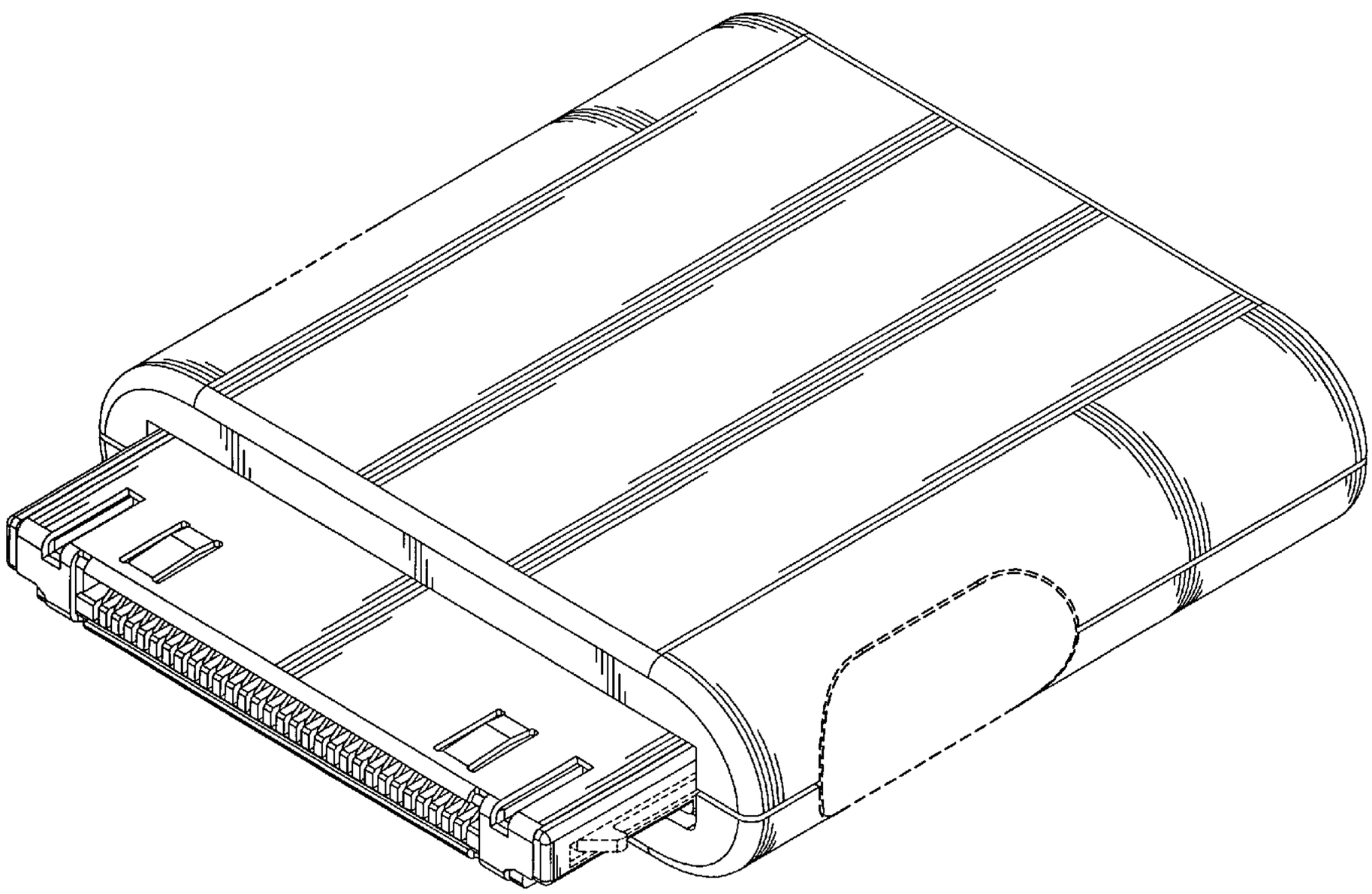

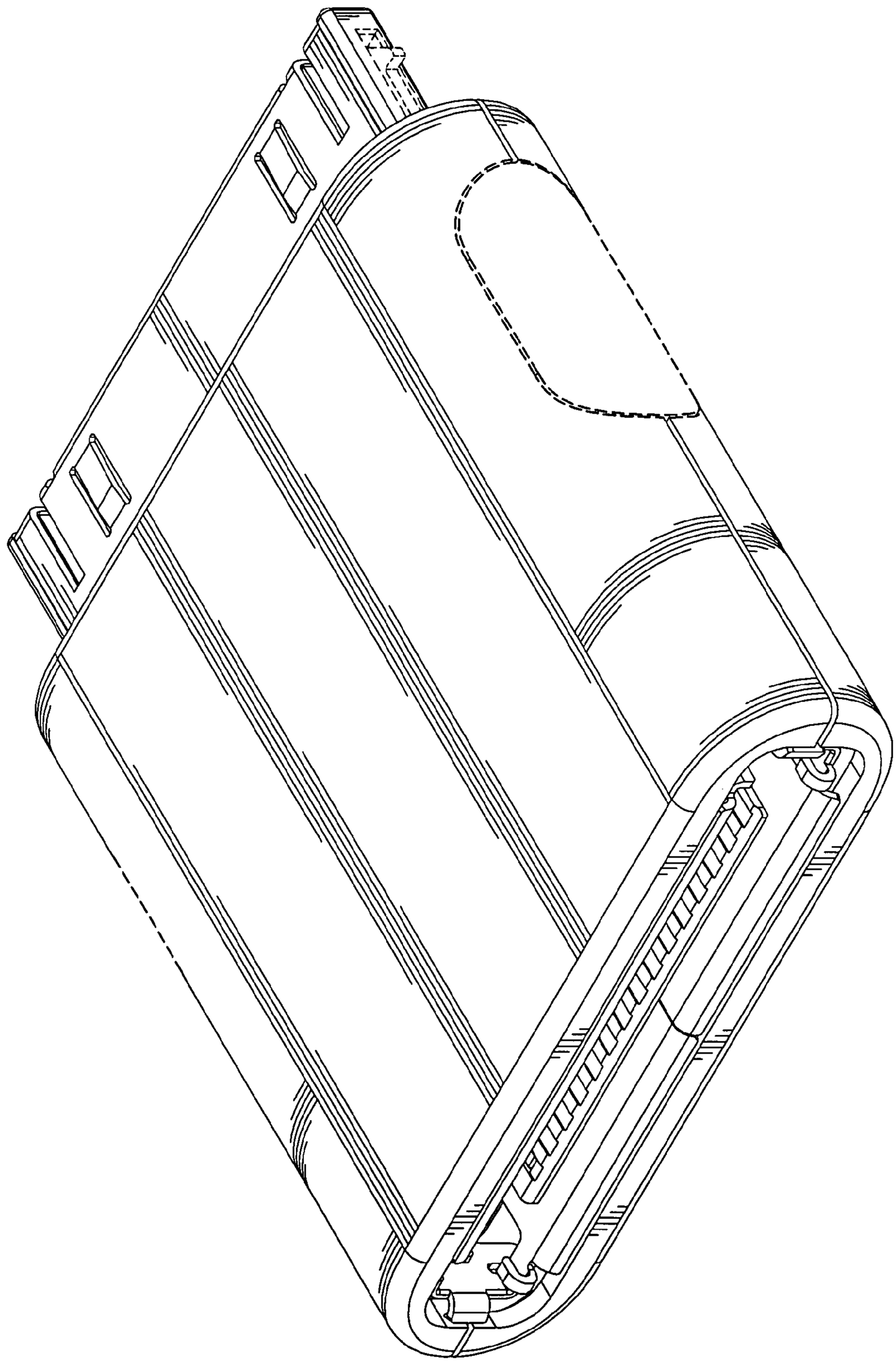

FIG. 1

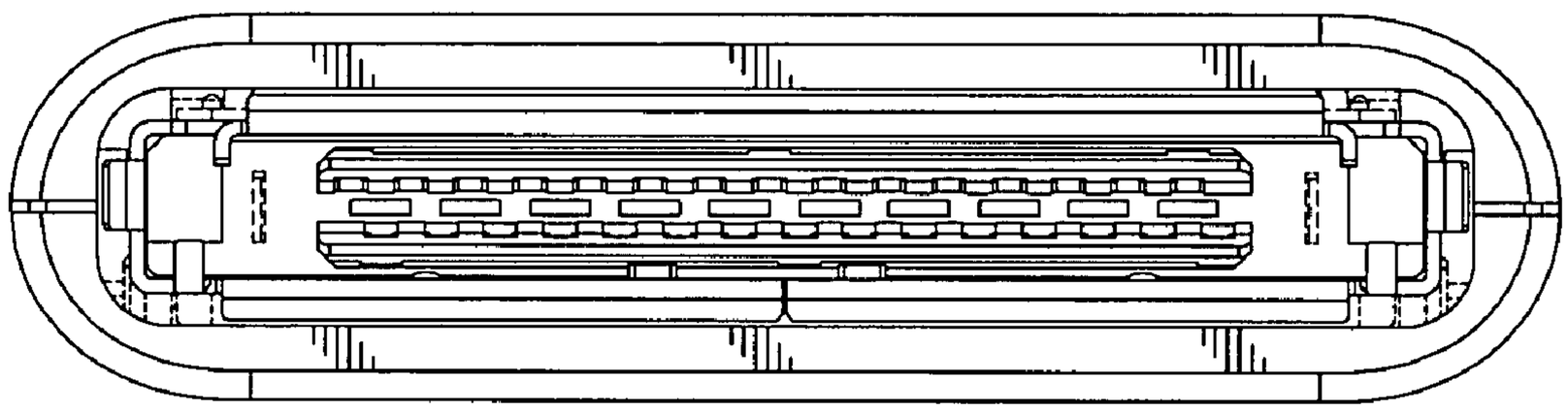

FIG. 2

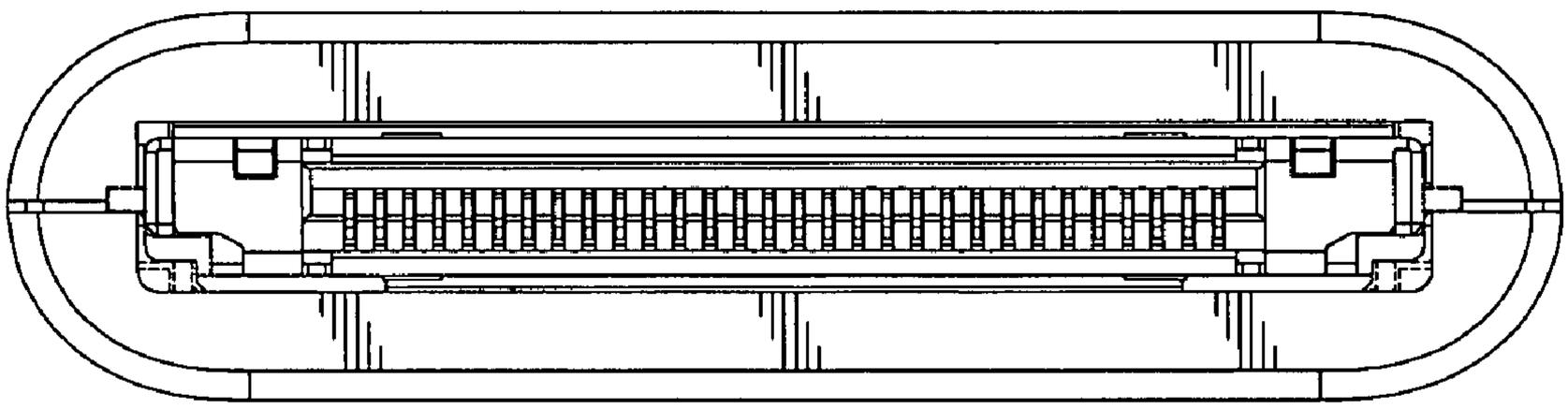

FIG. 3

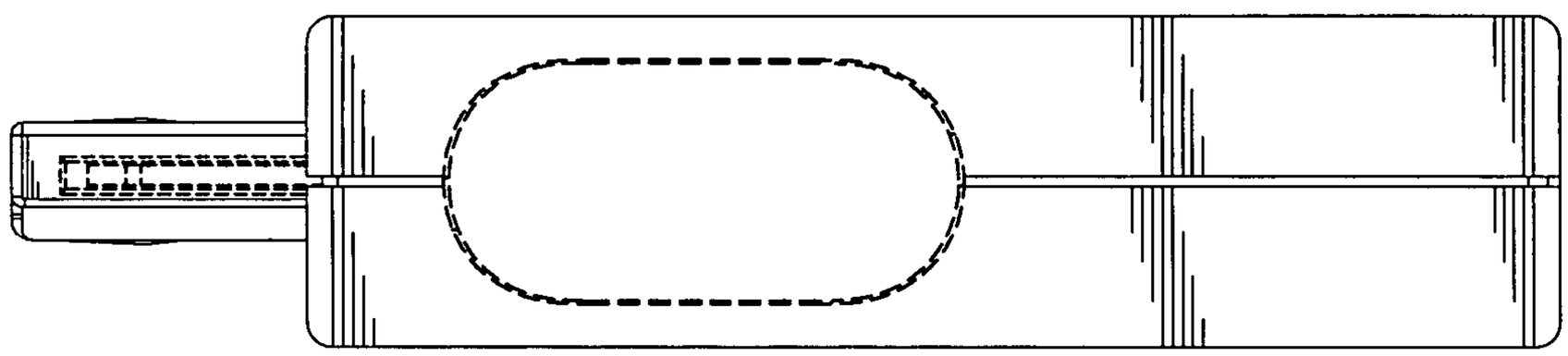

FIG. 4

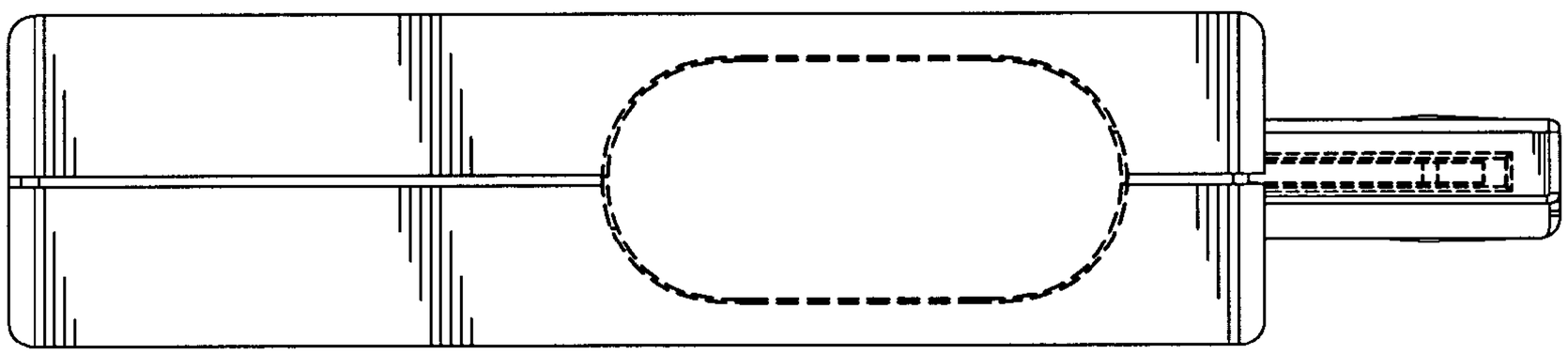

FIG. 5

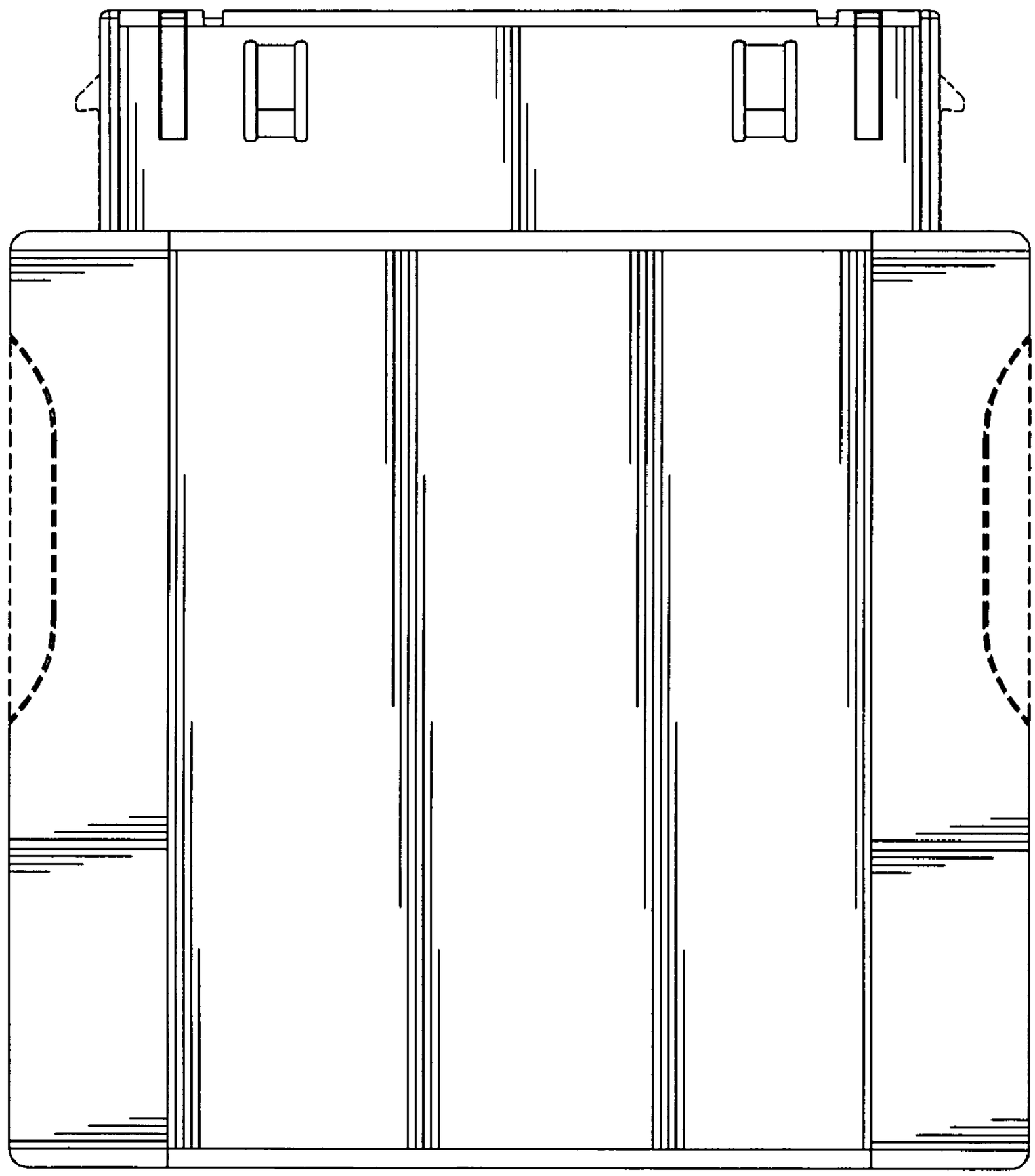

FIG. 6

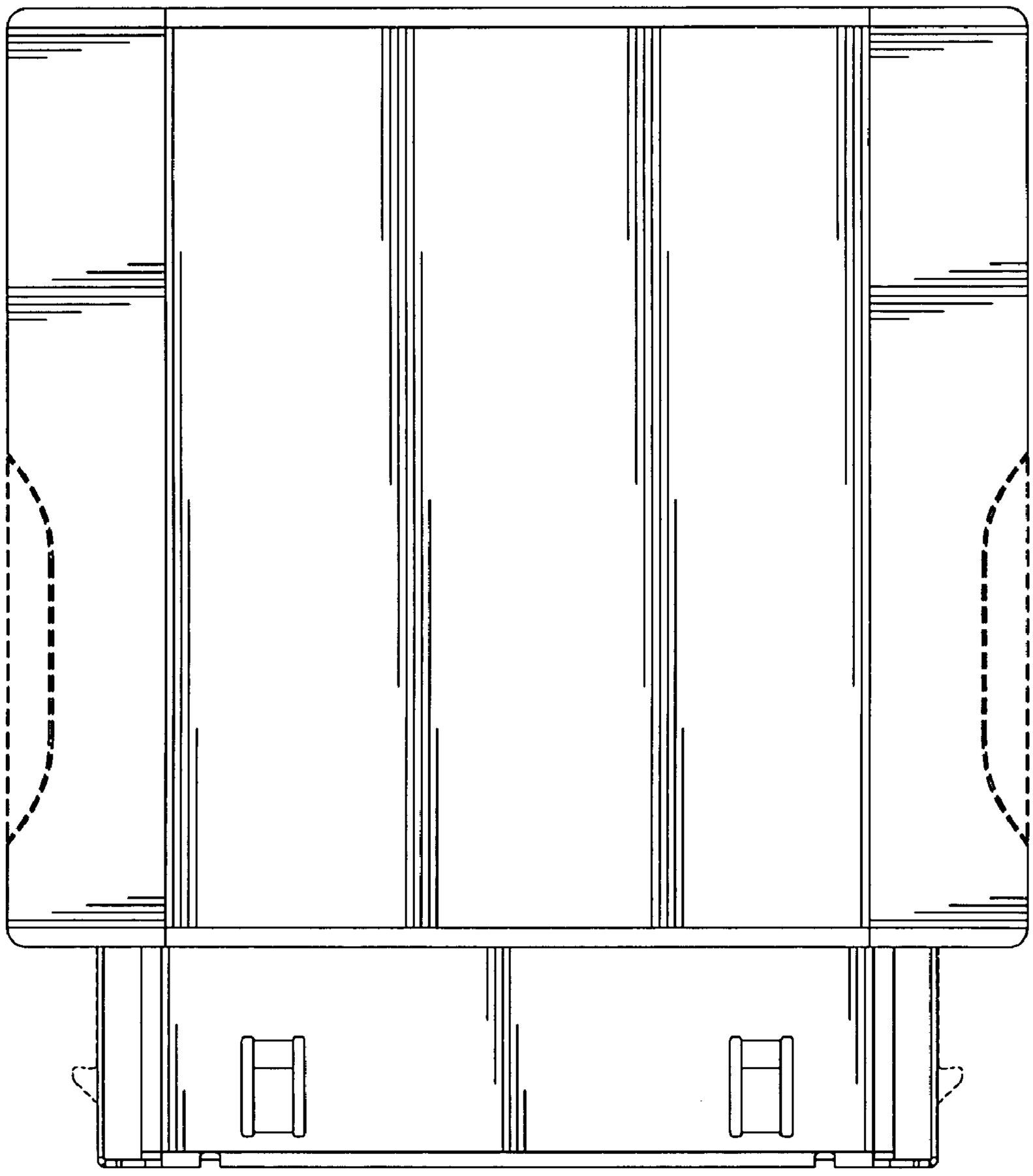

FIG. 7

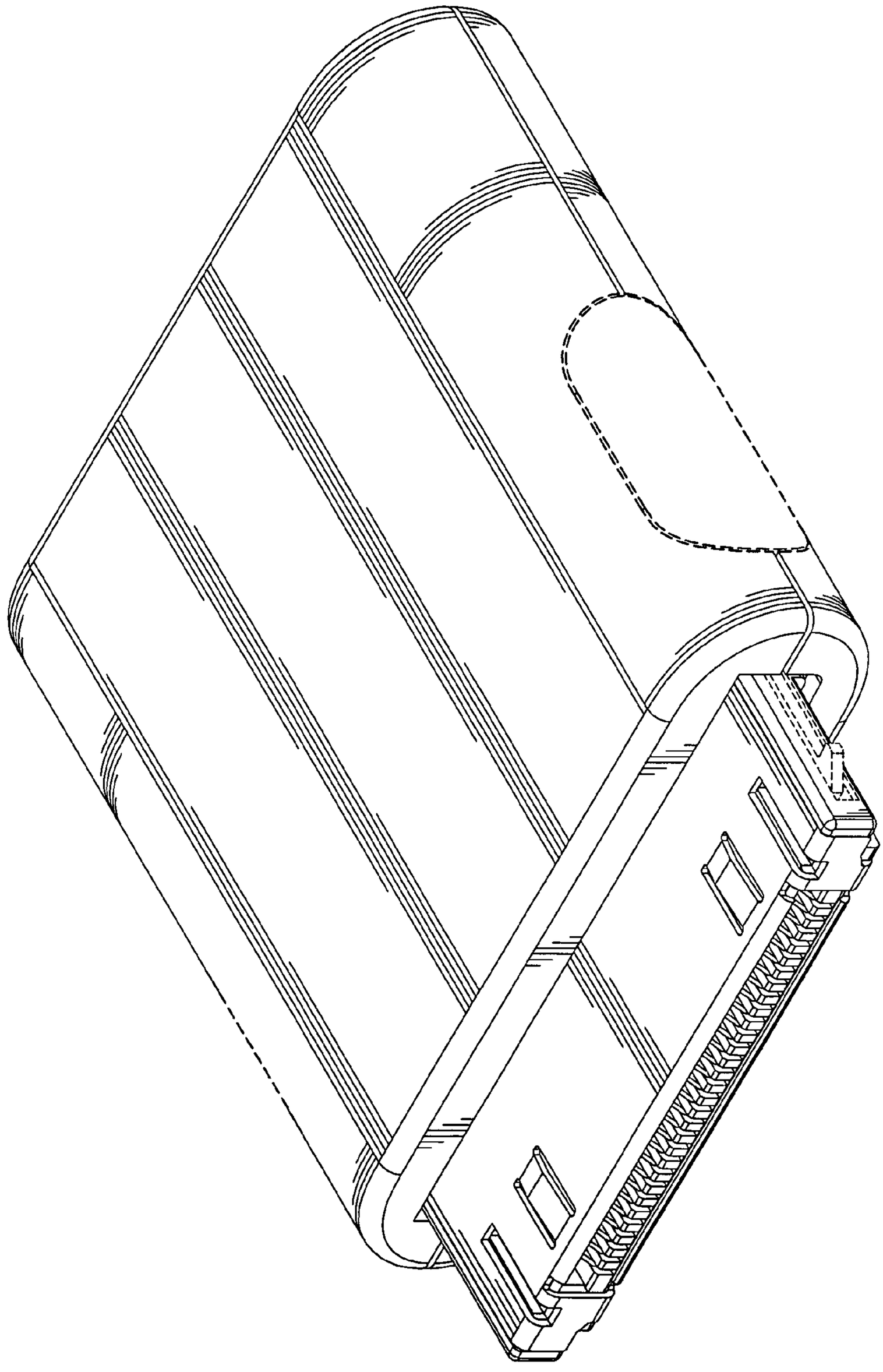

FIG. 8