US00D583444S

(12) United States Design Patent

Nagle et al.

(10) Patent No.: US D583,444 S
(45) Date of Patent: ** Dec. 23, 2008

(54) **PIPE COUPLING**

(75) Inventors: **William A. Nagle**, Laureldale, PA (US); **Scott D. Madara**, Nazareth, PA (US); **John W. Pierce**, Nazareth, PA (US); **Douglas R. Dole**, Whitehouse Station, NJ (US)

(73) Assignee: **Victaulic Company**, Easton, PA (US)

(**) Term: **14 Years**

(21) Appl. No.: **29/278,187**

(22) Filed: **Mar. 21, 2007**

(51) **LOC (8) Cl.** **23-01**
(52) **U.S. Cl.** **D23/262**
(58) **Field of Classification Search** D23/213, D23/249, 257, 259, 260–269; 239/428.5; 261/DIG. 22; D8/396; 285/1, 112, 179, 285/340, 367, 373, 404, 53, 915; 4/675–678; 403/291, 300; 411/5, 10; 137/801
See application file for complete search history.

(56) **References Cited**

U.S. PATENT DOCUMENTS

1,851,574	A		3/1932	Fiederlein	
D142,057	S	*	8/1945	Baxter	D23/265
D142,834	S	*	11/1945	Campbell	D23/265
D168,928	S	*	3/1953	English	D23/265
2,752,173	A	*	6/1956	Krooss	285/232
3,695,638	A		10/1972	Blakeley	
4,218,080	A		8/1980	Kendrick	
4,408,788	A	*	10/1983	Beukema	285/419
D287,532	S	*	12/1986	Jones et al.	D23/265
4,896,902	A	*	1/1990	Weston	285/93
4,966,395	A		10/1990	Hendrickson	
5,058,931	A		10/1991	Bowsher	
D334,050	S	*	3/1993	Foxlee	D23/263
D339,975	S	*	10/1993	Bird et al.	D8/354
5,911,446	A	*	6/1999	McLennan et al.	285/104
6,076,861	A	*	6/2000	Ikeda	285/112
6,626,466	B1		9/2003	Dole	
7,086,131	B2		8/2006	Gibb et al.	
7,090,259	B2	*	8/2006	Dole	285/367
D558,307	S	*	12/2007	Gibb et al.	D23/265
D560,764	S	*	1/2008	Gibb et al.	D23/265
D568,451	S	*	5/2008	Gibb et al.	D23/262
D570,458	S	*	6/2008	Gibb et al.	D23/262
2005/0242585	A1	*	11/2005	Dole et al.	285/367

OTHER PUBLICATIONS

Asian Sources Hardwares (Apr. 2006), p. 187.
U.S. Appl. No. 29/232,362; Inventor—John Gibb; filed Jun. 17, 2005.
U.S. Appl. No. 29/232,359; Inventor—John Gibb; filed Jun. 17, 2005.

* cited by examiner

Primary Examiner—Cathron C Brooks
Assistant Examiner—Michael A Pratt
(74) *Attorney, Agent, or Firm*—Ballard Spahr Andrews & Ingersoll, LLP

(57) **CLAIM**

The ornamental design for a pipe coupling, as shown and described.

DESCRIPTION

FIG. **1** is a perspective view of the pipe coupling showing our new design;

FIG. **2** is a front view of the design for the pipe coupling assembly shown in FIG. **1**, the rear view being identical;

FIG. **3** is a top view of the design for the pipe coupling assembly shown in FIG. **1**;

FIG. **4** is a bottom view of the design for the pipe coupling assembly shown in FIG. **1**; and,

FIG. **5** is a left side view of the design for the pipe coupling assembly shown in FIG. **1**, the right side view being identical.

1 Claim, 2 Drawing Sheets

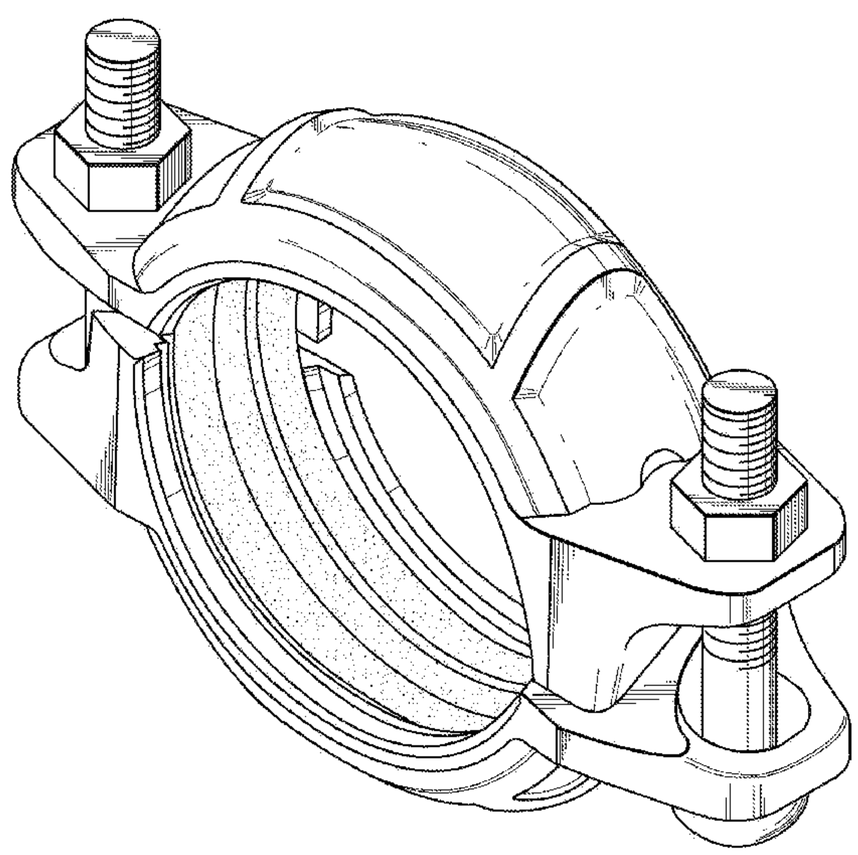

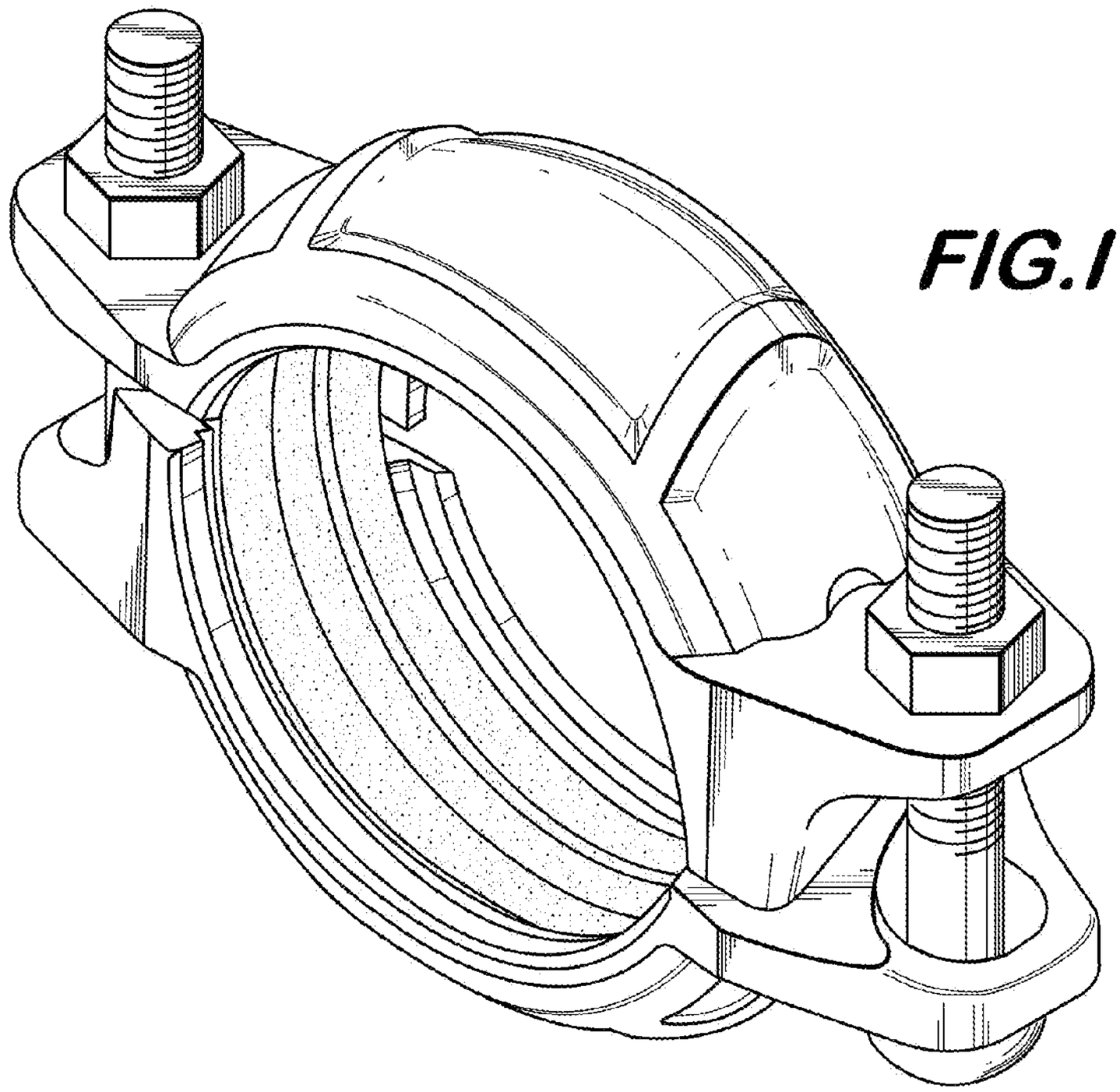

FIG.1

FIG.2

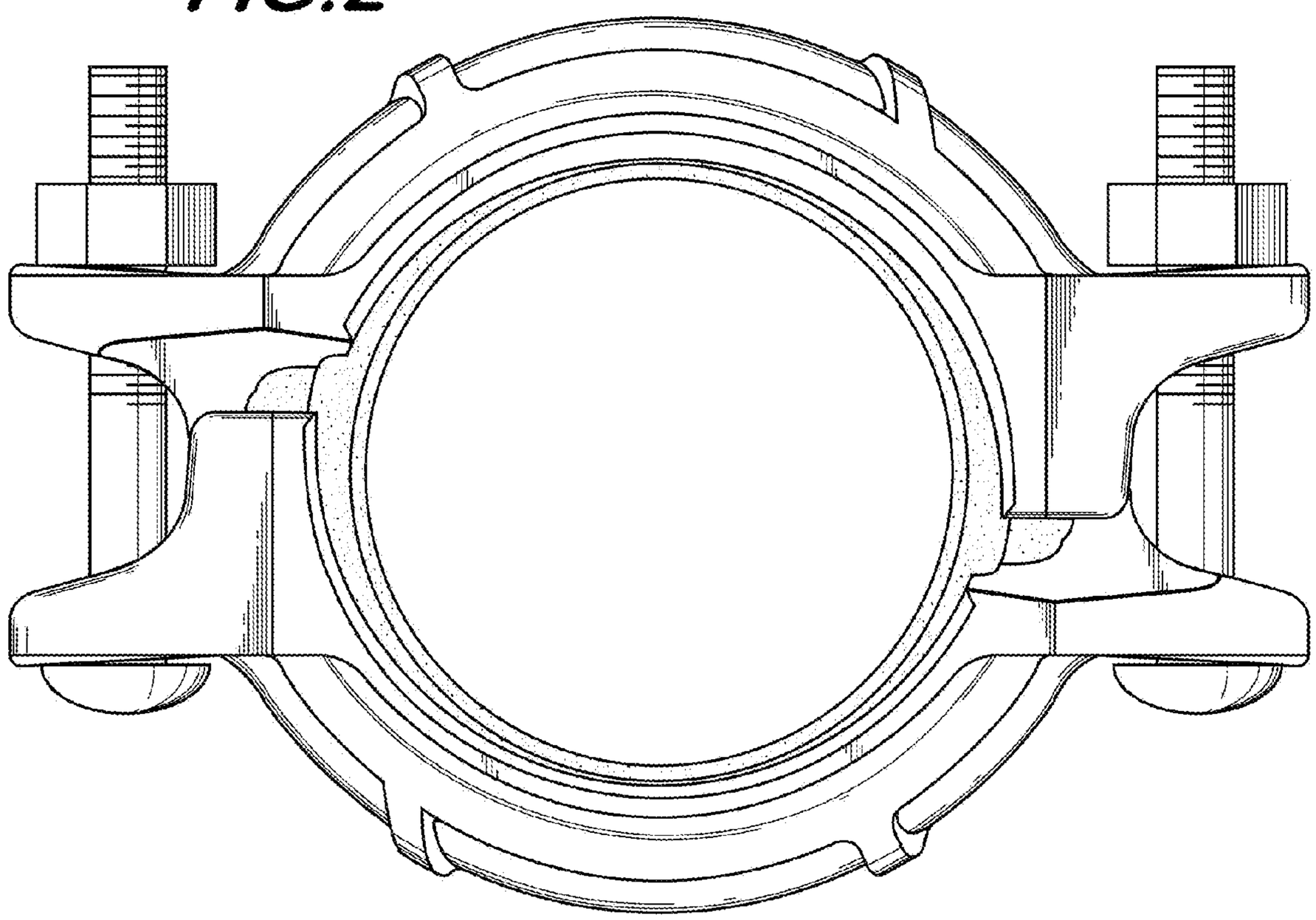

FIG.3

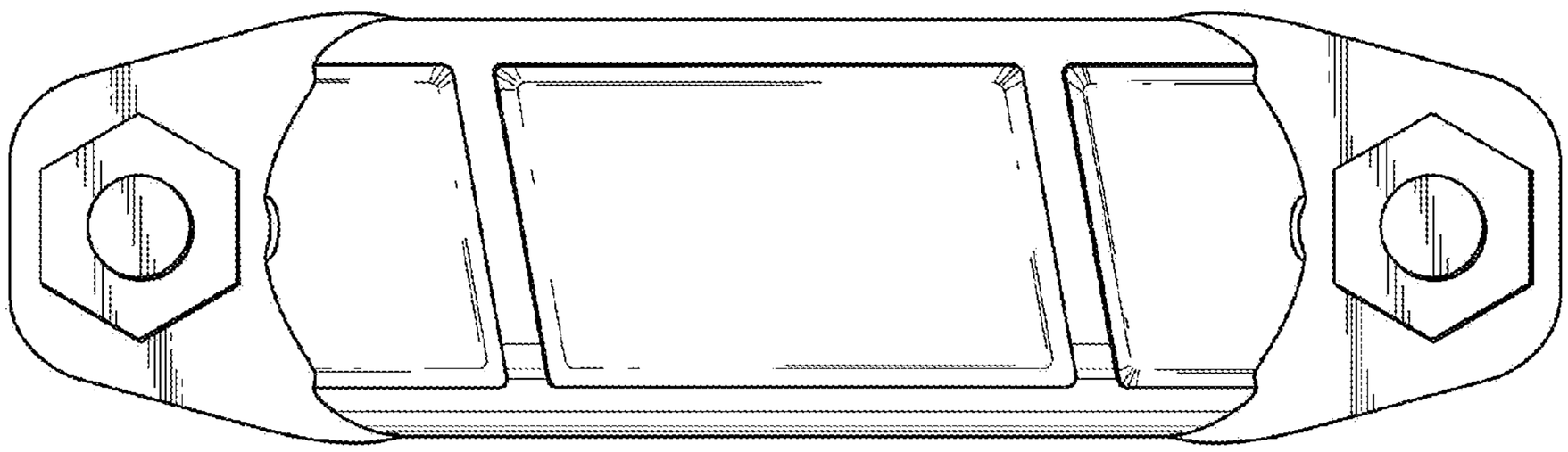

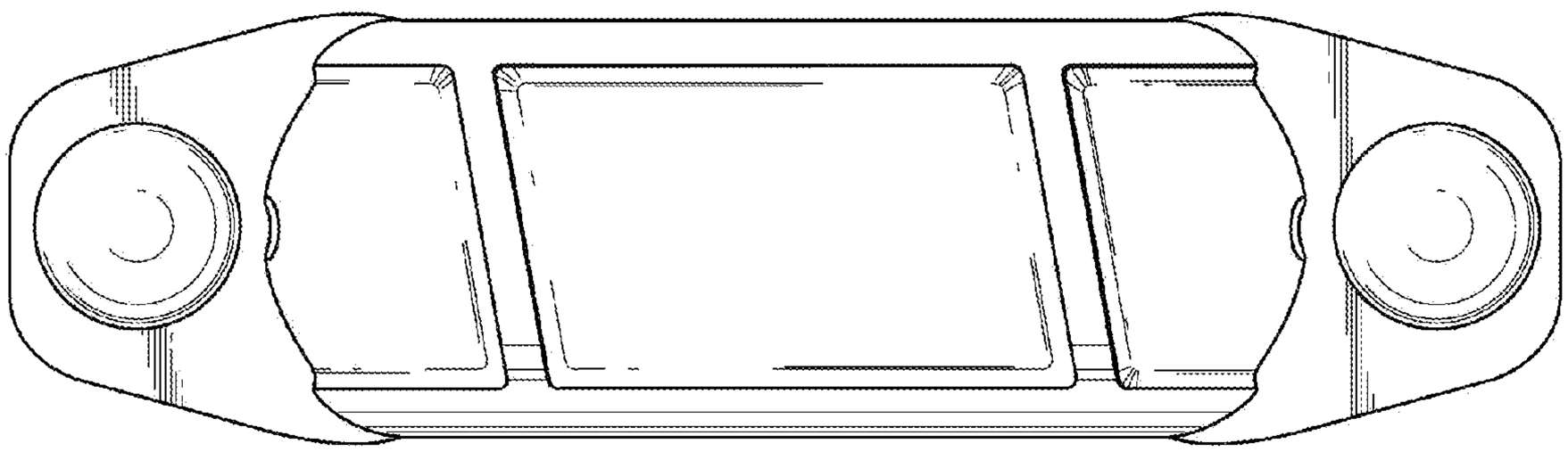

FIG.4

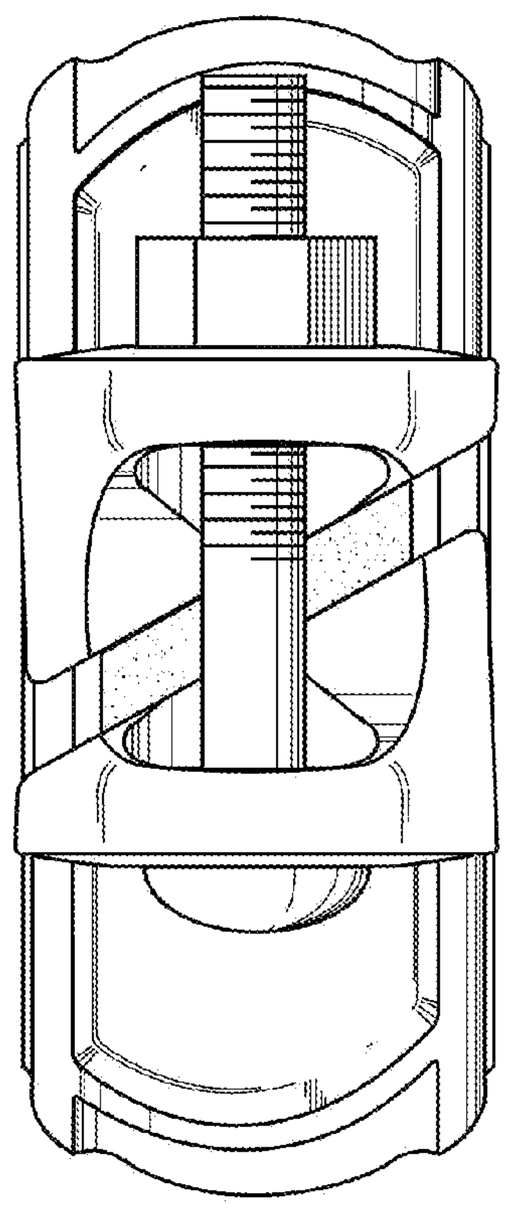

FIG.5