US00D582846S

(12) United States Design Patent
Lett

(10) Patent No.: US D582,846 S
(45) Date of Patent: ** Dec. 16, 2008

(54) **POWER CONVERTER**

(76) Inventor: **Sean Lett**, 23603 E. Mississippi Cir., Aurora, CO (US) 80018

(**) Term: **14 Years**

(21) Appl. No.: **29/308,593**

(22) Filed: **Jun. 26, 2008**

(51) **LOC (8) Cl.** **13-02**
(52) **U.S. Cl.** **D13/110**
(58) **Field of Classification Search** D13/110, D13/101, 123, 133, 162, 184, 199; D14/357, D14/358; 307/151; 361/600, 601, 707, 715, 361/730; 363/15, 34, 35
See application file for complete search history.

(56) **References Cited**

U.S. PATENT DOCUMENTS

5,019,767 A * 5/1991 Shirai et al. 320/112
5,502,618 A * 3/1996 Chiou 361/695
D375,483 S * 11/1996 Tashiro D13/110
D407,066 S * 3/1999 Renk D13/110
D425,017 S * 5/2000 Leung D13/110
D485,805 S * 1/2004 Ho D13/110
D496,906 S * 10/2004 Vinciarelli et al. D13/110

* cited by examiner

Primary Examiner—Prabhakar Deshmukh
Assistant Examiner—Derrick Holland
(74) *Attorney, Agent, or Firm*—Richard L. Mikesell

(57) **CLAIM**

The ornamental design for a power converter, as shown and described.

DESCRIPTION

FIG. **1** is a top right perspective view of a power converter showing my new design.

Those portions not visible are plain and unadorned.

1 Claim, 1 Drawing Sheet

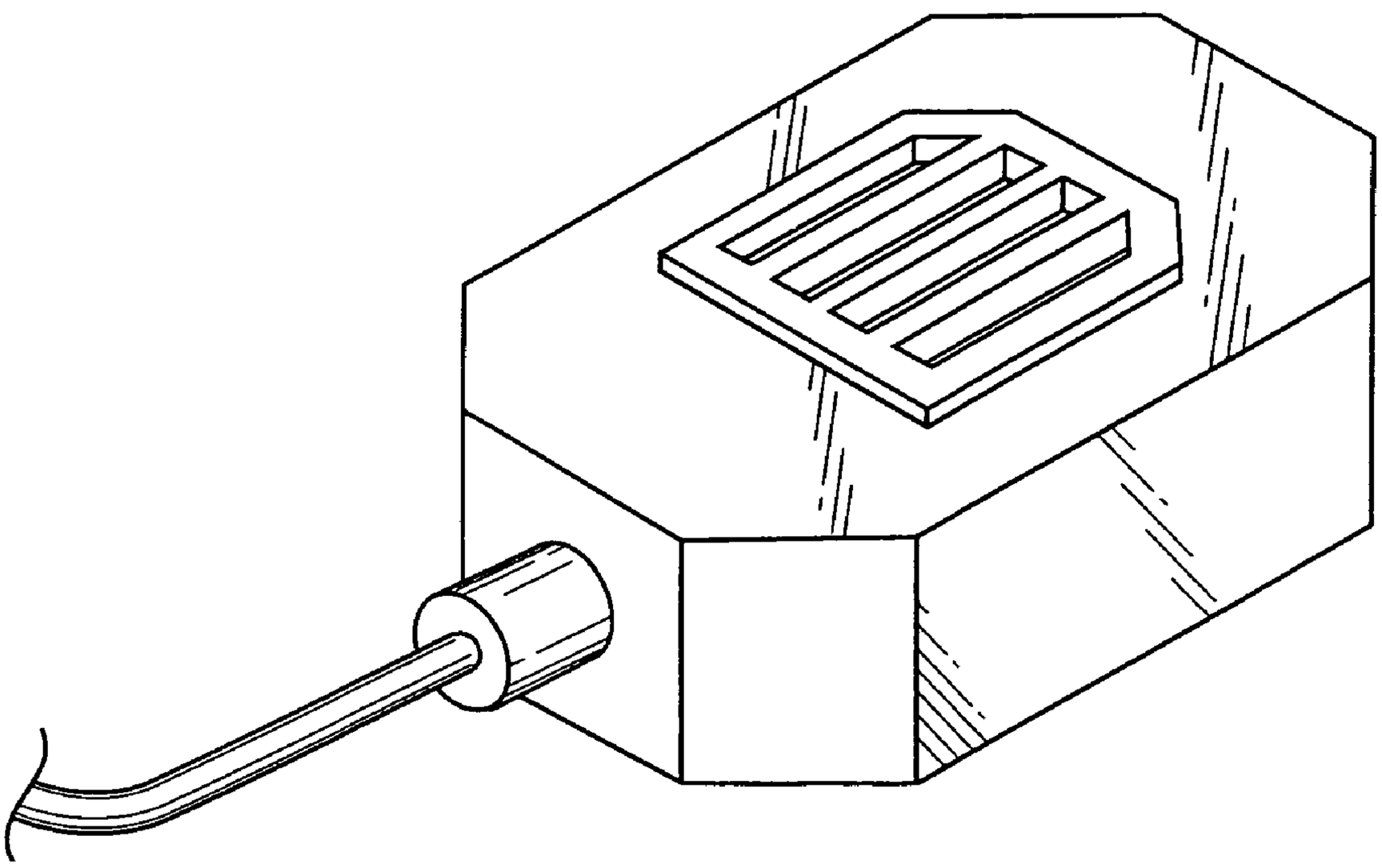

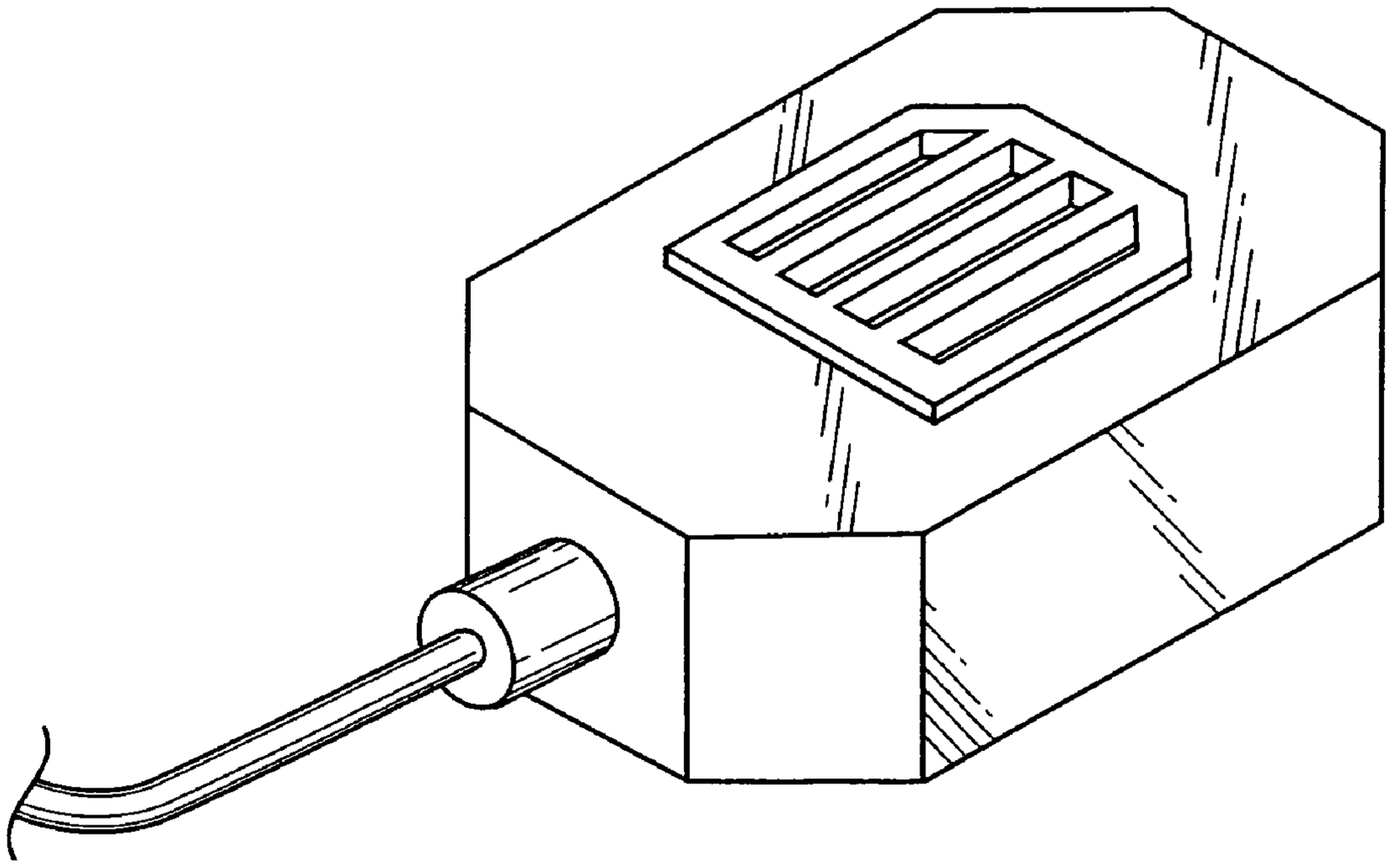

Fig. 1