US00D582098S

(12) United States Design Patent

Jansheski et al.

(10) Patent No.: US D582,098 S
(45) Date of Patent: ** Dec. 2, 2008

(54) **COMBINATION DENTAL FLOSSER AND PICK**

(75) Inventors: **John M. Jansheski**, Maryville, TN (US); **Lex Shankle**, Maryville, TN (US); **Eric Mowell**, Maryville, TN (US); **Devin Moore**, Decatur, GA (US); **Erick E. Rios**, Decatur, GA (US); **Collin Farill**, Decatur, GA (US)

(73) Assignee: **Dentek Oral Care, Inc.**, Maryville, TN (US)

(**) Term: **14 Years**

(21) Appl. No.: **29/296,178**

(22) Filed: **Oct. 16, 2007**

(51) **LOC (8) Cl.** **28-03**
(52) **U.S. Cl.** **D28/66**
(58) **Field of Classification Search** D28/31, D28/56, 65–68, 73; D24/152, 154; 433/141, 433/146–147; 132/322–329
See application file for complete search history.

(56) **References Cited**

U.S. PATENT DOCUMENTS

1,512,633	A	*	10/1924	Peckham	132/325
1,570,357	A		1/1926	Lawrenz	
2,180,522	A		11/1939	Henne	
2,664,093	A	*	12/1953	Carpenter	132/323
3,783,883	A		1/1974	Alexander	
D237,499	S		11/1975	Maloney et al.	
D240,831	S		8/1976	Wang	
D241,647	S	*	9/1976	Ruggieri	D24/154
4,002,183	A		1/1977	Restall	
4,280,518	A		7/1981	Gambaro	
4,671,307	A		6/1987	Curbow et al.	
D299,977	S		2/1989	Rinaudo	
D301,071	S		5/1989	Franchi	
D301,072	S		5/1989	Ross, Jr.	
4,832,062	A		5/1989	Grollimund et al.	
D309,803	S		8/1990	Potter	
D316,617	S		4/1991	Cheung	
D316,782	S	*	5/1991	Torbenson	D4/108
D323,723	S		2/1992	Chung	
5,123,432	A		6/1992	Wyss	
5,433,227	A		7/1995	Chen	
5,678,579	A		10/1997	Meyer et al.	
5,738,125	A		4/1998	Lin	
5,829,458	A		11/1998	Chodorow	
D410,115	S		5/1999	Chodorow	
6,055,993	A		5/2000	Meyer et al.	
6,102,051	A		8/2000	Neves	
6,227,210	B1		5/2001	Wyss	
6,257,252	B1		7/2001	Hall	
D531,757	S		11/2006	Jansheski et al.	
D531,758	S		11/2006	Jansheski et al.	
D532,160	S		11/2006	Jansheski et al.	
D532,934	S		11/2006	Crossman	

* cited by examiner

Primary Examiner—Janice E. Seeger
Assistant Examiner—Zenia I Bennett
(74) *Attorney, Agent, or Firm*—Luedeka, Neely & Graham, PC

(57) **CLAIM**

The ornamental design for a combination dental flosser and pick, as shown and described.

DESCRIPTION

FIG. **1** is a front perspective view of the flossing pick device of our new design;

FIG. **2** is a left side view of the flossing pick device of our new design, the right side view being identical thereto;

FIG. **3** is a bottom view of the flossing pick device of our new design;

FIG. **4** is a top view of the flossing device of our new design;

FIG. **5** is a left end view of the flossing pick device of our new design; and,

FIG. **6** is a right end view of the flossing pick device of our new design.

1 Claim, 3 Drawing Sheets

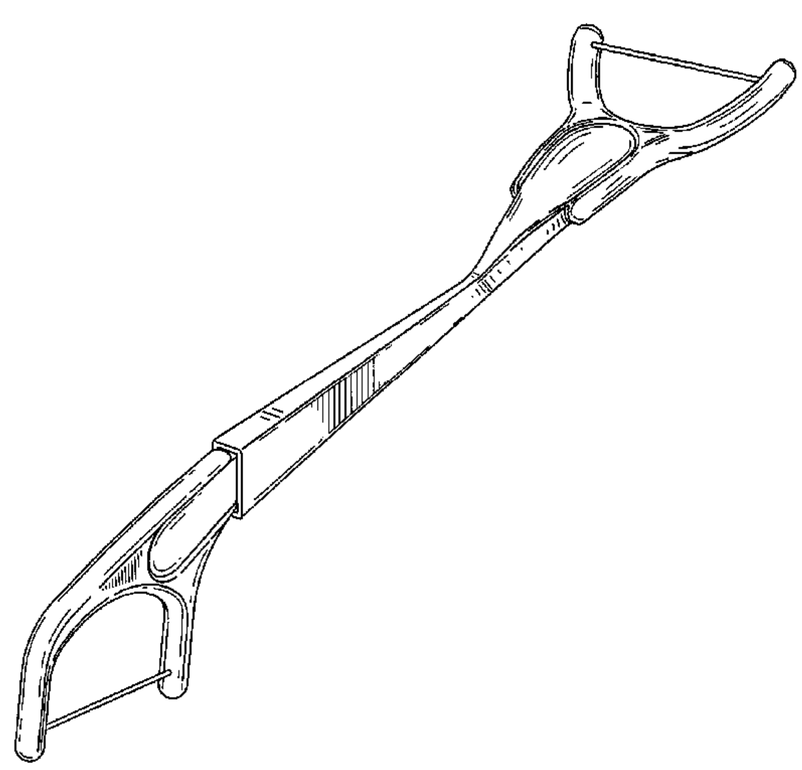

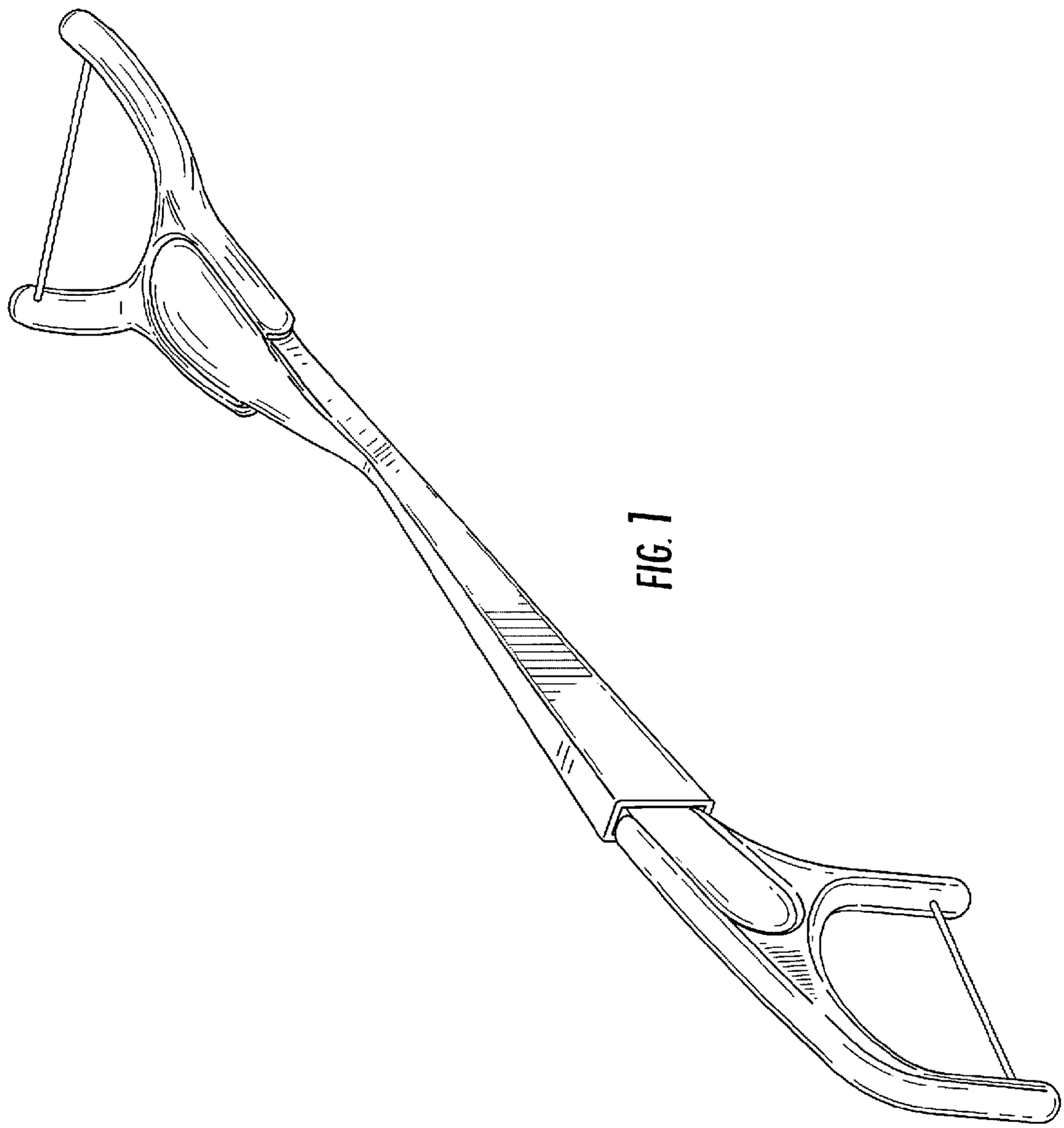

FIG. 1

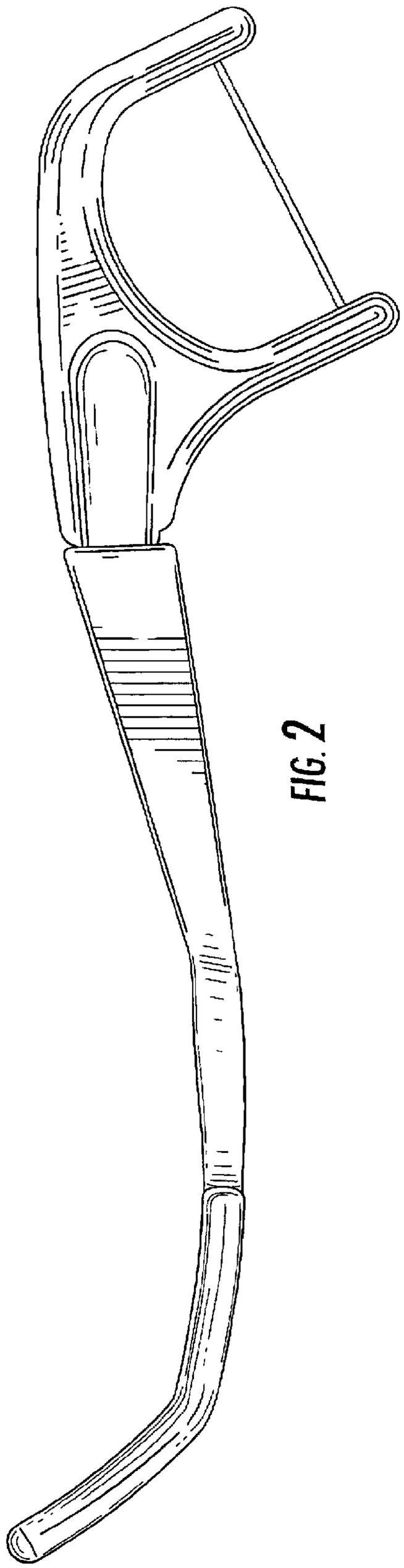

FIG. 2

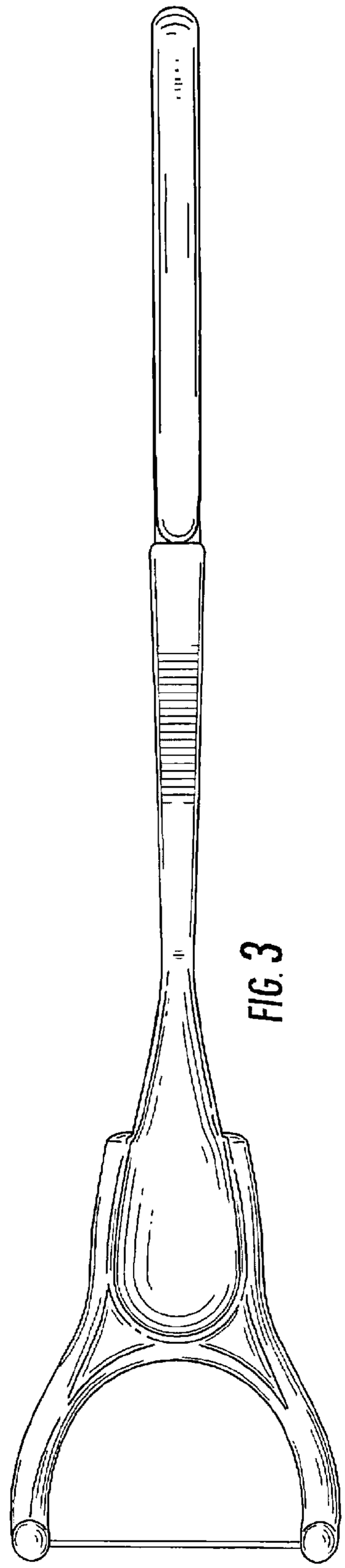

FIG. 3

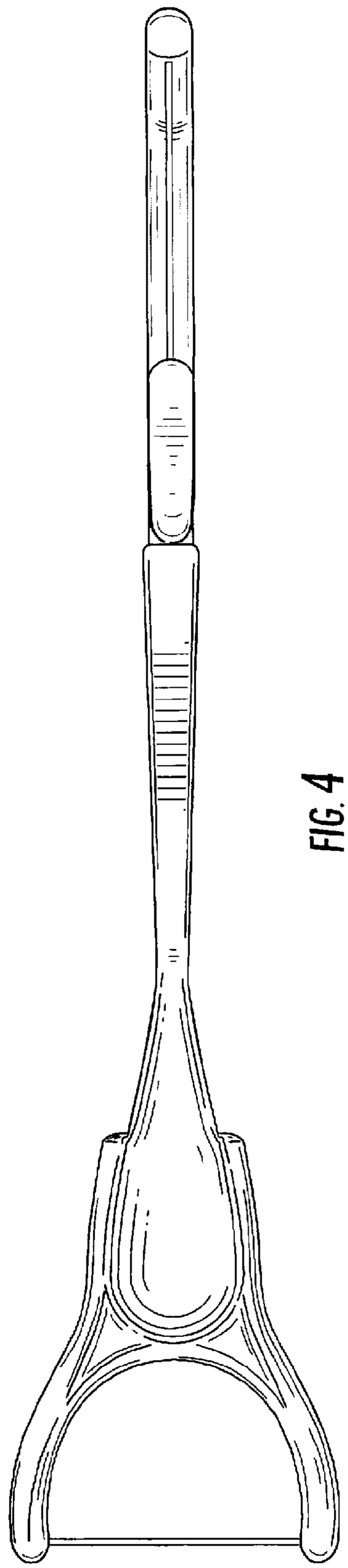

FIG. 4

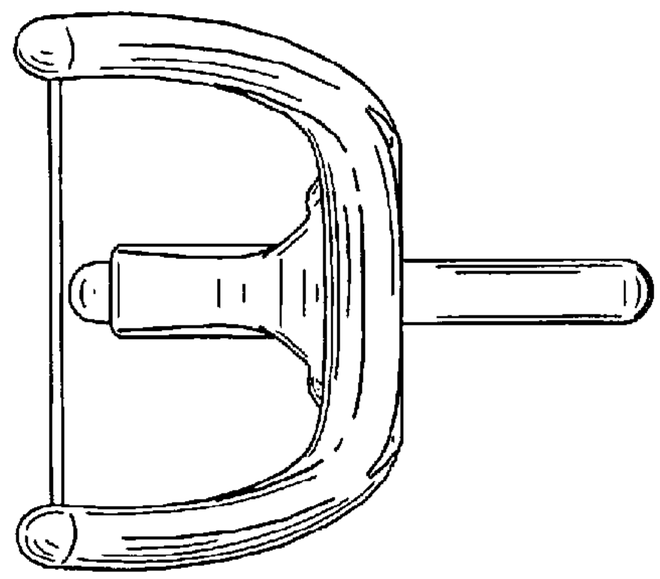

FIG. 6

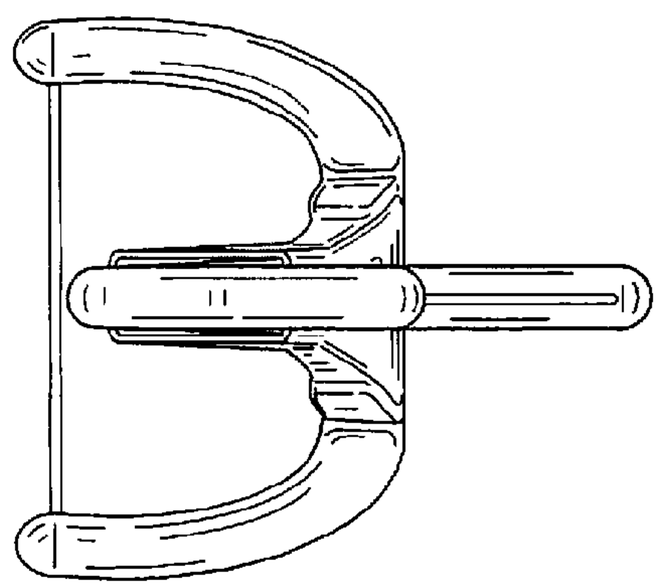

FIG. 5