US00D581064S

(12) United States Design Patent

Kawagoe et al.

(10) Patent No.: US D581,064 S
(45) Date of Patent: ** Nov. 18, 2008

(54) **LAMP FILAMENT**

(75) Inventors: **Shinya Kawagoe**, Kadoma (JP); **Naotaka Hashimoto**, Kadoma (JP); **Toshiyasu Kojima**, Kadoma (JP); **Taku Ikeda**, Kadoma (JP)

(73) Assignee: **Panasonic Corporation**, Osaka (JP)

(**) Term: **14 Years**

(21) Appl. No.: **29/289,021**

(22) Filed: **Jun. 29, 2007**

(30) **Foreign Application Priority Data**

Mar. 2, 2007 (JP) 2007-005385
Mar. 2, 2007 (JP) 2007-005386
Mar. 2, 2007 (JP) 2007-005387

(51) **LOC (8) Cl.** **26-04**
(52) **U.S. Cl.** **D26/2**
(58) **Field of Classification Search** D26/1–4, D26/113; 313/9, 37–38, 578–580, 264, 271–279, 313/316, 333; 315/46, 49, 64, 66–69
See application file for complete search history.

(56) **References Cited**

U.S. PATENT DOCUMENTS

D15,685	S	*	1/1885	Hurdle	D26/2
D15,839	S	*	2/1885	Slattery	D26/2
D32,396	S	*	3/1900	Husselman	D26/2
2,100,879	A	*	11/1937	Smith	313/580
2,880,352	A	*	3/1959	Hart	313/279
3,416,024	A	*	12/1968	Young	313/273
3,777,207	A	*	12/1973	Notelteirs et al.	313/578
3,875,443	A	*	4/1975	Nakamura	313/274
4,297,611	A	*	10/1981	Cortorillo	313/579
4,568,854	A	*	2/1986	Westlund et al.	313/579
5,252,888	A	*	10/1993	Topel et al.	313/318.01
D392,057	S	*	3/1998	Chen	D26/2
D395,714	S	*	6/1998	Murata	D26/2
D395,716	S		6/1998	Murata	
D410,554	S	*	6/1999	Guyton	D26/2
D450,860	S	*	11/2001	Moriyama et al.	D26/2
D512,788	S	*	12/2005	Komiya et al.	D26/2
D520,150	S		5/2006	Komiya et al.	

FOREIGN PATENT DOCUMENTS

JP	D1067839	4/2000
JP	D1119354	8/2001
JP	D1129862	12/2001
JP	D1225823	12/2004

* cited by examiner

Primary Examiner—Charles A. Rademaker
Assistant Examiner—Dana L Sipos
(74) *Attorney, Agent, or Firm*—Brinks Hofer Gilson & Lione

(57) **CLAIM**

We claim the ornamental design for a lamp filament, as shown and described.

DESCRIPTION

FIG. **1** is a top, front, right side perspective view of a lamp filament showing our new design;

FIG. **2** is a front elevation view thereof;

FIG. **3** is a rear elevation view thereof;

FIG. **4** is a left side elevation view thereof;

FIG. **5** is a right side elevation view thereof;

FIG. **6** is a top plan view thereof; and,

FIG. **7** is a bottom plan view thereof.

The bottom portion of the lamp filament shown in broken lines illustrates a portion of the design that forms no part of the claim.

1 Claim, 7 Drawing Sheets

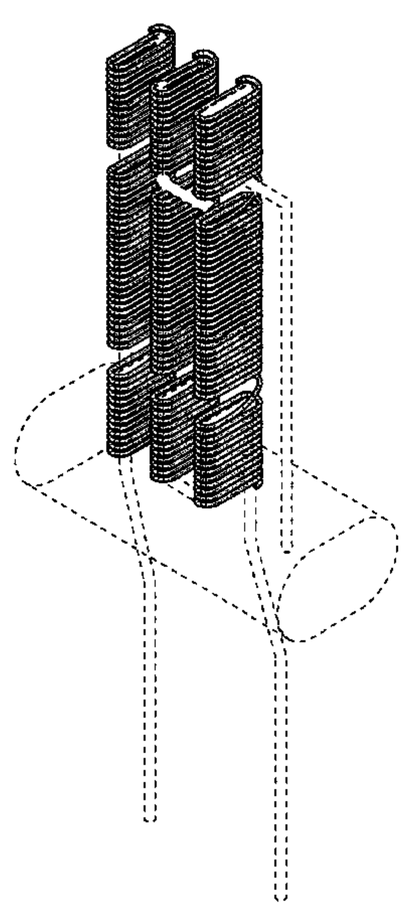

FIG. 1

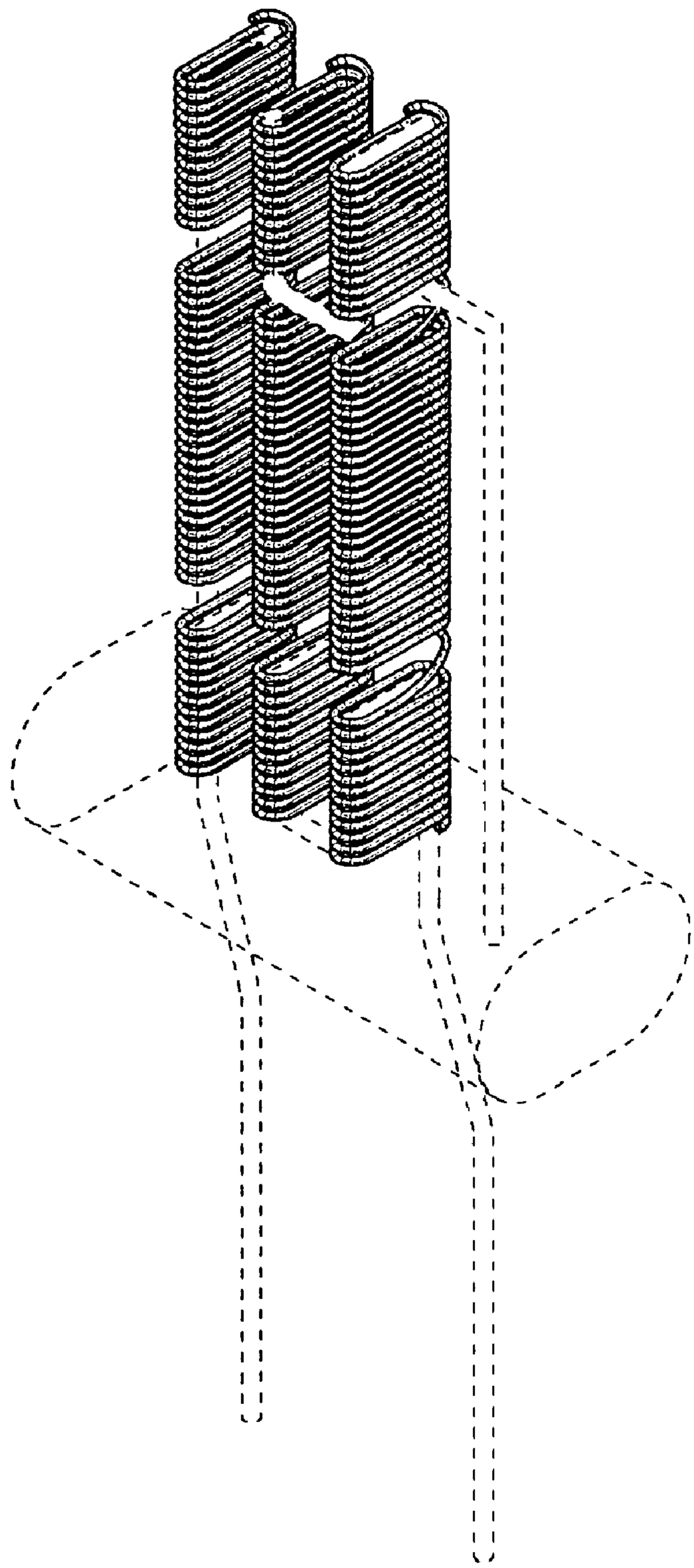

FIG. 2

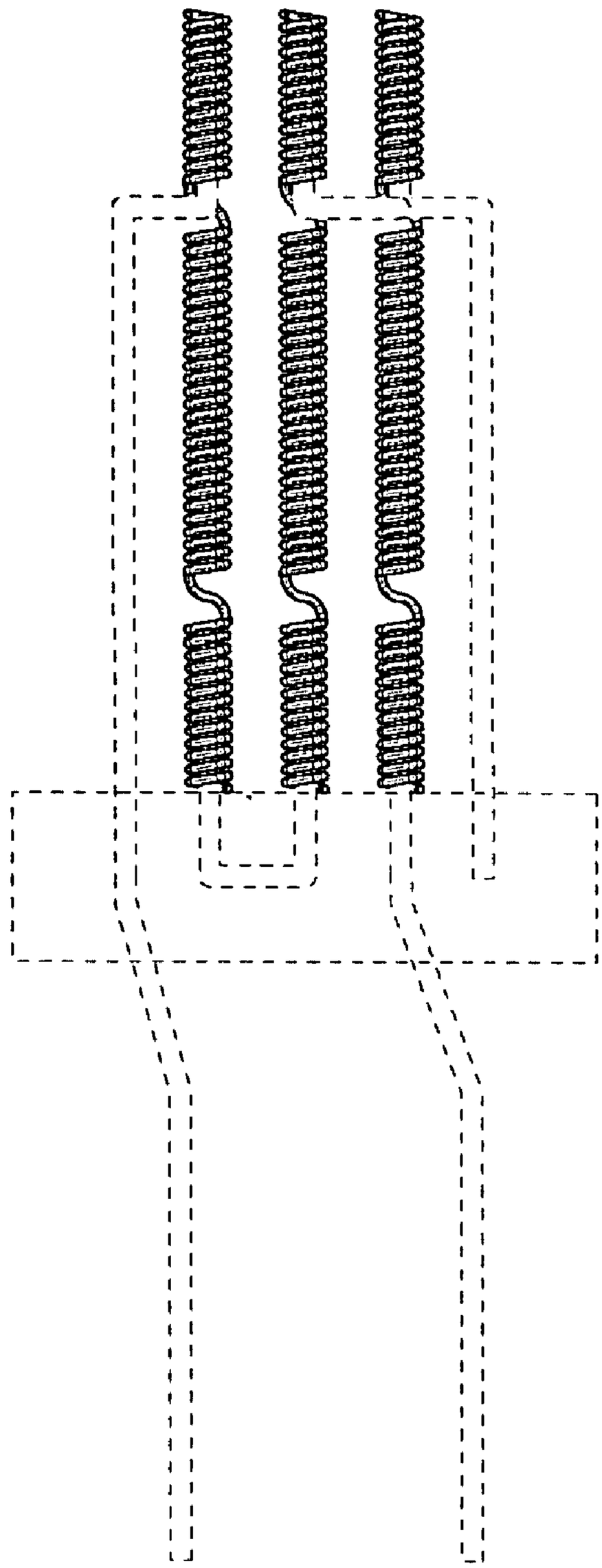

FIG.3

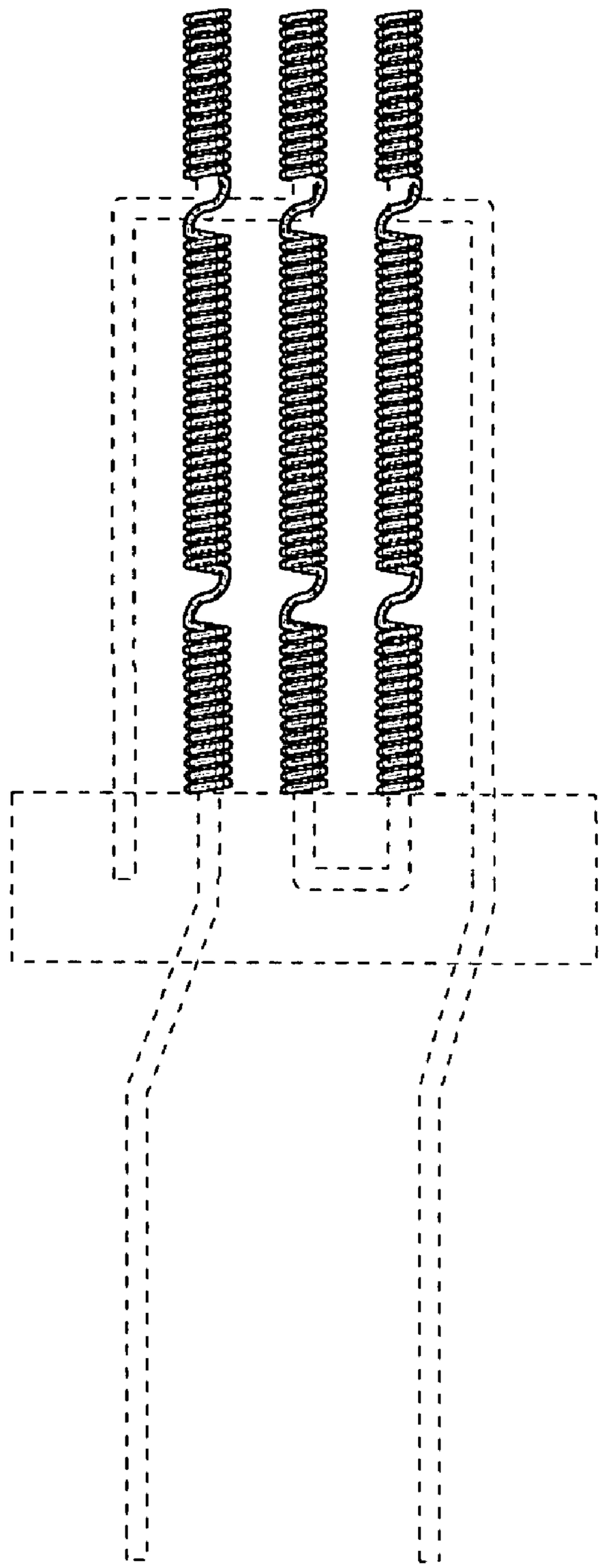

FIG.4

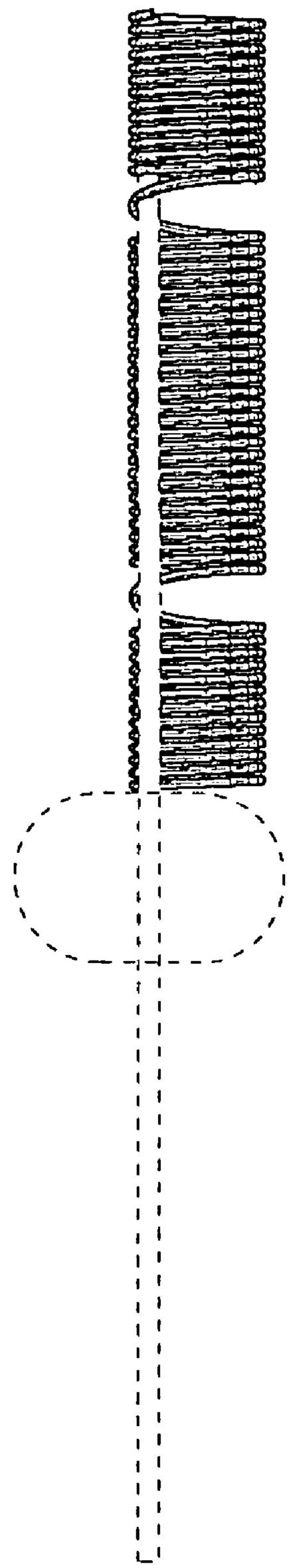

FIG.5

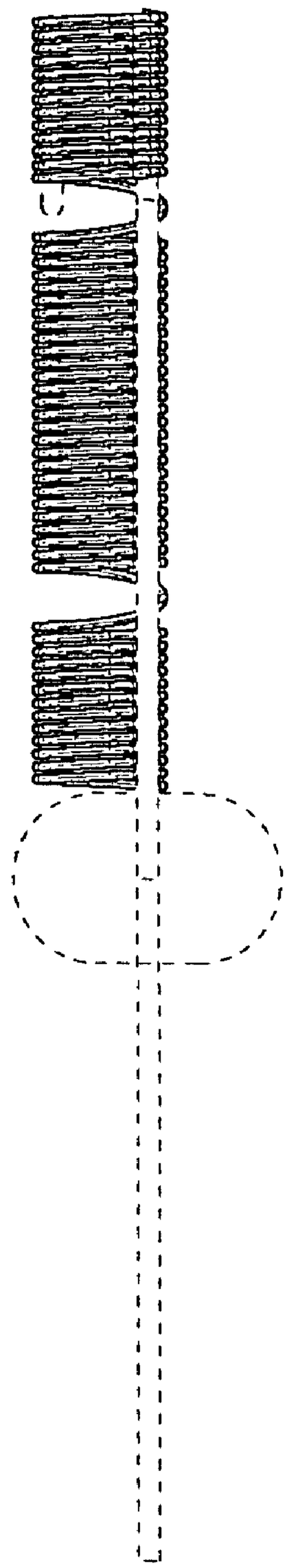

FIG.6

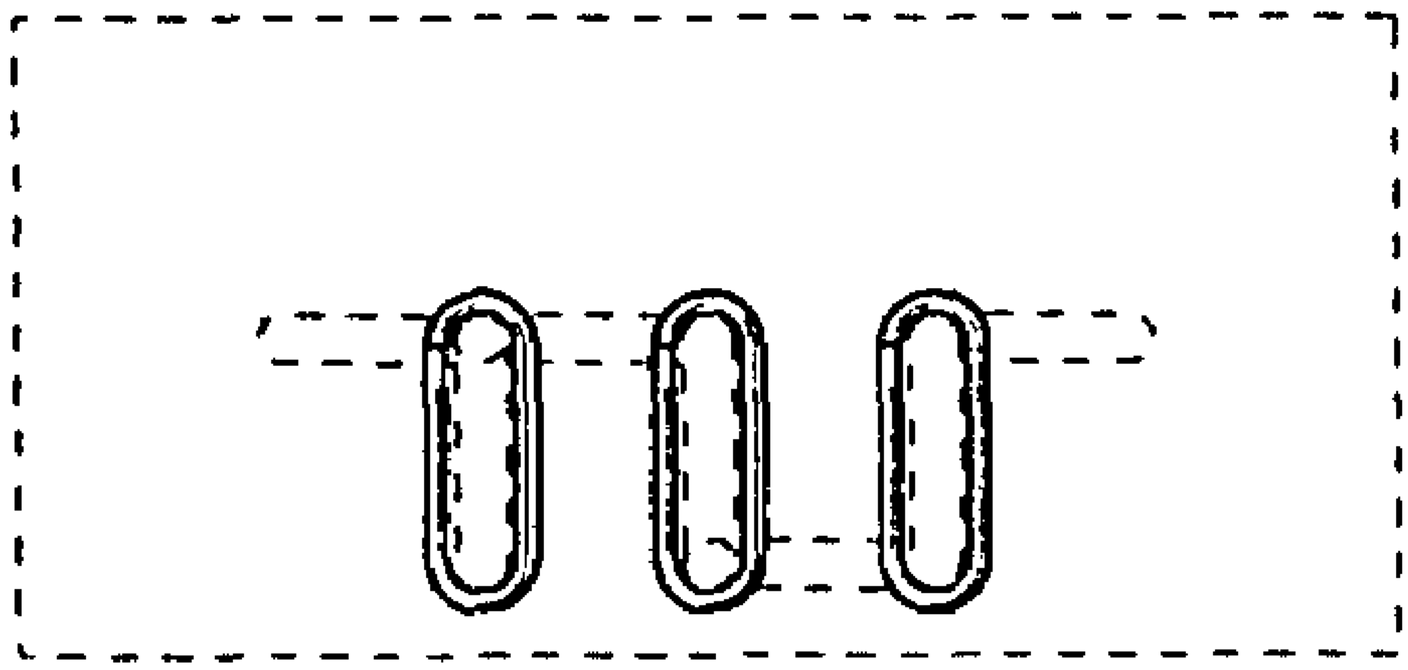
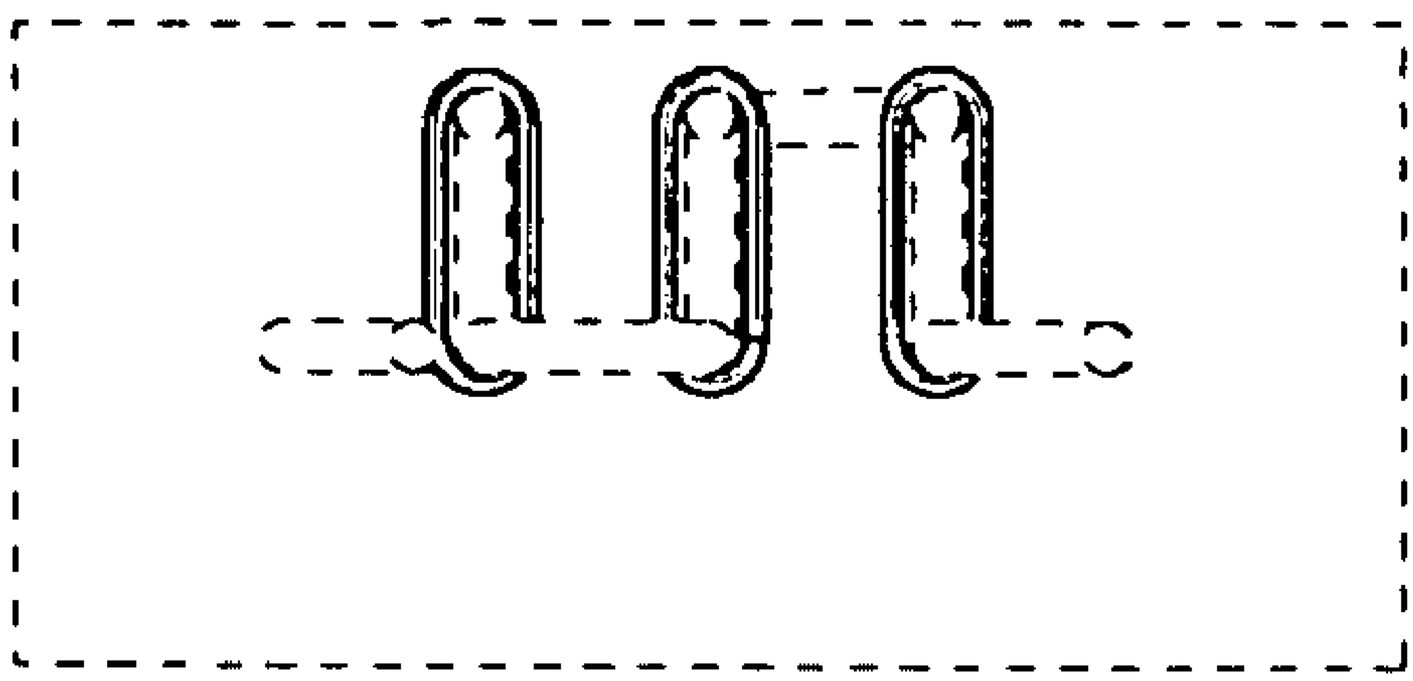
FIG. 7