US00D578884S

# (12) United States Design Patent
**Rozanski**

(10) **Patent No.: US D578,884 S**
(45) **Date of Patent: ** Oct. 21, 2008**

(54) **DISPLAY PACKAGE**

(75) Inventor: **Alan L. Rozanski**, Franklin, WI (US)

(73) Assignee: **Master Lock Company LLC**, Oak Creek, WI (US)

(**) Term: **14 Years**

(21) Appl. No.: **29/299,547**

(22) Filed: **Dec. 28, 2007**

(51) **LOC (8) Cl.** ..... **09-03**
(52) **U.S. Cl.** ..... **D9/432**
(58) **Field of Classification Search** ..... D9/430–433, D9/414–418, 420–429, 560, 737, 756, 631, D9/636, 640, 642; D3/273, 302; 206/421, 206/454, 457, 775–778, 784, 822; 220/500, 220/523–529, 552, 555; 229/100, 103.3, 229/104–106, 108, 108.1, 109, 110, 111, 229/112, 117.09, 117.12, 117.15, 120, 125.015, 229/160.1, 162.1, 182.1, 215, 247, 406, 407, 229/902, 920, 922, 930, 942; D2/731, 748; D7/612, 829
See application file for complete search history.

(56) **References Cited**

U.S. PATENT DOCUMENTS


| | | | | | |
|---|---|---|---|---|---|
| 1,329,531 | A | * | 2/1920 | Kitt | 229/120 |
| 1,707,788 | A | * | 4/1929 | Felten | 229/104 |
| 1,710,543 | A | * | 4/1929 | Leo | 206/418 |
| 2,293,187 | A | * | 8/1942 | Becker | 206/389 |
| 2,402,548 | A | * | 6/1946 | Reynolds | 264/324 |
| 2,416,725 | A | * | 3/1947 | Williamson | 229/121 |
| 2,442,161 | A | * | 5/1948 | Bergstein | 53/411 |
| 2,758,775 | A | * | 8/1956 | Moore | 229/122.23 |
| 3,191,791 | A | * | 6/1965 | Jackson | 217/25.5 |
| 3,251,460 | A | * | 5/1966 | Edmonds | 206/523 |
| 3,406,814 | A | * | 10/1968 | Gulliver | 206/777 |
| 3,432,380 | A | * | 3/1969 | Weber | 428/159 |
| 3,642,125 | A | * | 2/1972 | Johnson | 206/225 |
| RE29,415 | E | * | 9/1977 | Ricobene et al. | 206/550 |
| D252,559 | S | * | 8/1979 | Bliss | D9/433 |
| 4,258,961 | A | * | 3/1981 | Ackeret | 312/111 |

(Continued)


*Primary Examiner*—Philip Hyder
*Assistant Examiner*—Karen Acker
(74) *Attorney, Agent, or Firm*—Calfee, Halter & Griswold LLP

(57) **CLAIM**

The ornamental design for a display package, as shown and described.

**DESCRIPTION**

FIG. **1** is a front-left perspective view of the new, original, and ornamental design for a display package, showing a product in phantom lines retained on the display package;

FIG. **2** is a front-right perspective view of the display package of FIG. **1**, showing a product in phantom lines retained on the display package;

FIG. **3** is a front-left perspective view of the display package of FIG. **1**;

FIG. **4** is a front-right perspective view of the display package of FIG. **1**;

FIG. **5** is a left side view of the display package of FIG. **1**;

FIG. **6** is a top view of the display package of FIG. **1**;

FIG. **7** is a front view of the display package of FIG. **1**;

FIG. **8** is a right side view of the display package of FIG. **1**;

FIG. **9** is a bottom view of the display package of FIG. **1**; and,

FIG. **10** is a rear view of the display package of FIG. **1**.

The portions of the FIGS. **3**, **4**, **7** and **10** shown in phantom lines form no part of the claimed design. The phantom lines in FIGS. **1** and **2** illustrate environmental structure that forms no part of the claimed design.

**1 Claim, 3 Drawing Sheets**

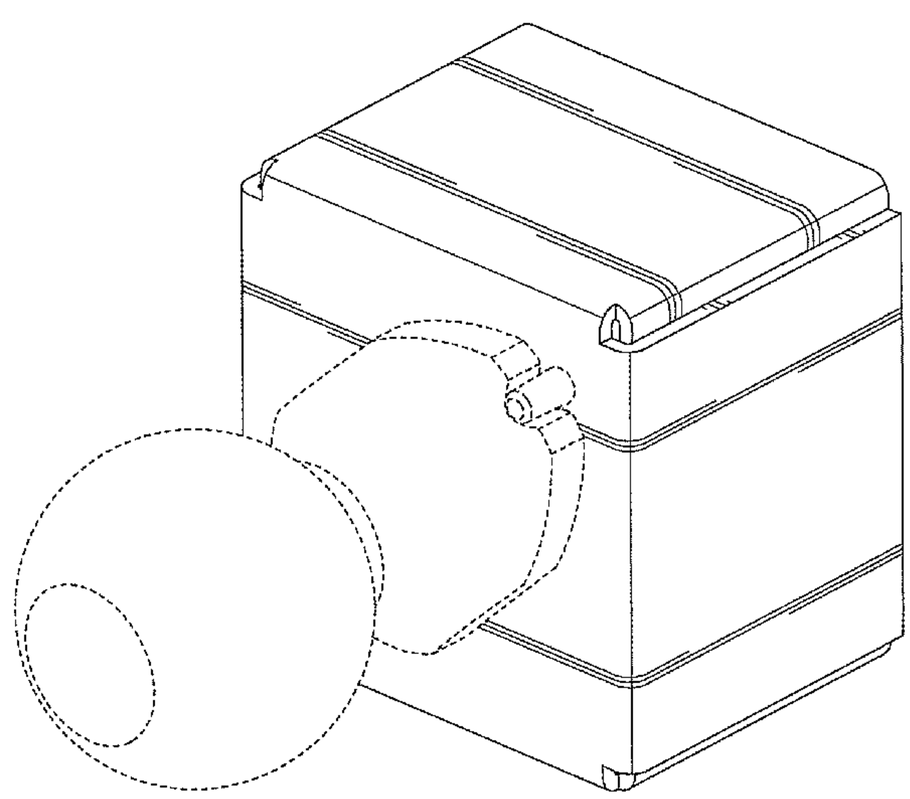

U.S. PATENT DOCUMENTS

D294,125 S * 2/1988 Hesser et al. ..... D9/420
D307,719 S * 5/1990 Band ..... D9/432
D308,636 S * 6/1990 Dinand ..... D9/424
5,462,220 A * 10/1995 Bacchetti et al. ..... 229/112
D369,100 S * 4/1996 Johnson ..... D9/640
5,588,531 A * 12/1996 Yoshida et al. ..... 206/454
D377,901 S * 2/1997 Payne et al. ..... D9/456
6,182,851 B1 * 2/2001 Donde ..... 220/582
6,227,442 B1 * 5/2001 Evans, Jr. ..... 229/122.31
D464,513 S * 10/2002 Ong ..... D6/518
6,966,450 B2 * 11/2005 Askew ..... 220/529
D532,686 S * 11/2006 Wijerama ..... D9/418
7,172,108 B2 * 2/2007 Ingalls ..... 229/117.33
D551,969 S * 10/2007 Aurilio et al. ..... D9/432
2004/0094437 A1 * 5/2004 Dailey, III ..... 206/205
2007/0251858 A1 * 11/2007 Martinez ..... 206/703

* cited by examiner

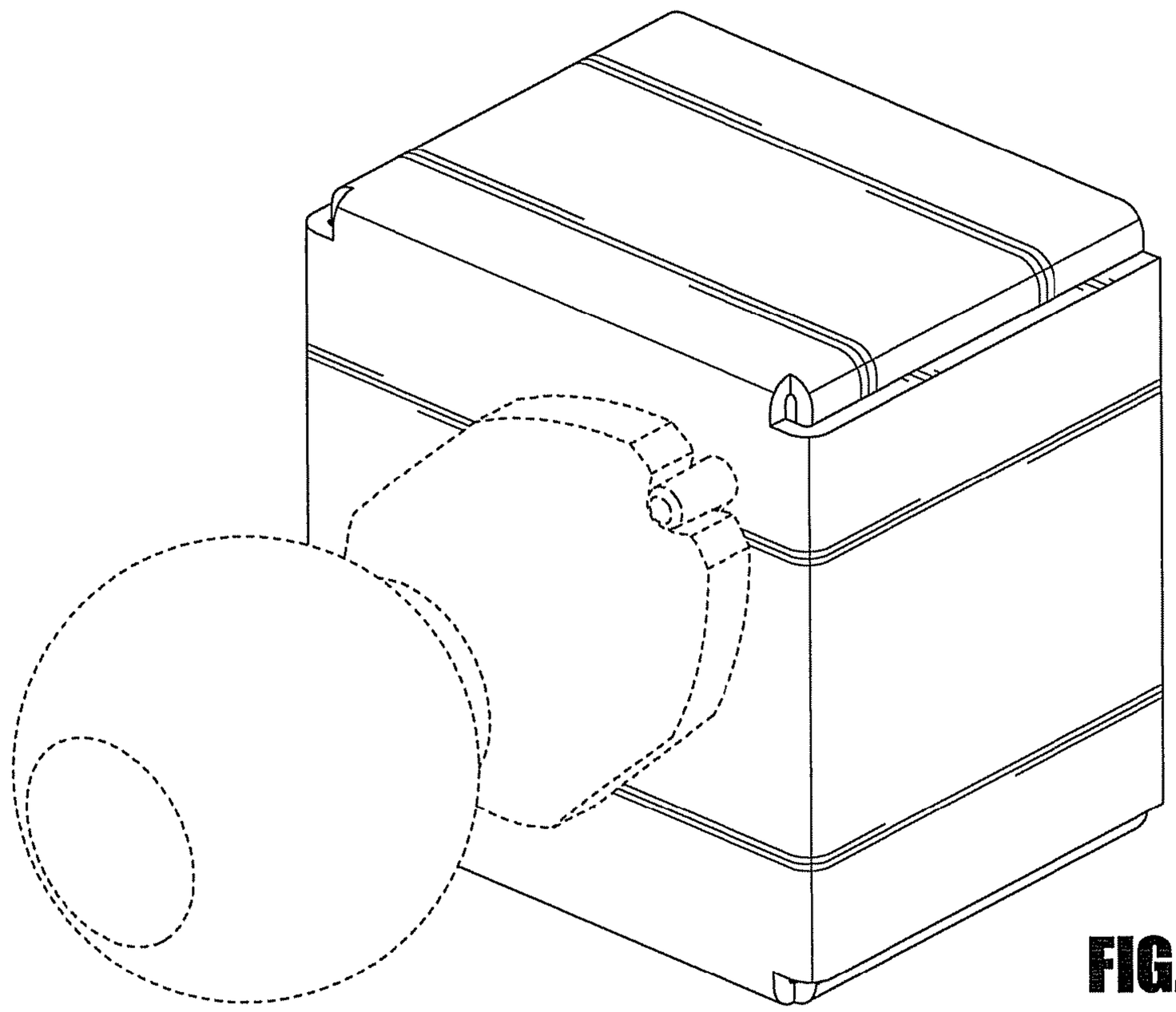

FIG. 1

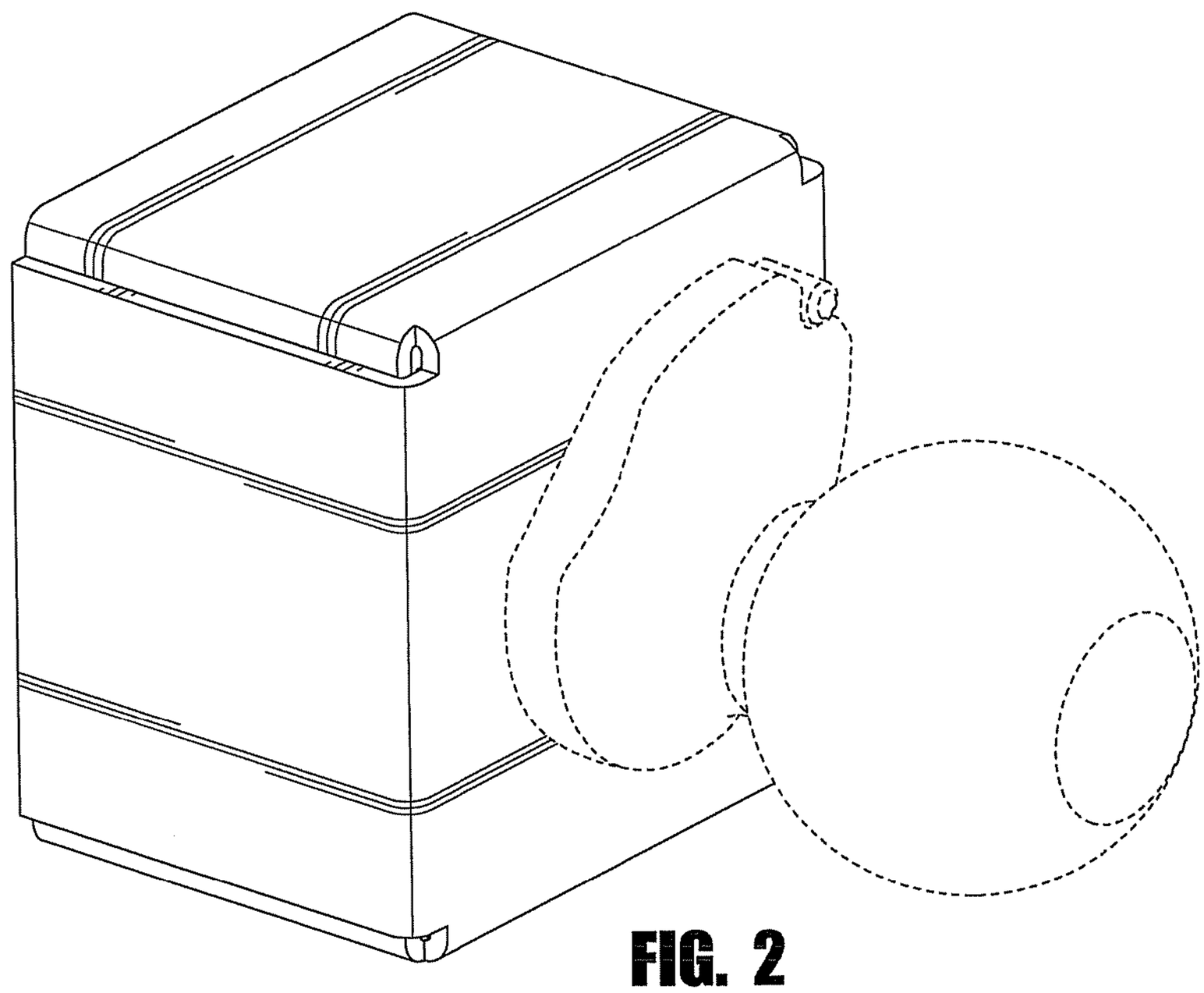

FIG. 2

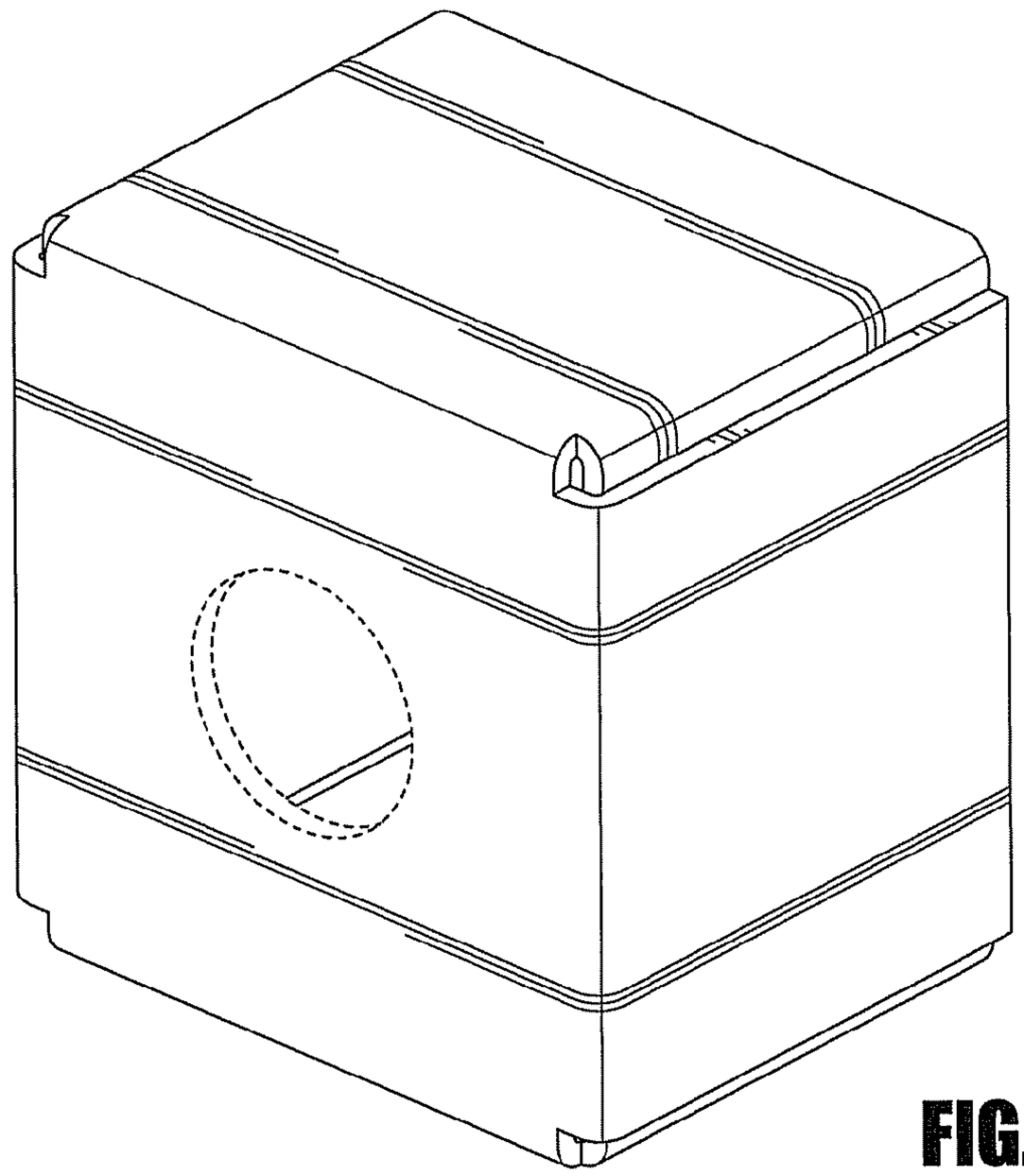

FIG. 3

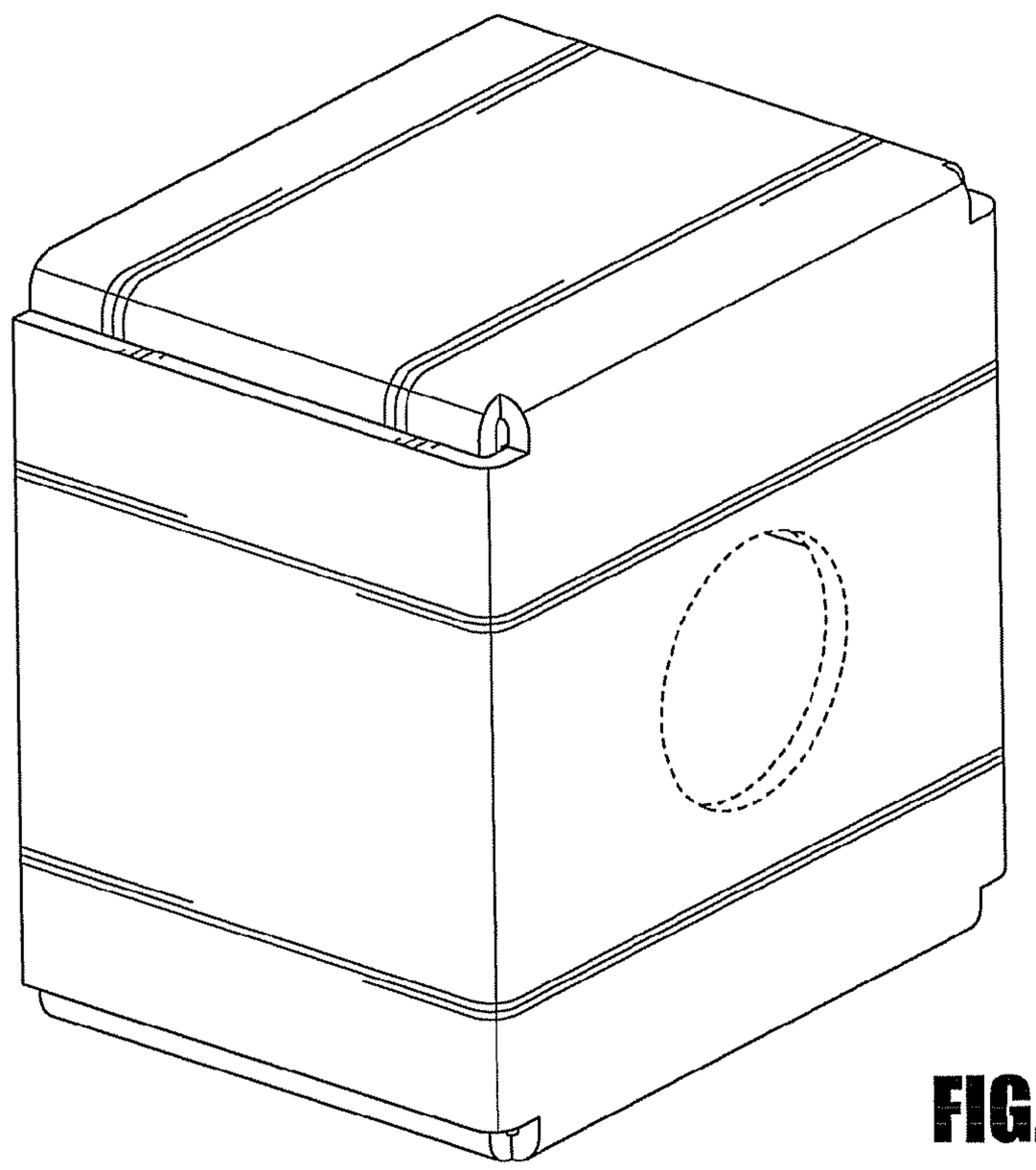

FIG. 4

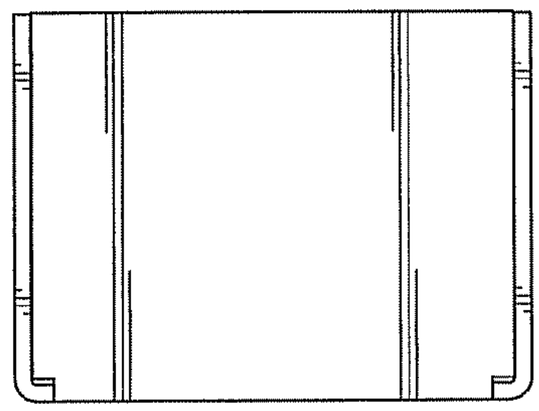

FIG. 6

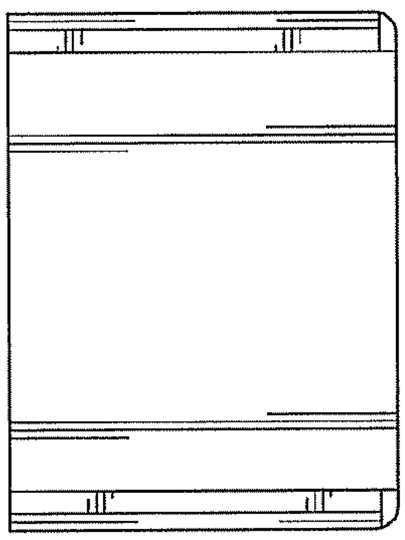

FIG. 8

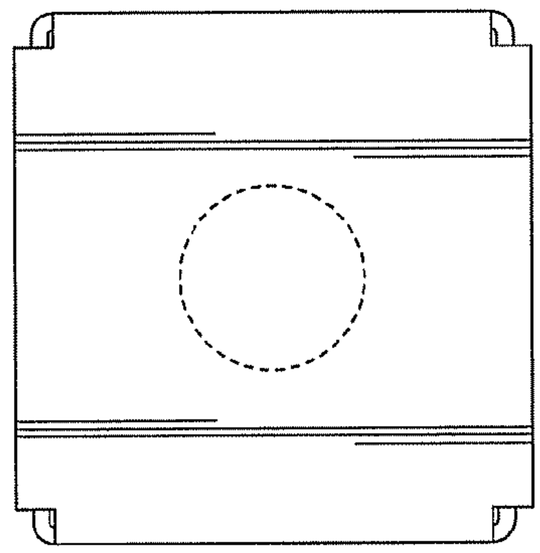

FIG. 7

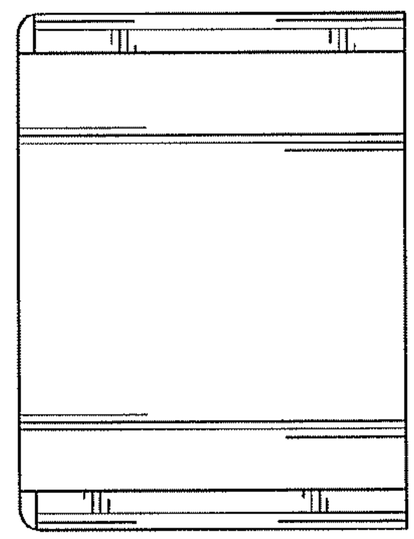

FIG. 5

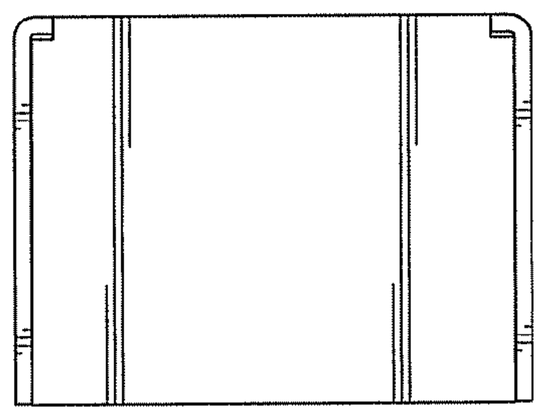

FIG. 9

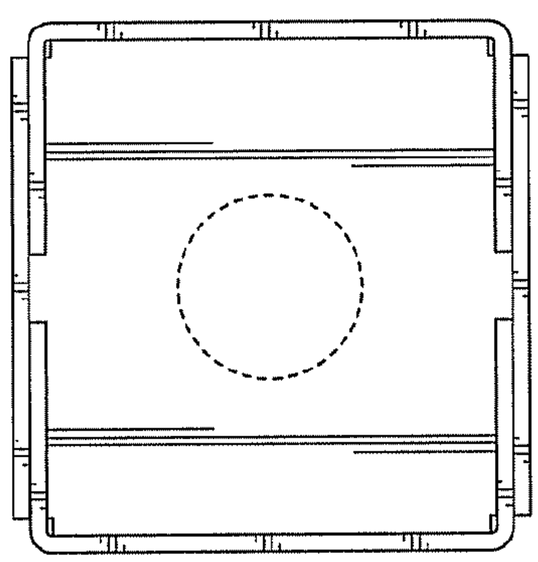

FIG. 10