US00D578547S

(12) United States Design Patent

Shimomura et al.

(10) Patent No.: US D578,547 S
(45) Date of Patent: ** Oct. 14, 2008

(54) **INTERNAL COMBUSTION ENGINE**

(75) Inventors: **Takashi Shimomura**, Takatsuki (JP); **Eishin Nakashima**, Takarazuka (JP)

(73) Assignee: **Kubota Corporation**, Osaka (JP)

(**) Term: **14 Years**

(21) Appl. No.: **29/273,479**

(22) Filed: **Mar. 6, 2007**

(30) **Foreign Application Priority Data**

Nov. 8, 2006 (JP) D2006-030508

(51) **LOC (8) Cl.** **15-01**
(52) **U.S. Cl.** **D15/1**
(58) **Field of Classification Search** ..... D15/1–5, D15/149, 14, 17; D13/112, 184, 199; D34/15; 74/606 R; 56/320.2; 123/47.1, 306, 308, 123/661, 667, 84.47, 572, 657, 195 C, 198 E, 123/50 A, 50 B, 50 R, 65 R, 70 R, 198 R; 180/89.1
See application file for complete search history.

(56) **References Cited**

U.S. PATENT DOCUMENTS

D310,373 S * 9/1990 Ishii et al. D15/1
D416,265 S * 11/1999 Kato et al. D15/1
D421,024 S * 2/2000 Katoh D15/1
D487,751 S * 3/2004 Neeley et al. D15/5
6,857,399 B2 * 2/2005 Davis et al. 123/41.7
D557,280 S * 12/2007 Osumi D15/1
2004/0007198 A1 * 1/2004 Bonde et al. ..... 123/195 C
2004/0025810 A1 * 2/2004 Davis et al. 123/41.7
2004/0025827 A1 * 2/2004 Davis ..... 123/198 E

* cited by examiner

Primary Examiner—Ian Simmons
Assistant Examiner—Wan Laymon
(74) *Attorney, Agent, or Firm*—The Webb Law Firm

(57) **CLAIM**

The ornamental design for an internal combustion engine, as shown and described.

DESCRIPTION

FIG. **1** is a front view of an internal combustion engine showing our new design;

FIG. **2** is a rear view thereof;

FIG. **3** is a left side view thereof;

FIG. **4** is a right side view thereof;

FIG. **5** is a top plan view thereof;

FIG. **6** is a bottom view thereof;

FIG. **7** is a front right perspective view thereof;

FIG. **8** is a front left perspective view thereof; and,

FIG. **9** is a rear left perspective view thereof.

1 Claim, 9 Drawing Sheets

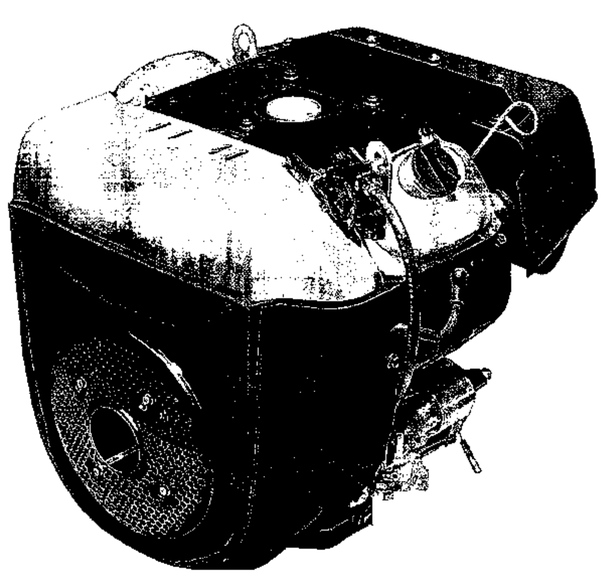

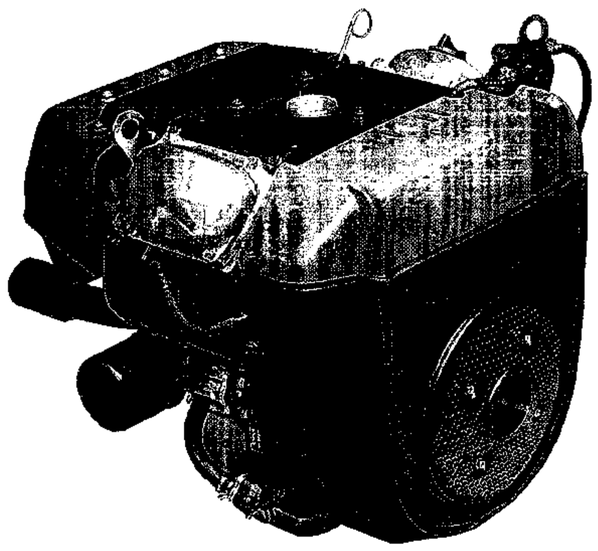

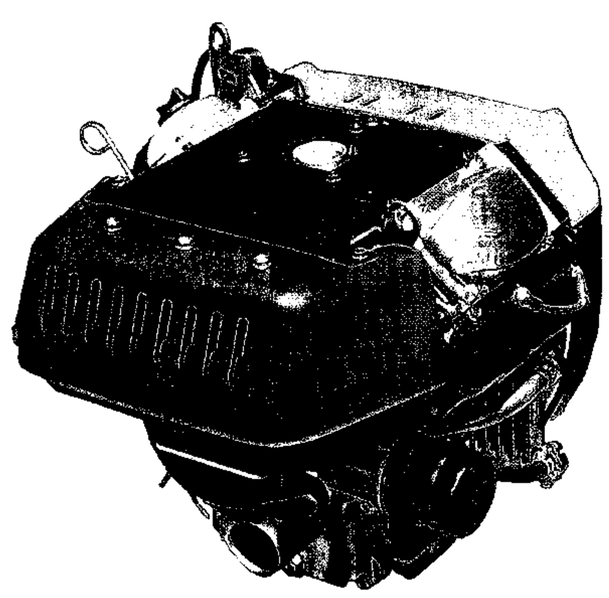

Figure 1

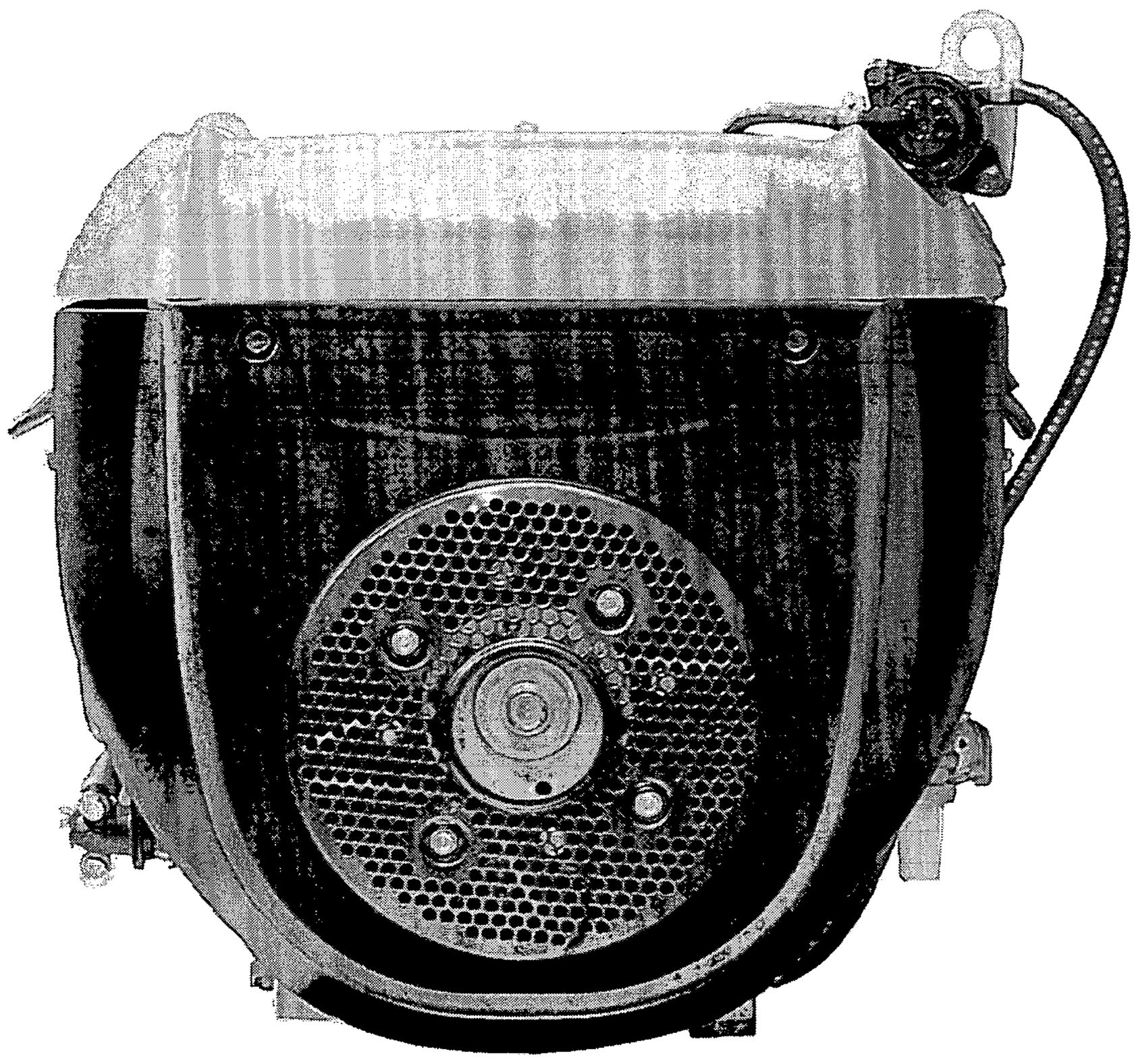

Figure 2

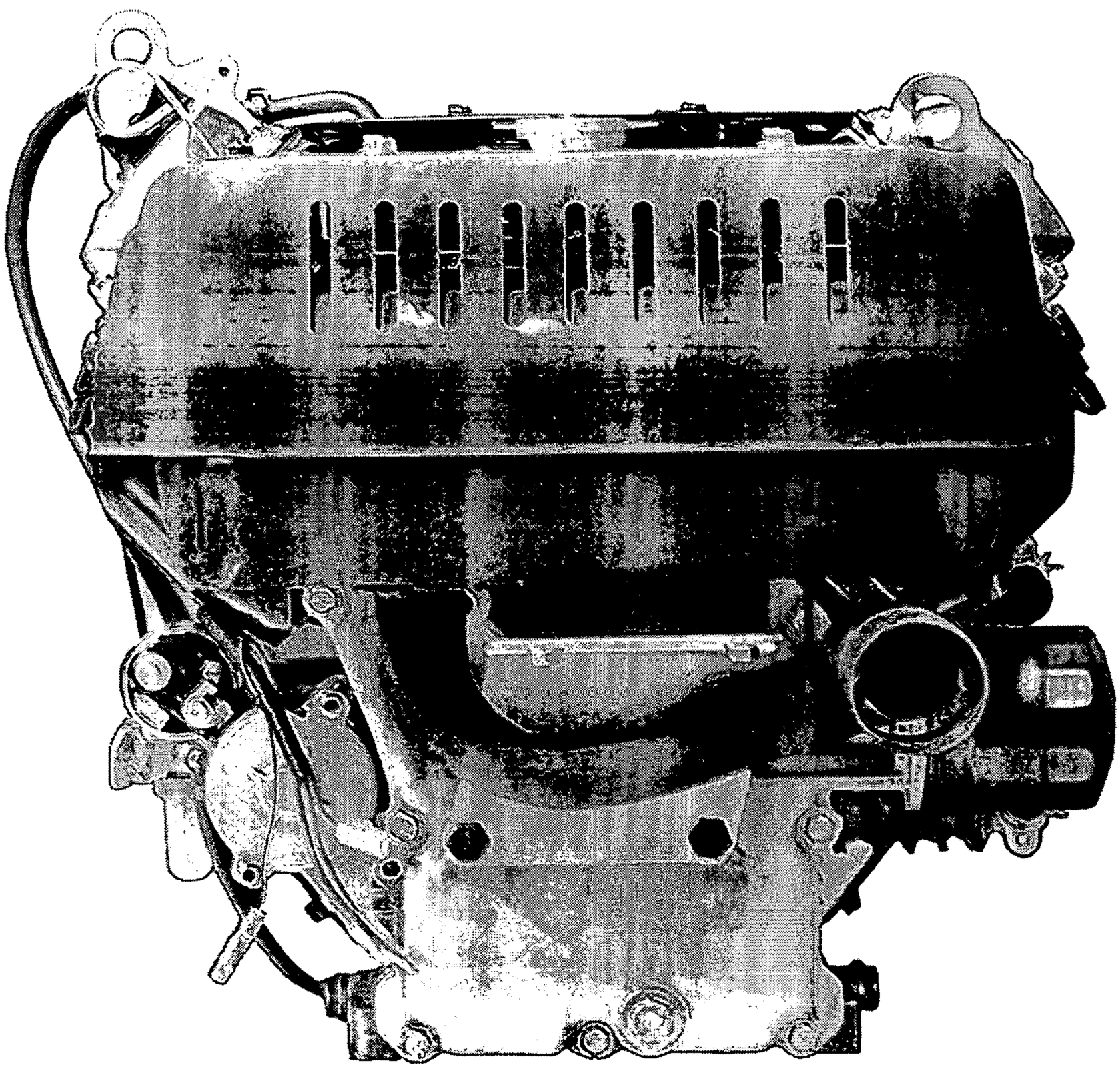

Figure 3

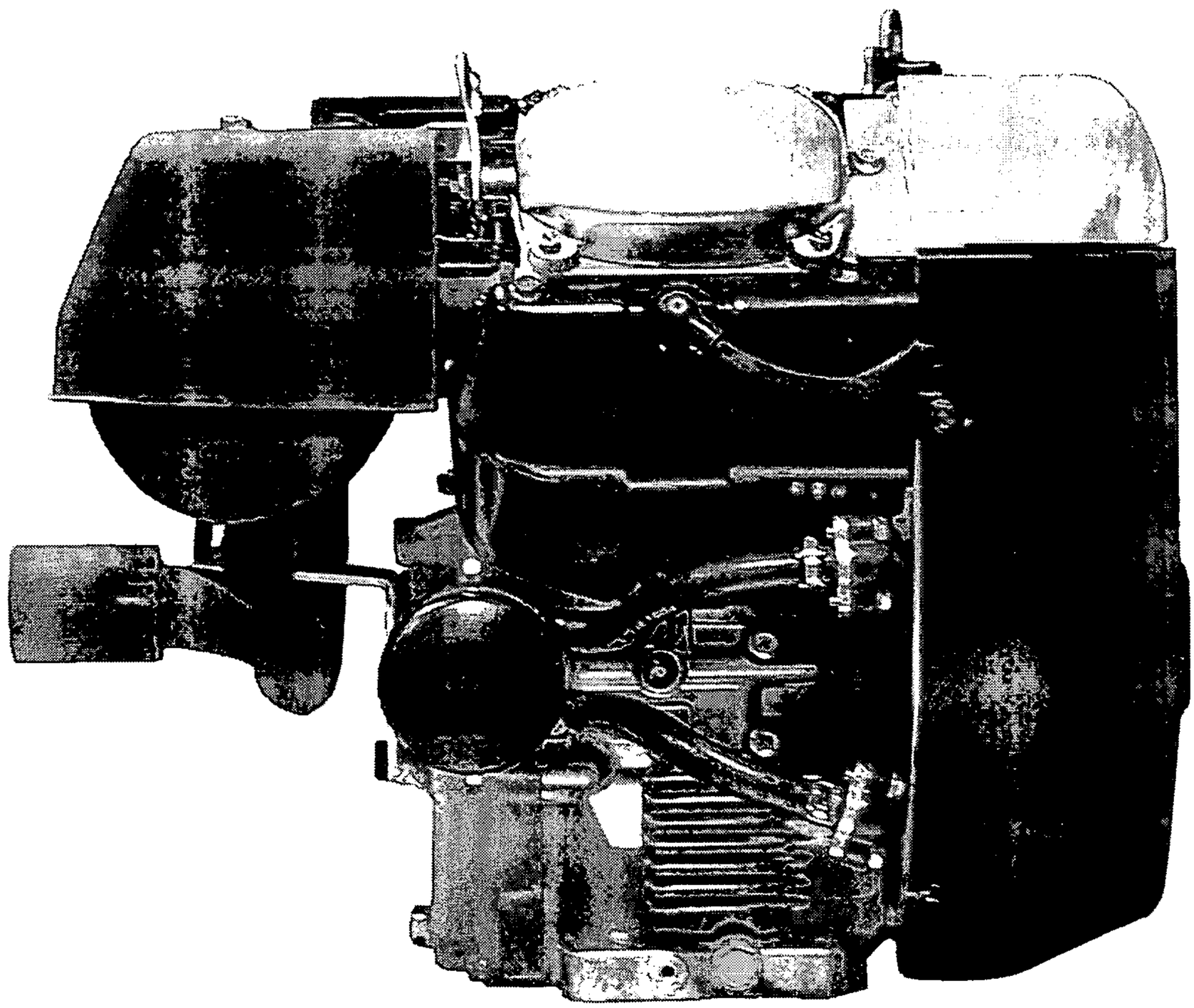

Figure 4

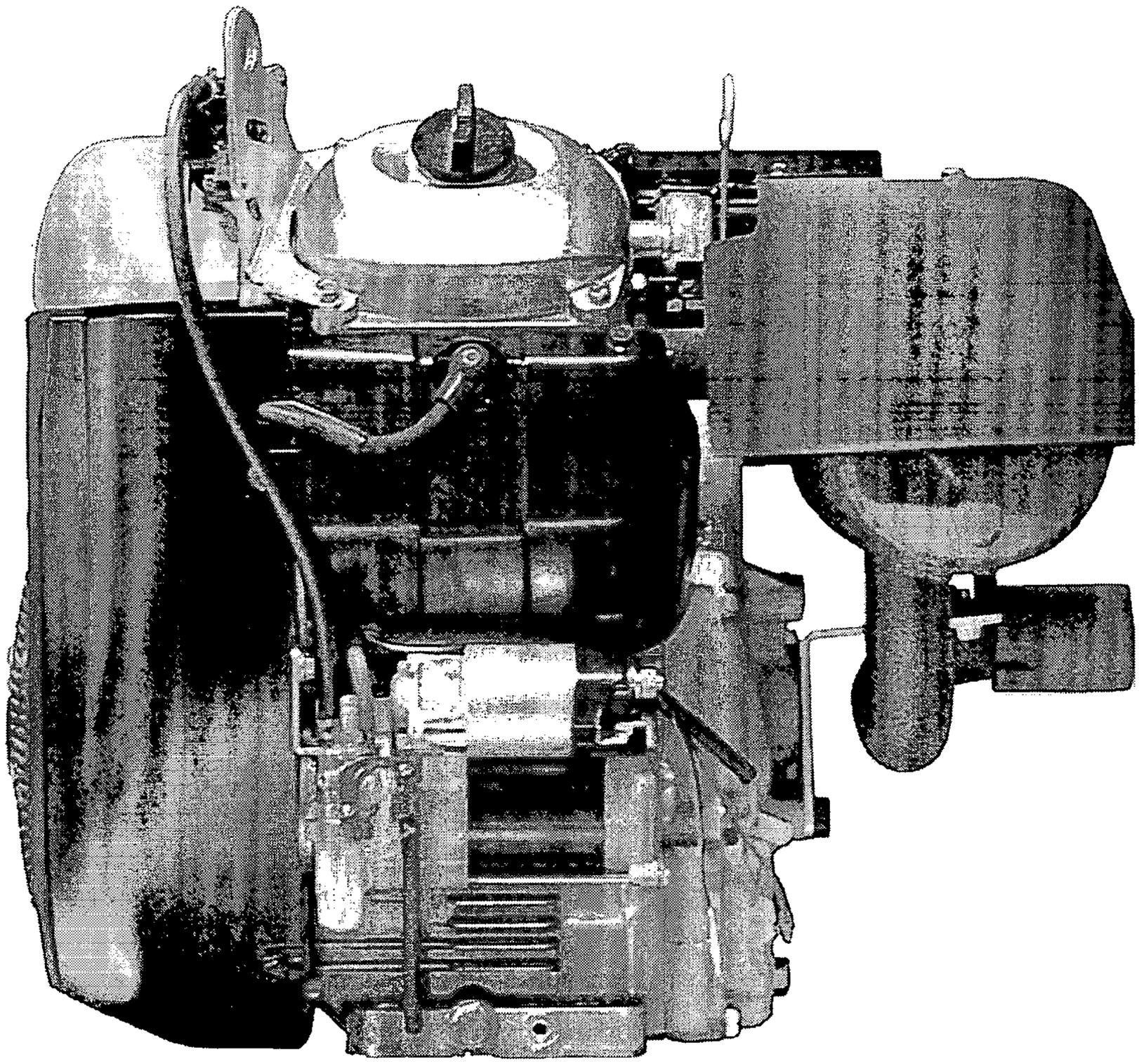

Figure 5

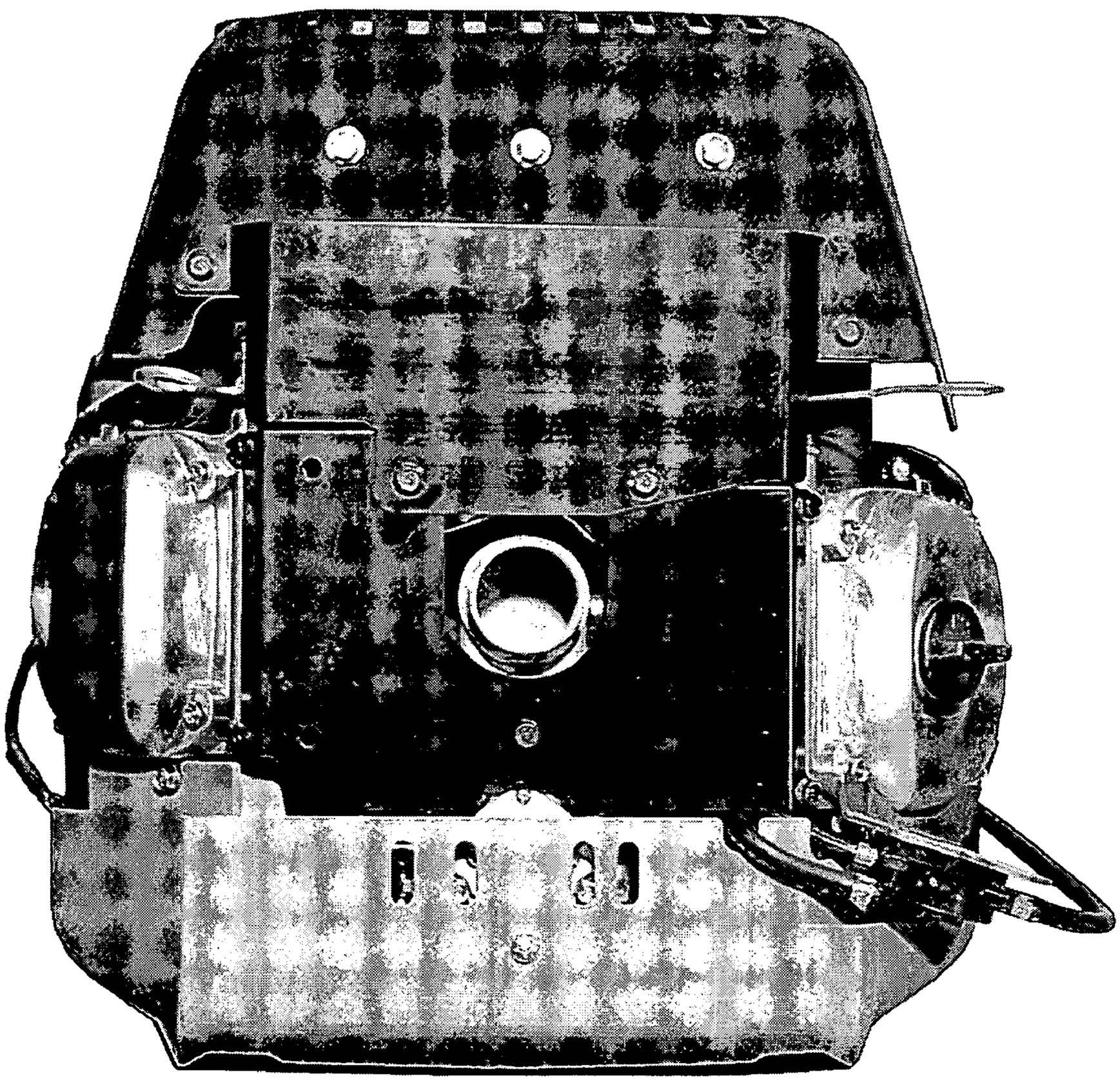

Figure 6

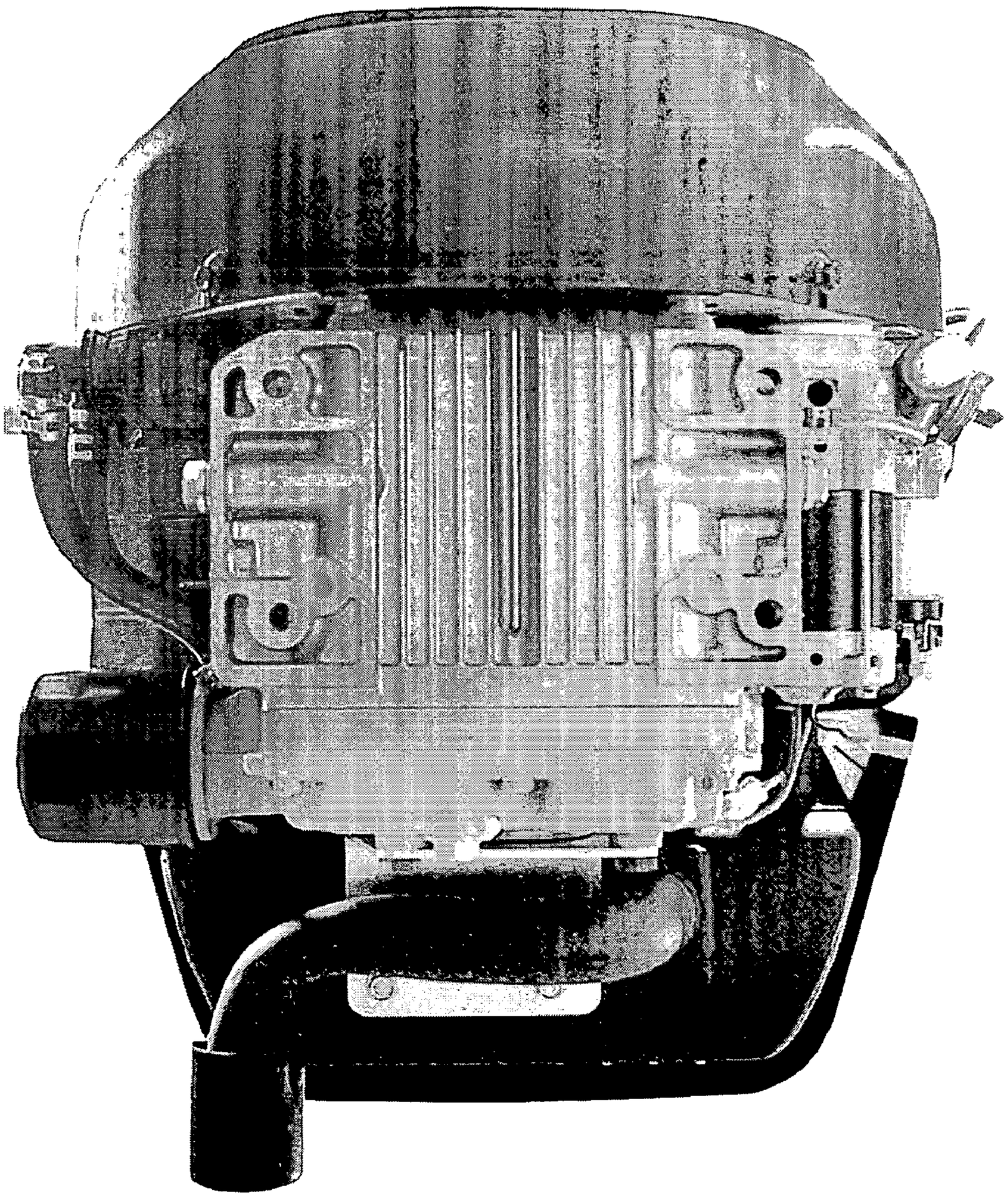

Figure 7

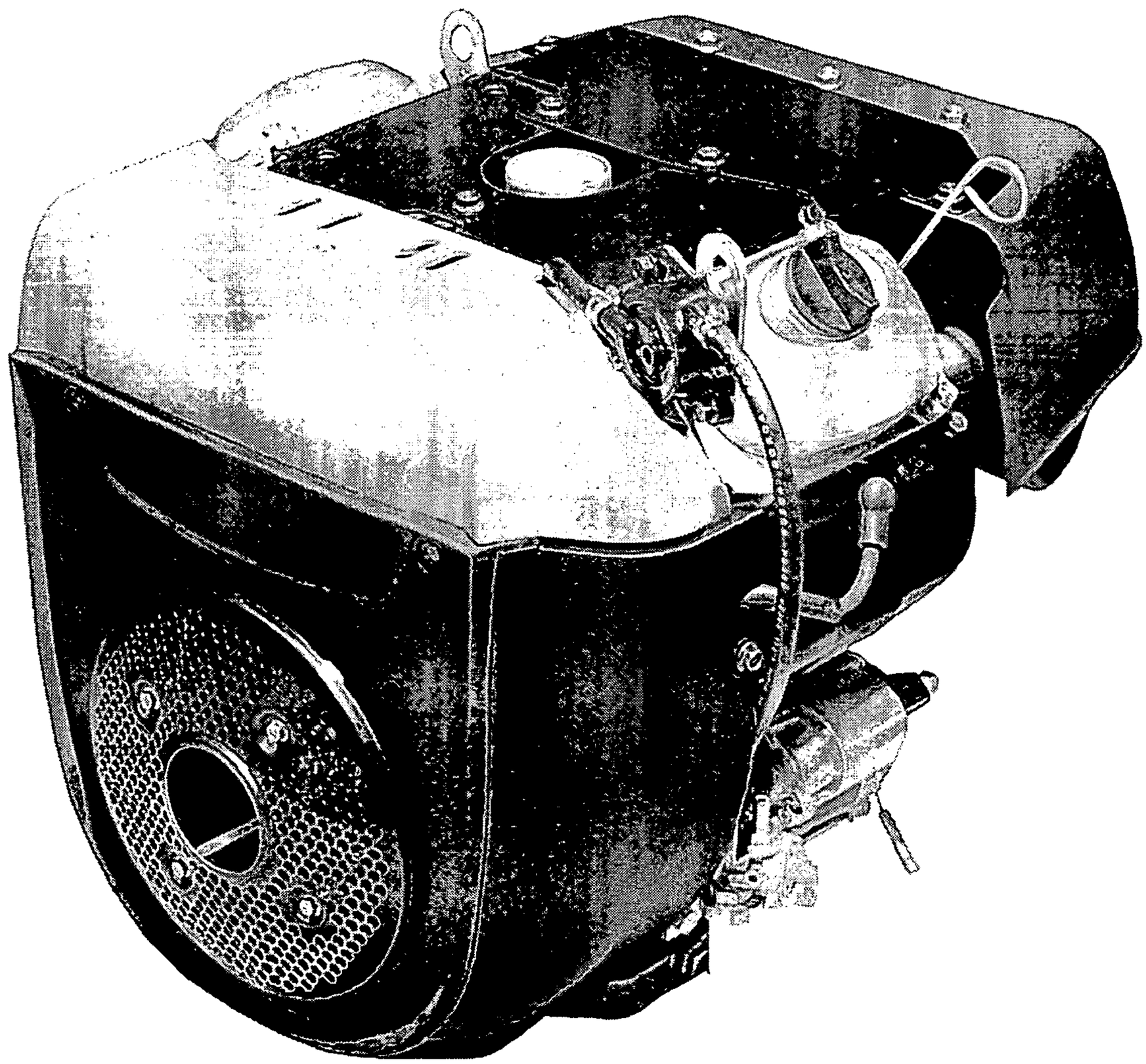

Figure 8

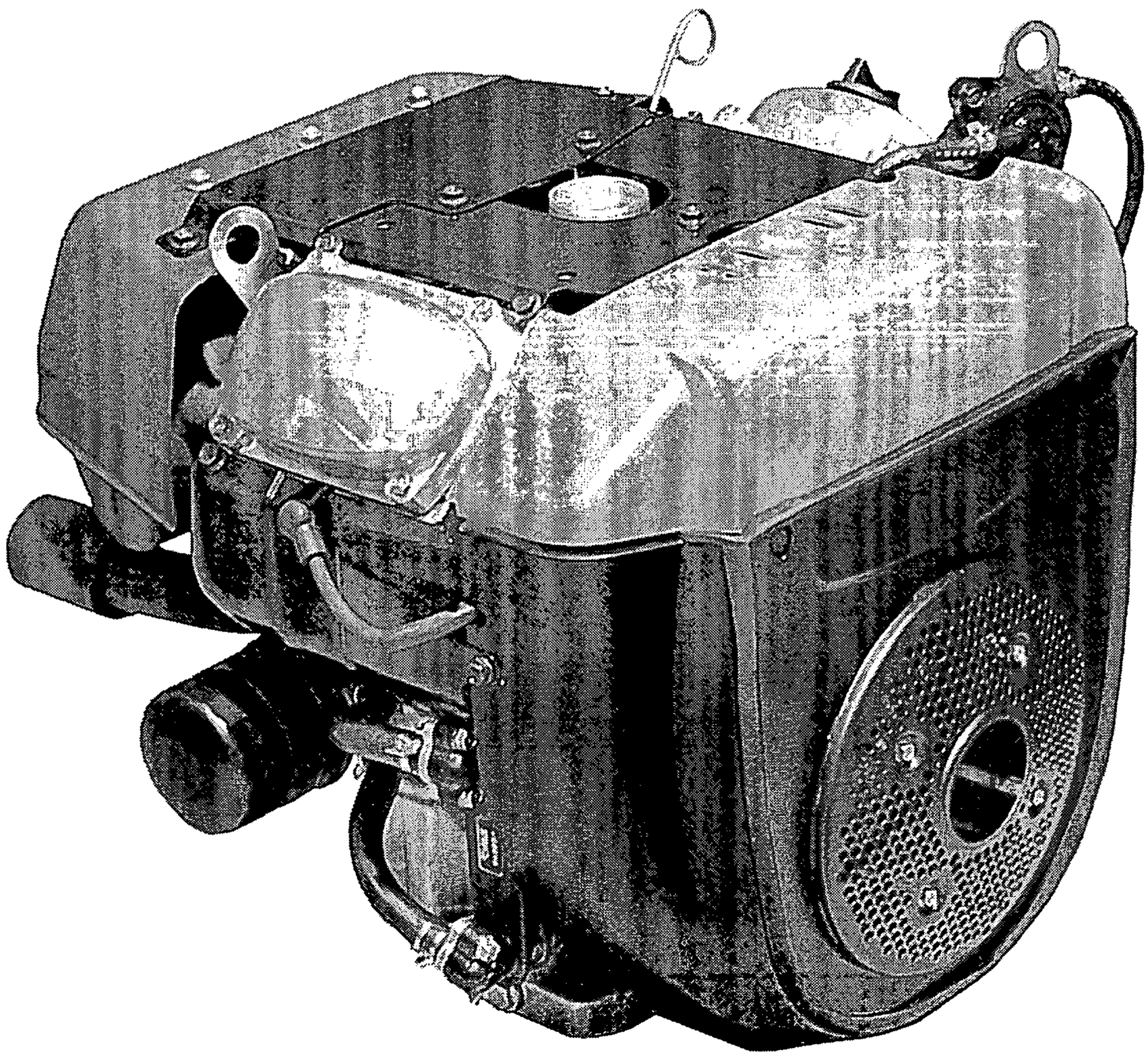
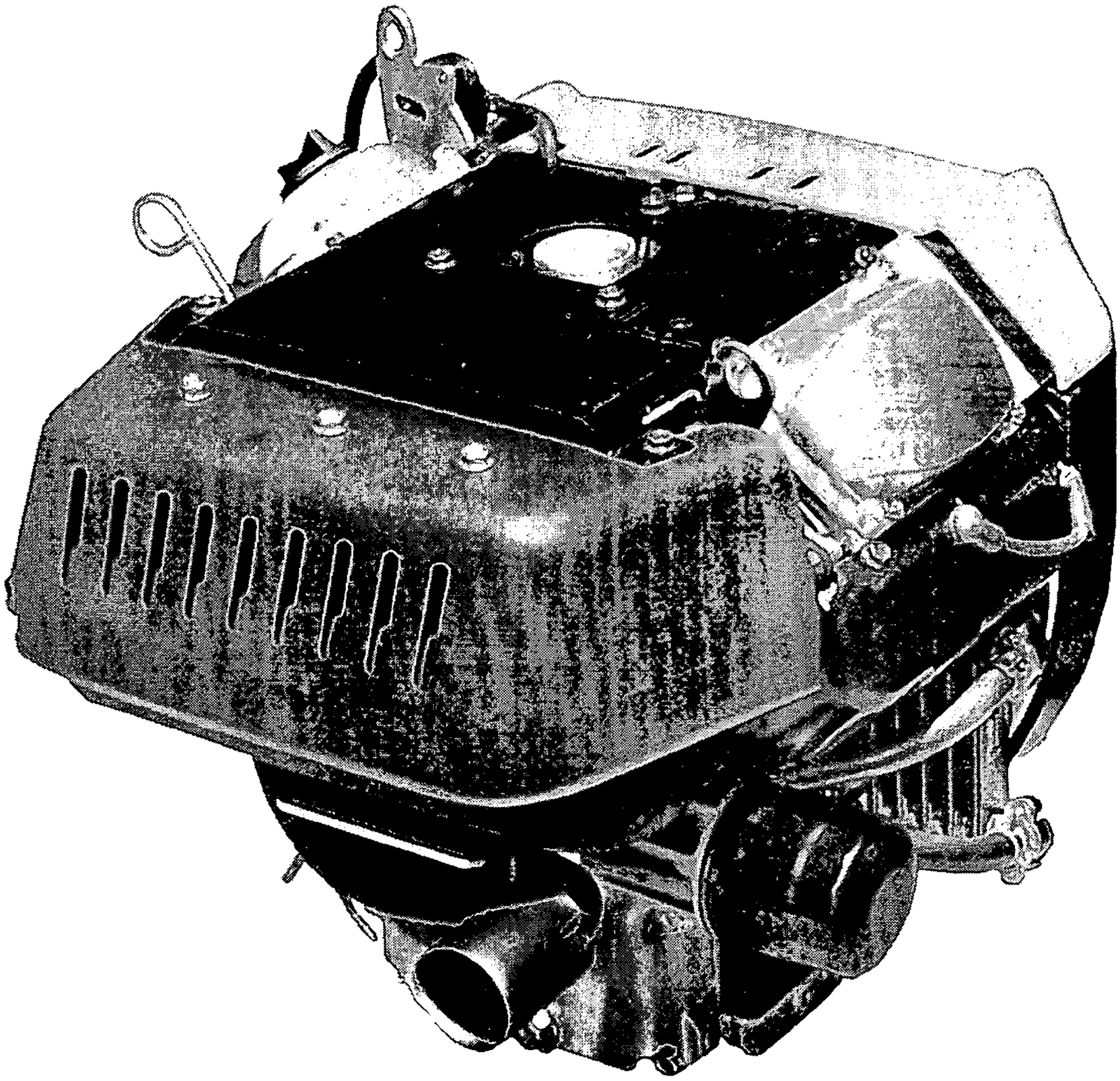
Figure 9