US00D575395S

(12) United States Design Patent

Hushka

(10) Patent No.: US D575,395 S
(45) Date of Patent: ** Aug. 19, 2008

(54) **HEMOSTAT STYLE ELONGATED DISSECTING AND DIVIDING INSTRUMENT**

(75) Inventor: **Dylan Hushka**, Boulder, CO (US)

(73) Assignee: **TYCO Healthcare Group LP**, North Haven, CT (US)

(**) Term: **14 Years**

(21) Appl. No.: **29/272,731**

(22) Filed: **Feb. 15, 2007**

(51) **LOC (8) Cl.** **24-02**

(52) **U.S. Cl.** **D24/133**; D24/144; D24/145; D24/146

(58) **Field of Classification Search** D24/133, D24/143, 145, 146, 147, 144; 606/51, 170, 606/48, 42, 206, 204, 205, 207; 600/564
See application file for complete search history.

(56) **References Cited**

U.S. PATENT DOCUMENTS

371,664 A 10/1887 Brannan et al.

(Continued)

FOREIGN PATENT DOCUMENTS

CA 2104423 2/1994

(Continued)

OTHER PUBLICATIONS

Sigel et al. "The Mechanism of Blood Vessel Closure by High Frequency Electrocoagulation" Surgery Gynecology & Obstetrics, Oct. 1965 pp. 823-831.

(Continued)

Primary Examiner—Ian Simmons
Assistant Examiner—Carissa C Fitts

(57) **CLAIM**

I claim the ornamental design for a hemostat style elongated dissecting and dividing instrument, as shown and described.

DESCRIPTION

FIG. **1** is a front perspective view of a hemostat style elongated dissecting and dividing instrument in accordance with an embodiment of the present design;

FIG. **2** is a front elevation view of the hemostat style elongated dissecting and dividing instrument of FIG. **1**;

FIG. **3** is a rear elevation view front elevation view of the hemostat style elongated dissecting and dividing instrument of FIGS. **1** and **2**;

FIG. **4** is a top plan view rear elevation view of the hemostat style elongated dissecting and dividing instrument of FIGS. **1**–**3**;

FIG. **5** is a bottom plan view of the hemostat style elongated dissecting and dividing instrument of FIGS. **1**–**4**;

FIG. **6** is a right side elevational view of the hemostat style elongated dissecting and dividing instrument of FIGS. **1**–**5**; and,

FIG. **7** is a left side elevational view of the hemostat style elongated dissecting and dividing instrument of FIGS. **1**–**6**.

In FIGS. **1**–**7**, the features of the hemostat style elongated dissecting and dividing instrument shown in phantom lines are for illustrative purposes only and do not constitute a part of the claimed design.

This design is not limited to the exact details shown in the figure, since equivalents and colorable imitations thereof will be evident to a person of ordinary skill in the art. Thus, within the scope of the appended claim, which is intended to cover only the ornamental and novel elements shown in the drawing, the invention may be practiced otherwise than as specifically shown and described herein.

1 Claim, 6 Drawing Sheets

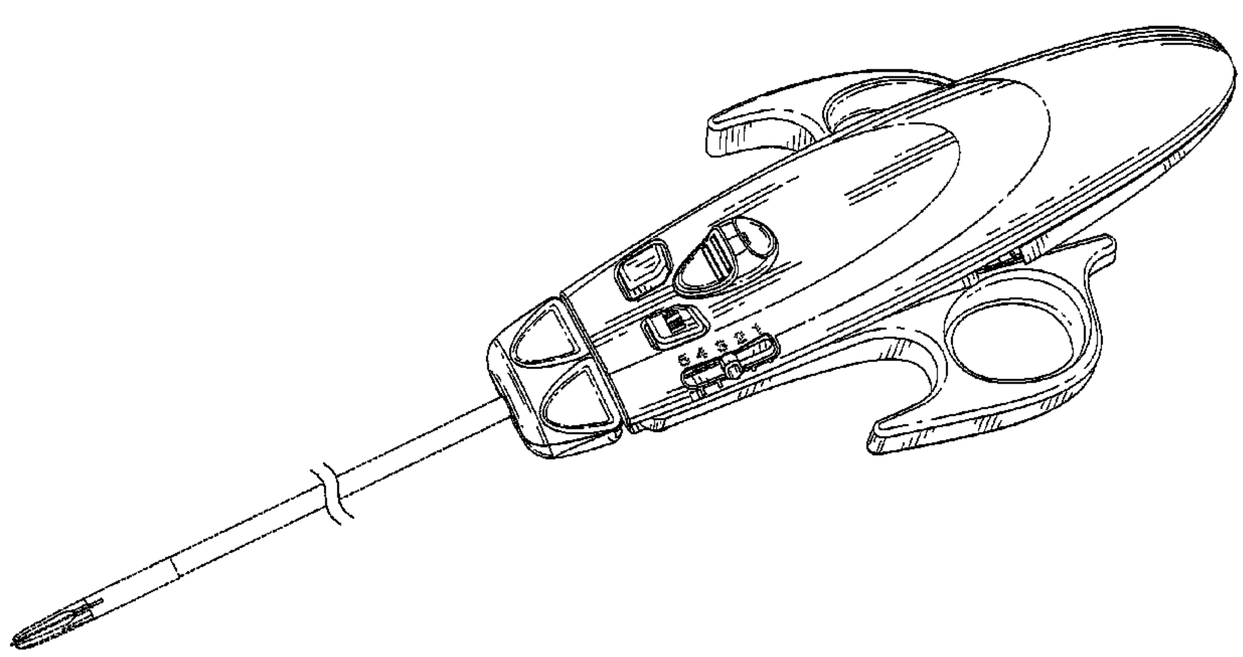

U.S. PATENT DOCUMENTS

702,472	A	6/1902	Pignolet
728,883	A	5/1903	Downes
1,586,645	A	6/1926	Bierman
2,002,594	A	5/1935	Wappler et al.
2,011,169	A	8/1935	Wappler
2,031,682	A	2/1936	Wappler et al.
2,176,479	A	10/1939	Willis
2,305,156	A	12/1942	Grubel
2,632,661	A	3/1953	Cristofv
2,668,538	A	2/1954	Baker
2,796,065	A	6/1957	Kapp
3,459,187	A	8/1969	Pallotta
3,643,663	A	2/1972	Sutter
3,651,811	A	3/1972	Hildebrandt et al.
3,862,630	A	1/1975	Balamuth
3,866,610	A	2/1975	Kletschka
3,911,766	A	10/1975	Fridolph et al.
3,920,021	A	11/1975	Hiltebrandt
3,921,641	A	11/1975	Hulka
3,938,527	A	2/1976	Rioux et al.
3,952,749	A	4/1976	Fridolph et al.
3,970,088	A	7/1976	Morrison
3,987,795	A	10/1976	Morrison
4,005,714	A	2/1977	Hiltebrandt
4,041,952	A	8/1977	Morrison, Jr. et al.
4,043,342	A	8/1977	Morrison, Jr.
4,074,718	A	2/1978	Morrison, Jr.
4,088,134	A	5/1978	Mazzariello
4,112,950	A	9/1978	Pike
4,127,222	A	11/1978	Adams
4,128,099	A	12/1978	Bauer
4,165,746	A	8/1979	Burgin
4,300,564	A	11/1981	Furihata
4,370,980	A	2/1983	Lottick
4,416,276	A	11/1983	Newton et al.
4,452,246	A	6/1984	Bader et al.
4,492,231	A	1/1985	Auth
4,552,143	A	11/1985	Lottick
4,574,804	A	3/1986	Kurwa
4,597,379	A	7/1986	Kihn et al.
4,600,007	A	7/1986	Lahodny et al.
4,655,216	A	4/1987	Tischer
4,657,016	A	4/1987	Garito et al.
4,662,372	A	5/1987	Sharkany et al.
4,671,274	A	6/1987	Sorochenko
4,685,459	A	8/1987	Xoch et al.
D295,893	S	5/1988	Sharkany et al.
D295,894	S	5/1988	Sharkany et al.
4,763,669	A	8/1988	Jaeger
4,827,929	A	5/1989	Hodge
4,887,612	A	12/1989	Esser et al.
4,938,761	A	7/1990	Ensslin
4,985,030	A	1/1991	Melzer et al.
5,007,908	A	4/1991	Rydell
5,026,370	A	6/1991	Lottick
5,084,057	A	1/1992	Green et al.
5,099,840	A	3/1992	Goble et al.
5,112,343	A *	5/1992	Thornton 606/143
5,116,332	A	5/1992	Lottick
5,147,357	A	9/1992	Rose et al.
5,151,102	A	9/1992	Xamiyama et al.
5,176,695	A	1/1993	Dulebohn
5,190,541	A	3/1993	Abele et al.
5,196,009	A	3/1993	Kirwan, Jr.
5,197,964	A	3/1993	Parins
5,215,101	A	6/1993	Jacobs et al.
5,217,457	A	6/1993	Delahuerga et al.
5,217,458	A	6/1993	Parins
5,217,460	A	6/1993	Knoepfler
5,219,354	A	6/1993	Choudhury et al.
5,244,462	A	9/1993	Delahuerga et al.
5,250,047	A	10/1993	Rydell
5,258,006	A	11/1993	Rydell et al.
5,261,918	A	11/1993	Phillips et al.
5,275,615	A	1/1994	Rose
5,277,201	A	1/1994	Stern
5,282,799	A	2/1994	Rydell
5,290,286	A	3/1994	Parins
5,304,203	A	4/1994	El-Mallawany et al.
5,308,357	A	5/1994	Lichtman
5,318,589	A	6/1994	Lichtman
5,324,289	A	6/1994	Eggers
5,330,471	A	7/1994	Eggers
5,334,183	A	8/1994	Wuchinich
5,334,215	A	8/1994	Chen
5,336,221	A	8/1994	Anderson
5,342,359	A	8/1994	Rydell
5,342,381	A	8/1994	Tidemand
5,342,393	A	8/1994	Stack
5,352,222	A	10/1994	Rydell
5,354,271	A	10/1994	Voda
5,356,408	A	10/1994	Rydell
5,366,477	A	11/1994	LeMarie, III et al.
5,368,600	A	11/1994	Failla et al.
5,383,897	A	1/1995	Wholey
5,389,098	A	2/1995	Tsuruta et al.
5,389,104	A	2/1995	Hahnen et al.
5,391,166	A	2/1995	Eggers
5,391,183	A	2/1995	Janzen et al.
5,396,900	A	3/1995	Slater et al.
5,403,312	A	4/1995	Yates et al.
5,411,519	A	5/1995	Tovey et al.
5,411,520	A	5/1995	Nash et al.
5,413,571	A	5/1995	Katsaros et al.
5,415,657	A	5/1995	Taymor-Luria
5,422,567	A	6/1995	Matsunaga
5,423,810	A	6/1995	Goble et al.
5,425,739	A	6/1995	Jessen
5,429,616	A	7/1995	Schaffer
5,431,674	A	7/1995	Basile et al.
5,437,292	A	8/1995	Kipshidze et al.
5,438,302	A	8/1995	Goble
5,441,517	A	8/1995	Kensey et al.
5,443,463	A	8/1995	Stern et al.
5,443,464	A	8/1995	Russell et al.
5,443,480	A	8/1995	Jacobs et al.
5,445,638	A	8/1995	Rydell et al.
5,445,658	A	8/1995	Durrfeld et al.
5,451,224	A	9/1995	Goble et al.
5,456,684	A	10/1995	Schmidt et al.
5,458,598	A	10/1995	Feinberg et al.
5,460,629	A	10/1995	Shlain et al.
5,462,546	A	10/1995	Rydell
5,472,443	A	12/1995	Cordis et al.
5,478,351	A	12/1995	Meade et al.
5,480,409	A	1/1996	Riza
5,484,436	A	1/1996	Eggers et al.
5,496,317	A	3/1996	Goble et al.
5,496,347	A	3/1996	Hashiguchi et al.
5,499,997	A	3/1996	Sharpe et al.
5,509,922	A	4/1996	Aranyi et al.
5,514,134	A	5/1996	Rydell et al.
5,527,313	A	6/1996	Scott et al.
5,531,744	A	7/1996	Nardella et al.
5,536,251	A	7/1996	Evard et al.
5,540,684	A	7/1996	Hassler, Jr.
5,540,685	A	7/1996	Parins et al.
5,540,715	A	7/1996	Katsaros et al.
5,542,945	A	8/1996	Fritzsch
5,558,672	A	9/1996	Edwards et al.
5,562,699	A	10/1996	Heimberger et al.
5,569,241	A	10/1996	Edwards
5,569,243	A	10/1996	Kortenbach et al.
5,571,100	A	11/1996	Goble et al.

5,573,424 A 11/1996 Poppe
5,573,534 A 11/1996 Stone
5,573,535 A 11/1996 Viklund
5,578,052 A 11/1996 Koros et al.
5,582,611 A 12/1996 Tsukagoshi et al.
5,585,896 A 12/1996 Yamazaki et al.
5,590,570 A 1/1997 LeMaire, III et al.
5,601,601 A 2/1997 Tal et al.
5,603,711 A 2/1997 Parins et al.
5,603,723 A 2/1997 Aranyi et al.
5,611,798 A 3/1997 Eggers
5,626,578 A 5/1997 Tihon
5,626,609 A 5/1997 Zvenyatsky et al.
5,630,833 A 5/1997 Katsaros et al.
5,637,110 A 6/1997 Pennybacker et al.
5,643,294 A 7/1997 Tovey et al.
5,647,869 A 7/1997 Goble et al.
5,647,871 A 7/1997 Levine et al.
5,649,959 A 7/1997 Hannam et al.
5,658,281 A 8/1997 Heard
D384,413 S * 9/1997 Zlock et al. D24/145
5,662,667 A 9/1997 Knodel
5,665,100 A 9/1997 Yoon
5,667,526 A 9/1997 Levin
5,674,220 A 10/1997 Fox et al.
5,681,282 A 10/1997 Eggers et al.
5,693,051 A 12/1997 Schulze et al.
5,695,522 A 12/1997 LeMaire, III et al.
5,700,261 A 12/1997 Brinkerhoff
5,700,270 A * 12/1997 Peyser et al. 606/142
5,702,390 A 12/1997 Austin et al.
5,707,369 A 1/1998 Vaitekunas et al.
5,709,680 A 1/1998 Yates et al.
5,716,366 A 2/1998 Yates
5,720,744 A 2/1998 Eggleston et al.
5,727,428 A 3/1998 LeMaire, III et al.
5,735,848 A 4/1998 Yates et al.
5,743,906 A 4/1998 Parins et al.
5,755,717 A 5/1998 Yates et al.
5,766,130 A 6/1998 Selmonosky
5,766,166 A 6/1998 Hooven
5,766,170 A 6/1998 Eggers
5,769,849 A 6/1998 Eggers
5,772,655 A 6/1998 Bauer et al.
5,772,670 A 6/1998 Brosa
5,776,128 A 7/1998 Eggers
5,776,130 A 7/1998 Buysse et al.
5,779,701 A 7/1998 McBrayer et al.
5,792,137 A 8/1998 Carr et al.
5,792,177 A 8/1998 Kaseda
5,797,927 A 8/1998 Yoon
5,797,938 A 8/1998 Paraschac et al.
5,797,958 A 8/1998 Yoon
5,800,449 A 9/1998 Wales
5,807,393 A 9/1998 Williamson, IV et al.
5,810,808 A 9/1998 Eggers
5,810,811 A 9/1998 Yates et al.
5,810,877 A 9/1998 Roth et al.
5,814,043 A 9/1998 Shapeton
5,817,083 A 10/1998 Williams, IV et al.
5,820,630 A 10/1998 Lind
5,827,271 A 10/1998 Buysse et al.
5,827,279 A 10/1998 Hughett et al.
5,827,281 A 10/1998 Levin
5,833,690 A 11/1998 Yates et al.
5,843,080 A 12/1998 Fleenor et al.
5,849,022 A 12/1998 Sakashita et al.
5,853,412 A 12/1998 Mayenberger
5,860,976 A 1/1999 Billings et al.
5,876,401 A 3/1999 Schulze et al.
5,891,141 A 4/1999 Rydell
5,891,142 A 4/1999 Eggers et al.
5,893,863 A 4/1999 Yoon
5,893,875 A 4/1999 O'Connor et al.
5,893,877 A 4/1999 Gampp, Jr. et al.
5,902,301 A 5/1999 Olig
5,906,630 A 5/1999 Anderhub et al.
5,908,420 A 6/1999 Parins et al.
5,911,719 A 6/1999 Eggers
5,913,874 A 6/1999 Berns et al.
5,921,984 A 7/1999 Sutcu et al.
5,925,043 A 7/1999 Kumar et al.
5,935,126 A 8/1999 Riza
5,944,718 A 8/1999 Dafforn et al.
5,951,549 A 9/1999 Richardson et al.
5,954,720 A 9/1999 Wilson et al.
5,957,923 A 9/1999 Hahnen et al.
5,961,514 A 10/1999 Long et al.
5,976,132 A 11/1999 Morris
5,984,939 A 11/1999 Yoon
5,989,277 A 11/1999 LeMaire, III et al.
6,004,335 A 12/1999 Vaitekunas et al.
6,010,516 A 1/2000 Hulka et al.
6,024,741 A 2/2000 Williamson et al.
6,024,744 A 2/2000 Kese et al.
6,030,384 A 2/2000 Nezhat
6,033,399 A 3/2000 Gines
6,039,733 A 3/2000 Buysse et al.
6,041,679 A 3/2000 Slater et al.
6,050,996 A 4/2000 Schmaltz et al.
6,053,914 A 4/2000 Eggers et al.
6,053,933 A 4/2000 Balazs et al.
D424,694 S 5/2000 Tetzlaff et al.
D425,201 S 5/2000 Tetzlaff et al.
6,059,782 A 5/2000 Novak et al.
RE36,795 E 7/2000 Rydell
6,083,223 A 7/2000 Baker
6,086,586 A 7/2000 Hooven
6,090,107 A 7/2000 Borgmeier et al.
6,096,037 A 8/2000 Mulier et al.
6,099,550 A 8/2000 Yoon
6,102,909 A 8/2000 Chen et al.
6,110,171 A 8/2000 Rydell
6,113,596 A 9/2000 Hooven et al.
6,113,598 A 9/2000 Baker
6,117,158 A 9/2000 Measamer et al.
6,123,701 A 9/2000 Nezhat
H1904 H 10/2000 Yates et al.
6,126,658 A 10/2000 Baker
6,152,923 A 11/2000 Ryan
6,162,220 A 12/2000 Nezhat
6,174,309 B1 1/2001 Wrublewski et al.
6,179,834 B1 1/2001 Buysse et al.
6,179,837 B1 1/2001 Hooven
6,183,467 B1 2/2001 Shapeton et al.
6,187,003 B1 2/2001 Buysse et al.
6,190,386 B1 2/2001 Rydell
6,193,718 B1 2/2001 Kortenbach et al.
6,206,876 B1 3/2001 Levine et al.
6,206,877 B1 3/2001 Kese et al.
6,217,602 B1 4/2001 Redmon
6,221,039 B1 4/2001 Durgin et al.
6,224,593 B1 5/2001 Ryan et al.
6,228,080 B1 5/2001 Gines
6,228,083 B1 5/2001 Lands et al.
6,267,761 B1 7/2001 Ryan
6,270,497 B1 8/2001 Sekino et al.
6,270,508 B1 8/2001 Klieman et al.
6,273,887 B1 8/2001 Yamauchi et al.
6,277,117 B1 8/2001 Tetzlaff et al.
6,280,458 B1 8/2001 Boche et al.
6,283,961 B1 9/2001 Underwood et al.
D449,886 S 10/2001 Tetzlaff et al.
6,322,561 B1 11/2001 Eggers et al.
6,334,860 B1 1/2002 Dorn
6,334,861 B1 1/2002 Chandler et al.

6,345,532 B1 2/2002 Coudray et al.
6,350,264 B1 2/2002 Hooven
6,352,536 B1 3/2002 Buysse et al.
6,358,249 B1 3/2002 Chen et al.
D457,958 S 5/2002 Dycus et al.
D457,959 S 5/2002 Tetzlaff et al.
6,387,094 B1 5/2002 Eitenmuller
6,398,779 B1 6/2002 Buysse et al.
6,402,747 B1 6/2002 Lindemann et al.
6,409,728 B1 6/2002 Ehr et al.
H2037 H 7/2002 Yates et al.
6,419,675 B1 7/2002 Gallo, Sr.
6,425,896 B1 7/2002 Baltschun et al.
6,440,144 B1 8/2002 Bacher
6,443,952 B1 9/2002 Mulier et al.
6,443,970 B1 9/2002 Schulze et al.
6,451,018 B1 9/2002 Lands et al.
6,458,128 B1 10/2002 Schulze
6,458,130 B1 10/2002 Frazier et al.
6,464,701 B1 10/2002 Hooven et al.
6,464,702 B2 * 10/2002 Schulze et al. 606/51
6,464,704 B2 10/2002 Schmaltz et al.
6,511,480 B1 1/2003 Tetzlaff et al.
6,527,771 B1 3/2003 Weadock et al.
6,585,735 B1 7/2003 Frazier et al.
6,602,252 B2 8/2003 Mollenauer
6,620,161 B2 9/2003 Schulze et al.
6,626,901 B1 9/2003 Treat et al.
6,641,595 B1 11/2003 Moran et al.
6,652,521 B2 11/2003 Schulze
6,656,177 B2 12/2003 Truckai et al.
6,660,072 B2 12/2003 Chatterjee
6,669,696 B2 12/2003 Bacher et al.
6,682,527 B2 1/2004 Strul
6,682,528 B2 1/2004 Frazier et al.
6,685,724 B1 2/2004 Haluck
6,695,840 B2 2/2004 Schulze
6,702,810 B2 3/2004 McClurken et al.
6,726,068 B2 4/2004 Miller
6,726,686 B2 4/2004 Buysse et al.
6,733,498 B2 5/2004 Paton et al.
6,743,229 B2 6/2004 Buysse et al.
6,770,072 B1 8/2004 Truckai et al.
6,773,434 B2 8/2004 Ciarrocca
6,776,780 B2 8/2004 Mulier et al.
6,790,217 B2 9/2004 Schulze et al.
D496,997 S 10/2004 Dycus et al.
6,802,843 B2 10/2004 Truckai et al.
D499,181 S 11/2004 Dycus et al.
6,818,000 B2 11/2004 Muller et al.
6,860,880 B2 3/2005 Treat et al.
6,887,240 B1 5/2005 Lands et al.
6,926,716 B2 8/2005 Baker et al.
6,929,644 B2 8/2005 Truckai et al.
6,932,810 B2 8/2005 Ryan
6,932,816 B2 8/2005 Phan
6,942,662 B2 9/2005 Goble et al.
6,960,210 B2 11/2005 Lands et al.
6,964,662 B2 11/2005 Kidooka
6,994,707 B2 2/2006 Ellman et al.
7,011,657 B2 3/2006 Truckai et al.
7,033,354 B2 4/2006 Keppel
7,052,496 B2 5/2006 Yamauchi
D525,361 S 7/2006 Hushka
7,083,618 B2 8/2006 Couture et al.
7,090,673 B2 8/2006 Dycus et al.
7,101,371 B2 9/2006 Dycus et al.
7,101,372 B2 9/2006 Dycus et al.
7,101,373 B2 9/2006 Dycus et al.
7,103,947 B2 9/2006 Sartor et al.
7,112,199 B2 9/2006 Cosmescu
D531,311 S 10/2006 Guerra et al.
7,118,570 B2 10/2006 Tetzlaff et al.
7,118,587 B2 10/2006 Dycus et al.
7,131,970 B2 11/2006 Moses et al.
7,131,971 B2 11/2006 Dycus et al.
7,135,020 B2 11/2006 Lawes et al.
D533,942 S 12/2006 Kerr et al.
7,147,638 B2 12/2006 Chapman et al.
7,150,097 B2 12/2006 Sremcich et al.
7,150,749 B2 12/2006 Dycus et al.
D535,027 S 1/2007 James et al.
7,156,846 B2 1/2007 Dycus et al.
7,160,298 B2 1/2007 Lawes et al.
7,160,299 B2 1/2007 Baily
7,169,146 B2 1/2007 Truckai et al.
7,179,258 B2 2/2007 Buysse et al.
7,195,631 B2 3/2007 Dumbauld
D541,418 S 4/2007 Schechter et al.
7,207,990 B2 4/2007 Lands et al.
D541,938 S 5/2007 Kerr et al.
7,223,265 B2 5/2007 Keppel
7,232,440 B2 6/2007 Dumbauld et al.
7,241,296 B2 7/2007 Buysse et al.
7,252,667 B2 8/2007 Moses et al.
7,255,697 B2 8/2007 Dycus et al.
7,267,677 B2 9/2007 Johnson et al.
7,270,660 B2 9/2007 Ryan
7,270,664 B2 9/2007 Johnson et al.
2002/0013583 A1 1/2002 Camran et al.
2002/0049442 A1 4/2002 Roberts et al.
2002/0099372 A1 7/2002 Schulze et al.
2002/0107517 A1 8/2002 Witt et al.
2002/0111624 A1 8/2002 Witt et al.
2002/0188294 A1 12/2002 Couture et al.
2003/0014052 A1 1/2003 Buysse et al.
2003/0014053 A1 1/2003 Nguyen et al.
2003/0018331 A1 1/2003 Dycus et al.
2003/0018332 A1 1/2003 Schmaltz et al.
2003/0032956 A1 2/2003 Lands et al.
2003/0069571 A1 4/2003 Treat et al.
2003/0078578 A1 4/2003 Truckai Csaba et al.
2003/0109875 A1 6/2003 Tetzlaff et al.
2003/0114851 A1 6/2003 Truckai et al.
2003/0139741 A1 7/2003 Goble et al.
2003/0139742 A1 7/2003 Wampler et al.
2003/0158549 A1 8/2003 Swanson
2003/0181910 A1 9/2003 Dycus et al.
2003/0199869 A1 10/2003 Johnson et al.
2003/0216732 A1 11/2003 Truckai et al.
2003/0220637 A1 11/2003 Csaba Truckai et al.
2003/0229334 A1 12/2003 Dycus et al.
2003/0236325 A1 12/2003 Bonora
2004/0030330 A1 2/2004 Brassell et al.
2004/0030332 A1 2/2004 Knowlton et al.
2004/0049185 A1 3/2004 Latterell et al.
2004/0064151 A1 4/2004 Mollenauer
2004/0082952 A1 4/2004 Dycus et al.
2004/0087943 A1 5/2004 Dycus et al.
2004/0115296 A1 6/2004 Duffin
2004/0116924 A1 6/2004 Dycus et al.
2004/0116979 A1 6/2004 Truckai et al.
2004/0122423 A1 6/2004 Dycus et al.
2004/0143263 A1 7/2004 Schechter et al.
2004/0147925 A1 7/2004 Buysse et al.
2004/0162557 A1 8/2004 Tetzlaff et al.
2004/0193153 A1 9/2004 Sarter et al.
2004/0230189 A1 11/2004 Keppel
2004/0243125 A1 12/2004 Dycus et al.
2004/0249371 A1 12/2004 Dycus et al.
2004/0249374 A1 12/2004 Tetzlaff et al.
2005/0004564 A1 1/2005 Wham et al.
2005/0021025 A1 1/2005 Buysse et al.
2005/0021027 A1 1/2005 Shields et al.
2005/0033278 A1 2/2005 McClurken et al.
2005/0101951 A1 5/2005 Wham et al.

2005/0101952	A1	5/2005	Lands et al.
2005/0107784	A1	5/2005	Moses et al.
2005/0113818	A1	5/2005	Sartor et al.
2005/0113819	A1	5/2005	Wham et al.
2005/0113826	A1	5/2005	Johnson et al.
2005/0113827	A1	5/2005	Dumbauld et al.
2005/0113828	A1	5/2005	Shields et al.
2005/0149151	A1	7/2005	Orszulak et al.
2006/0064085	A1	3/2006	Schechter et al.
2006/0079891	A1	4/2006	Arts et al.
2006/0129146	A1	6/2006	Dycus et al.
2006/0161150	A1	7/2006	Keppel
2006/0167450	A1	7/2006	Johnson et al.
2006/0167452	A1	7/2006	Moses et al.
2006/0173452	A1	8/2006	Buysse et al.
2006/0189980	A1	8/2006	Johnson et al.
2006/0190035	A1	8/2006	Hushka et al.
2006/0217709	A1	9/2006	Couture et al.
2006/0224158	A1	10/2006	Odom et al.
2006/0259036	A1	11/2006	Tetzlaff et al.
2006/0264922	A1	11/2006	Sartor et al.
2006/0264931	A1	11/2006	Chapman et al.
2006/0271038	A1	11/2006	Johnson et al.
2007/0043352	A1	2/2007	Garrison et al.
2007/0043353	A1	2/2007	Dycus et al.
2007/0055231	A1	3/2007	Dycus et al.
2007/0062017	A1	3/2007	Dycus et al.
2007/0074807	A1	4/2007	Guerra
2007/0078456	A1	4/2007	Dumbauld et al.
2007/0078458	A1	4/2007	Dumbauld et al.
2007/0078459	A1	4/2007	Johnson et al.
2007/0088356	A1	4/2007	Moses et al.
2007/0106295	A1	5/2007	Garrison et al.
2007/0106297	A1	5/2007	Dumbauld et al.
2007/0118111	A1	5/2007	Weinberg
2007/0118115	A1	5/2007	Artale et al.
2007/0142833	A1	6/2007	Dycus et al.
2007/0142834	A1	6/2007	Dumbauld
2007/0156139	A1	7/2007	Schechter et al.
2007/0156140	A1	7/2007	Baily
2007/0173811	A1	7/2007	Couture et al.
2007/0173814	A1	7/2007	Hixson et al.
2007/0179499	A1	8/2007	Garrison
2007/0203485	A1	8/2007	Keppel
2007/0213706	A1	9/2007	Dumbauld et al.
2007/0213707	A1	9/2007	Dumbauld et al.
2007/0213708	A1	9/2007	Dumbauld et al.
2007/0213712	A1	9/2007	Buysse et al.

FOREIGN PATENT DOCUMENTS

DE	2415263		10/1975
DE	2627679		1/1977
DE	8712328		3/1988
DE	4303882		8/1994
DE	29616210		1/1997
DE	19608716		4/1997
DE	19751106		5/1998
DE	19751108		5/1999
EP	0364216	A1	4/1990
EP	518230	A1	12/1992
EP	0 541 930	B1	5/1993
EP	0572131		12/1993
EP	584787	A1	3/1994
EP	0589453	A2	3/1994
EP	0623316	A1	11/1994
EP	0624348	A2	11/1994
EP	0650701	A1	5/1995
EP	0694290	A3	3/1996
EP	0717966	A1	6/1996
EP	0754437	A3	3/1997
EP	853922	A1	7/1998
EP	0875209	A1	11/1998
EP	0878169	A1	11/1998
EP	0887046	A3	1/1999
EP	0923907	A1	6/1999
EP	0986990	A1	3/2000
EP	1034747	A1	9/2000
EP	1034748	A1	9/2000
EP	1025807	A3	10/2000
EP	1034746	A3	10/2000
EP	1050278	A1	11/2000
EP	1053719	A1	11/2000
EP	1053720	A1	11/2000
EP	1055399	A1	11/2000
EP	1055400	A1	11/2000
EP	1080694	A1	3/2001
EP	1082944	A1	3/2001
EP	1159926	A2	12/2001
EP	1301135	A	4/2003
EP	1330991	A1	7/2003
EP	1486177	A2	6/2004
EP	1472984	A1	11/2004
EP	1530952	A1	5/2005
EP	1532932	A1	5/2005
EP	1632192	A1	3/2006
EP	1645238	A1	4/2006
EP	1707143	A1	10/2006
GB	2214430	A	6/1989
JP	501068		9/1984
JP	502328		3/1992
JP	5-40112		2/1993
JP	063436644	A2	12/1994
JP	07265328	A2	10/1995
JP	08056955	A2	3/1996
JP	08252263	A2	10/1996
JP	09010223	A2	1/1997
JP	11244298	A2	9/1999
JP	2000342599	A2	12/2000
JP	2000350732	A2	12/2000
JP	2001008944	A2	1/2001
JP	2001029356	A2	2/2001
JP	2001128990	A2	5/2001
RU	401367		11/1974
WO	WO 89/00757		1/1989
WO	WO 92/06642		4/1992
WO	WO 94/08524	A	4/1994
WO	WO 94/20025		9/1994
WO	WO 95/02369		1/1995
WO	WO 95/07662		3/1995
WO	WO 95/15124		6/1995
WO	WO 96/05776		2/1996
WO	WO 96/022056		7/1996
WO	WO 96/13218		9/1996
WO	WO 97/00646		1/1997
WO	WO 97/00647		1/1997
WO	WO 97/10764		3/1997
WO	WO 97/24073		7/1997
WO	WO 97/24993		7/1997
WO	WO 98/27880		7/1998
WO	WO 99/03407		1/1999
WO	WO 99/03408		1/1999
WO	WO 99/03409		1/1999
WO	WO 99/12488		3/1999
WO	WO 99/40857		8/1999
WO	WO 99/40861		8/1999
WO	WO 99/51158		10/1999
WO	WO 99/66850	A	12/1999
WO	WO 00/24330		5/2000
WO	WO 00/24331		5/2000
WO	WO 00/41638		7/2000
WO	WO 00/47124		8/2000
WO	WO 00/53112		9/2000
WO	WO 01/17448	A	3/2001
WO	WO 01/54604		8/2001
WO	WO 02/07627		1/2002

WO	WO 02/080783	10/2002
WO	WO 02/080784	10/2002
WO	WO 02/080785	10/2002
WO	WO 02/080786	10/2002
WO	WO 02/080793	10/2002
WO	WO 02/080794	10/2002
WO	WO 02/080795	10/2002
WO	WO 02/080796	10/2002
WO	WO 02/080797	10/2002
WO	WO 02/080798	10/2002
WO	WO 02/080799	10/2002
WO	WO 02/081170	10/2002
WO	WO 03/101311	12/2003
WO	WO 04/032777	4/2004
WO	WO 04/052221	6/2004
WO	WO 04/073490	9/2004
WO	WO 04/073753	9/2004
WO	WO 04/082495	9/2004
WO	WO 04/098383	11/2004
WO	WO 04/103156	12/2004
WO	WO 05/004735	1/2005
WO	WO 05/110264	11/2005

OTHER PUBLICATIONS

Bergdahl et al. "Studies on Coagulation and the Development of an Automatic Computerized Bipolar Coagulator" J.Neurosurg, vol. 75, Jul. 1991, pp. 148-151.
Kennedy et al. "High-burst-strength, feedback-controlled bipolar vessel sealing" Surgical Endoscopy (1998) 12: 876-878.
Peterson et al. "Comparison of Healing Process Following Ligation with Sutures and Bipolar Vessel Sealing" Surgical Technology International (2001).
Linehan et al. "A Phase I Study of the LigaSure Vessel Sealing System in Hepatic Surgery" Section of HPB Surger, Washington University School of Medicine, St. Louis MO, Presented at AHPBA, Feb. 2001.
Johnson et al. "Evaluation of the LigaSure Vessel Sealing System in Hemorrhoidectormy" American College of Surgeons (ACS) Clinicla Congress Poster (2000).
Sayfan et al. "Sutureless Closed Hemorrhoidectomy: A New Technique" Annals of Surgery vol. 234 No. 1 Jul. 2001 pp. 21-24.
Heniford et al. "Initial Results with an Electrothermal Bipolar Vessel Sealer" Surgical Endoscopy (2000) 15:799-801.
Heniford et al. "Initial Research and Clinical Results with an Electrothermal Bipolar Vessel Sealer" Oct. 1999.
McLellan et al. "Vessel Sealing for Hemostasis During Pelvic Surgery" Int'l Federation of Gynecology and Obstetrics FIGO World Congress 2000, Washington, D.C.
Levy et al. "Use of a New Energy-based Vessel Ligation Device During Vaginal Hysterectomy" Int'l Federation of Gynecology and Obstetrics (FIGO) World Congress 1999.
Crawford et al. "Use of the LigaSure Vessel Sealing System in Urologic Cancer Surger" Grand Rounds in Urology 1999 vol. 1 Issue 4 pp. 10-17.
Rothenberg et al. "Use of the LigaSure Vessel Sealing System in Minimally Invasive Surgery in Children" Int'l Pediatric Endosurgery Group (IPEG) 2000.
Palazzo et al. "Randomized clinical trial of Ligasure versus open haemorrhoidectomy" British Journal of Surgery 2002, 89, 154-157.
"Innovations in Electrosurgery" Sales/Product Literature; Dec. 31, 2000.
LigaSure Vessel Sealing System, the Seal of Confidence in General, Gynecologic, Urologic, and Laparaoscopic Surgery Sales/Product Literature; Jan. 2004.
Carbonell et al., "Comparison of theGyrus PlasmaKinetic Sealer and the Valleylab LigaSure Device in the Hemostatis of Small, Medium, and Large-Sized Arteries".
Carolinas Laparoscopic and Advanced Surgery Program, Carolinas Medical Center, Charlotte, NC 2003.
"Reducing Needlestick Injuries in the Operating Room" Sales/Product Literature 2001.
Chung et al., "Clinical Experience of Sutureless Closed Hemorrhoidectomy with LigaSure" Diseases of the Colon & Rectum vol. 46, No. 1 Jan. 2003.
Strasberg et al., "Use of a Bipolar Vessel-Sealing Device for Parenchymal Transaction During Liver Surgery" Journal of Gastrointestinal Surgery, vol. 6, No. 4, Jul./Aug. 2002 pp. 569-574.
Paul G. Horgan, "A Novel Technique for Parenchymal Division During Hepatectomy" The American Journal of Surgery, vol. 181, No. 3. □Apr. 2001 pp. 236-237.
W. Scott Helton, "LigaSure Vessel Sealing System: Revolutionary Hemostasis Product for General Surgery" Sales/Product Literature 1999.
Michael Choti, "Abdominoperineal Resection with the LigaSure Vessel Sealing System and LigaSure Atlas 20 cm Open Instrument" Innovations That Work, □ Jun. 2003.
Craig Johnson, "Use of the LigaSure Vessel Sealing System in Bloodless Hemorrhoidectomy" Innovations That Work, □Mar. 2000.
Muller et al., "Extended Left Hemicolectomy Using the LigaSure Vessel Sealing System" Innovations That Work,□Sep. 1999.
Herman et al., "Laparoscopic Intestinal Resection With the LigaSure Vessel Sealing System: A Case Report" Innovations That Work,□Feb. 2002.
Carus et al., "Initial Experience With The LigaSure Vessel Sealing System in Abdominal Surgery" Innovations That Work,□Jun. 2002.
Levy et al, "Randomized Trial of Suture Versus Electrosurgical Bipolar Vessel Sealing in Vaginal Hysterectomy" Obstetrics & Gynecology, vol. 102, No. 1, Jul. 2003.
Levy et al., "Update on Hysterectomy—New Technologies and Techniques" OBG Management, Feb. 2003.
Barbara Levy, "Use of a New Vessel Ligation Device During Vaginal Hysterectomy" FIGO 2000, Washington, D.C.
McLellan et al. "Vessel Sealing for Hemostasis During Gynecologic Surgery" Sales/Product Literature 1999.
Sengupta et al., "Use of a Computer-Controlled Bipolar Diathermy System in Radical Prostatectomies and Other Open Urological Surgery" ANZ Journal of Surgery (2001) 71.9 pp. 538-540.
Olsson et al. "Radical Cystectomy in Females" Current Surgical Techniques in Urology, vol. 14, Issue 3, 2001.
E. David Crawford "Use of Novel Vessel Sealing Technology in Management of the Dorsal Veinous Complex" Sales/Product Literature 2000.
Jarrett et al., "Use of the LigaSure Vessel Sealing System for Peri-Hilar Vessels in Laparoscopic Nephrectomy" Sales/Product Literature 2000.
E. David Crawford "Evaluation of a New Vessel Sealing Device in Urologic Cancer Surgery" Sales/Product Literature 2000.
Joseph Ortenberg "LigaSure System Used in Laparoscopic 1st and 2nd Stage Orchiopexy" Innovations That Work, Nov. 2002.
Koyle et al., "Laparoscopic Palomo Varicocela Ligation in Children and Adolescents" Pediatric Endosurgery & Innovative Techniques, vol. 6, No. 1, 2002.
Dulemba et al. "Use of a Bipolar Electrothermal Vessel Sealer in Laparoscopically Assisted Vaginal Hysterectomy" Sales/Product Literature; Jan. 2004.
Johnson et al. "Evaluation of a Bipolar electrothermal Vessel Sealing Device in Hemorrhoidectomy" Sales/Product Literature; Jan. 2004.
Int'l Search Report PCT/US98/18640 dated Dec. 17, 1998.
Int'l Search Report PCT/US98/23950 dated Dec. 29, 1998.
Int'l Search Report PCT/US99/24869 dated Feb. 3, 2000.
Int'l Search Report PCT/US01/11218 dated Aug. 3, 2001.
International Search Report PCT/US01/11224 dated Nov. 13, 2001.
Int'l Search Report PCT/US01/11340 dated Aug. 7, 2001.
Int'l Search Report PCT/US01/11420 dated Oct. 8, 2001.
Int'l Search Report PCT/US02/01890 dated Jul. 17, 2002.
Int'l Search Report PCT/US02/11100 dated Jul. 9, 2002.
Int'l Search Report PCT/US04/03436 dated Oct. 5, 2004.
Int'l Search Report PCT/US04/13273 dated Nov. 22, 2004.
Int'l Search Report PCT/US04/15311 dated Nov. 18, 2004.
Int'l Search Report EP 98944778 dated Oct. 31, 2000.
Int'l Search Report EP 98958575.7 dated Sep. 20, 2002.
Int'l Search Report EP 04027314 dated Mar. 10, 2005.
Int'l Search Report EP 04027479 dated Mar. 8, 2005.
Int'l Search Report EP 04027705 dated Feb. 3, 2005.

Int'l Search Report EP 04013772 dated Apr. 1, 2005.
Int'l Search Report EP 05013463.4 dated Sep. 28, 2005.
Int'l Search Report EP 05013895 dated Oct. 14, 2005.
Int'l Search Report EP 05016399 dated Jan. 5, 2006.
Int'l Search Report EP 05017281 dated Nov. 16, 2005.
Int'l Search Report EP 05019130.3 dated Oct. 18, 2005.
Int'l Search Report EP 05020665.5 dated Feb. 16, 2006.
Int'l Search Report EP 05020666.3 dated Feb. 17, 2006.
Int'l Search Report EP 05021779.3 dated Jan. 18, 2006.
Int'l Search Report EP 05021197.8 dated Jan. 31, 2006.
Int'l Search Report EP 05021937.7 dated Jan. 13, 2006.
Int'l Search Report—extended—EP 05021937.7 dated Mar. 6, 2006.
Int'l Search Report EP 05023017.6 dated Feb. 16, 2006.
Int'l Search Report EP 05021780.1 dated Feb. 9, 2006.
Int'l Search Report EP 06002279.5 dated Mar. 22, 2006.
Int'l Search Report EP 06005185.1 dated Apr. 18, 2006.
Int'l Search Report EP 06006716 dated Aug. 4, 2006.
Int'l Search Report EP 06008779.8 dated Jun. 13, 2006.
Int'l Search Report EP 1683496 dated Jun. 13, 2006.
Int'l Search Report EP 06014461.5 dated Oct. 20, 2006.
Int'l Search Report EP 06020584.6 dated Jan. 12, 2007.
Int'l Search Report EP 06020583.8 dated Jan. 30, 2007.
Int'l Search Report EP 06020756.0 dated Feb. 5, 2007.
Int'l Search Report EP 06024123.9 dated Feb. 26, 2007.
Int'l Search Report EP 04 752343.6 dated Jul. 20, 2007.
Int'l Search Report EP 06 024122.1 dated Mar. 19, 2007.
Int'l Search Report 07 001480.8 dated Apr. 12, 2007.
Int'l Search Report EP 07 001488.1 dated May 29, 2007.
Int'l Search Report—Extended EP 07 009029.5 dated Jul. 12, 2007.
Int'l Search Report EP 07 009321.6 dated Aug. 17, 2007.

* cited by examiner

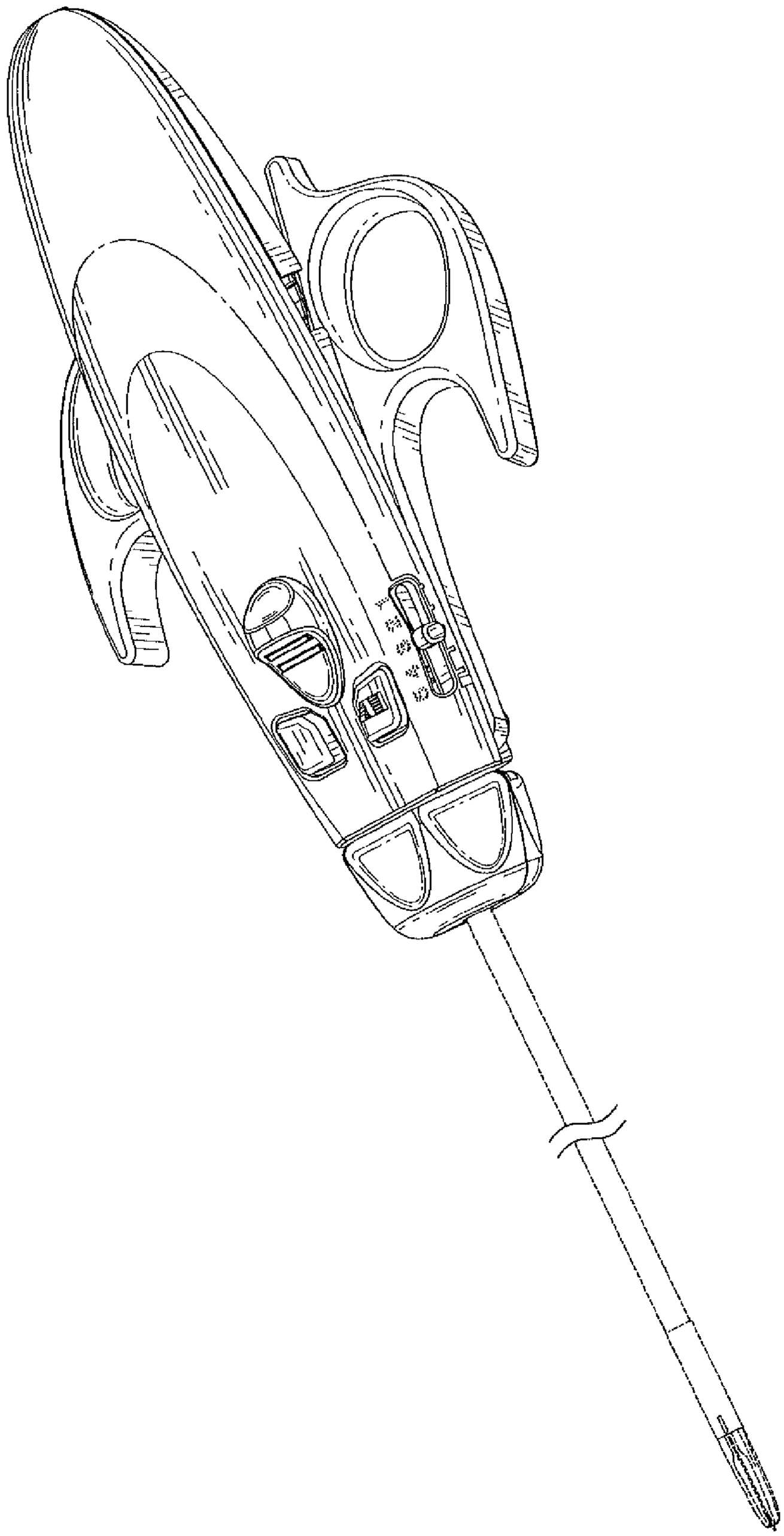

FIG. 1

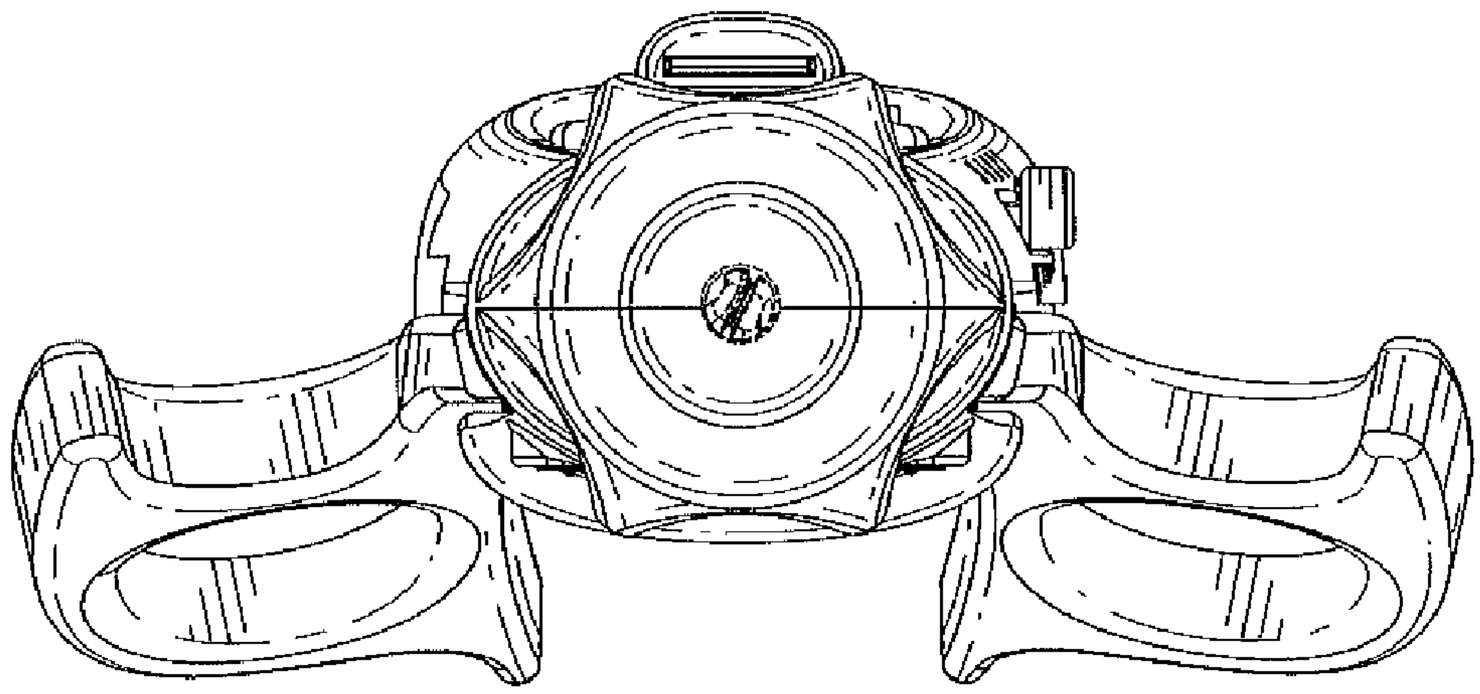

FIG. 2

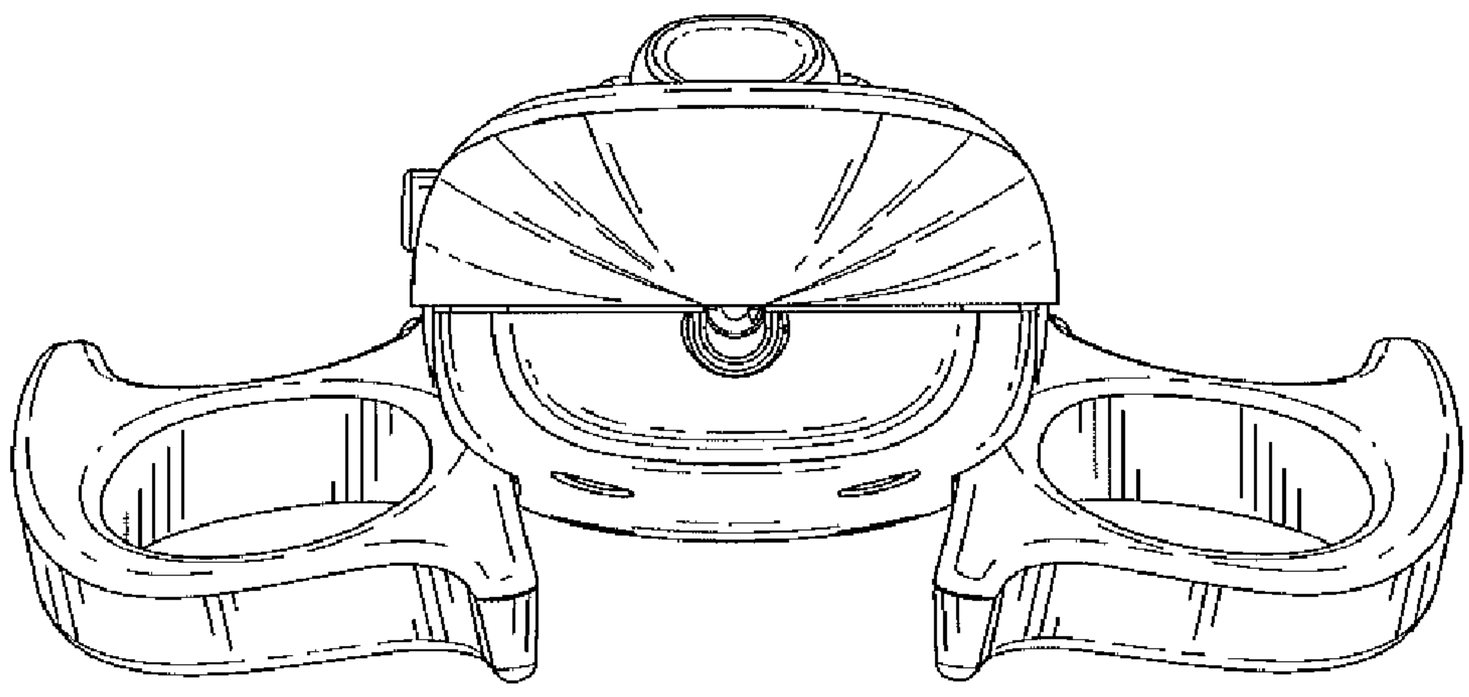

FIG. 3

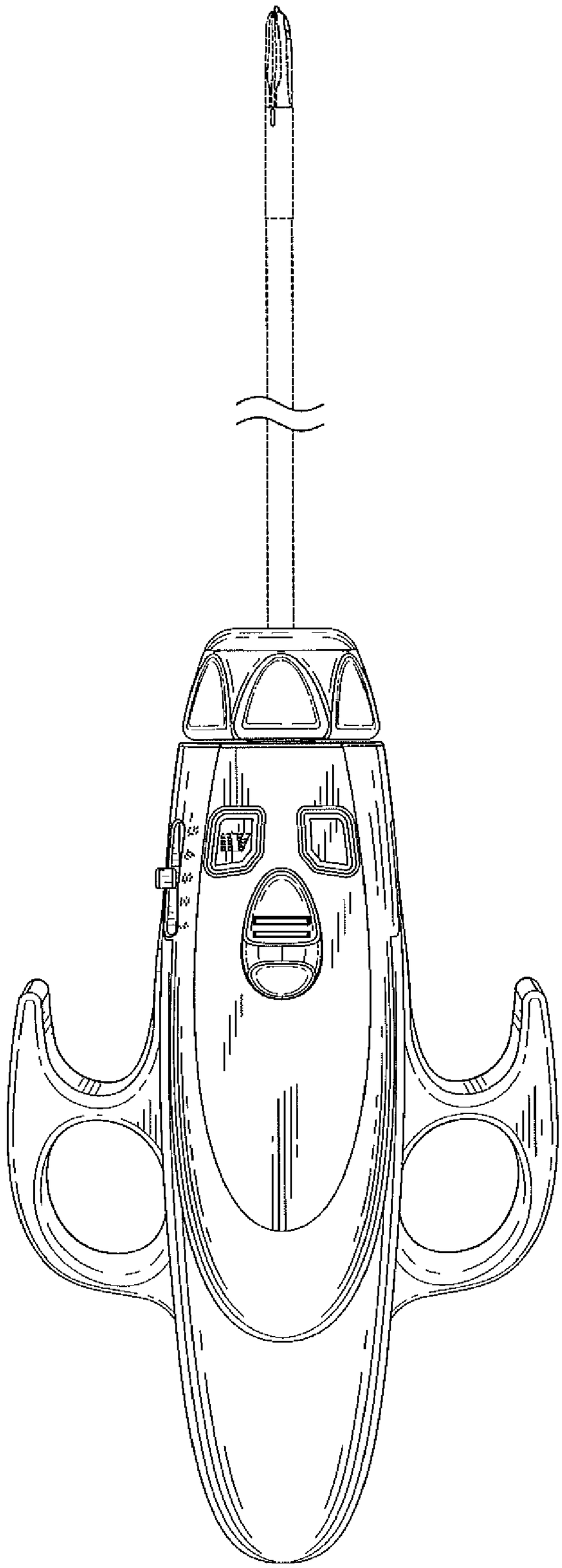

FIG. 4

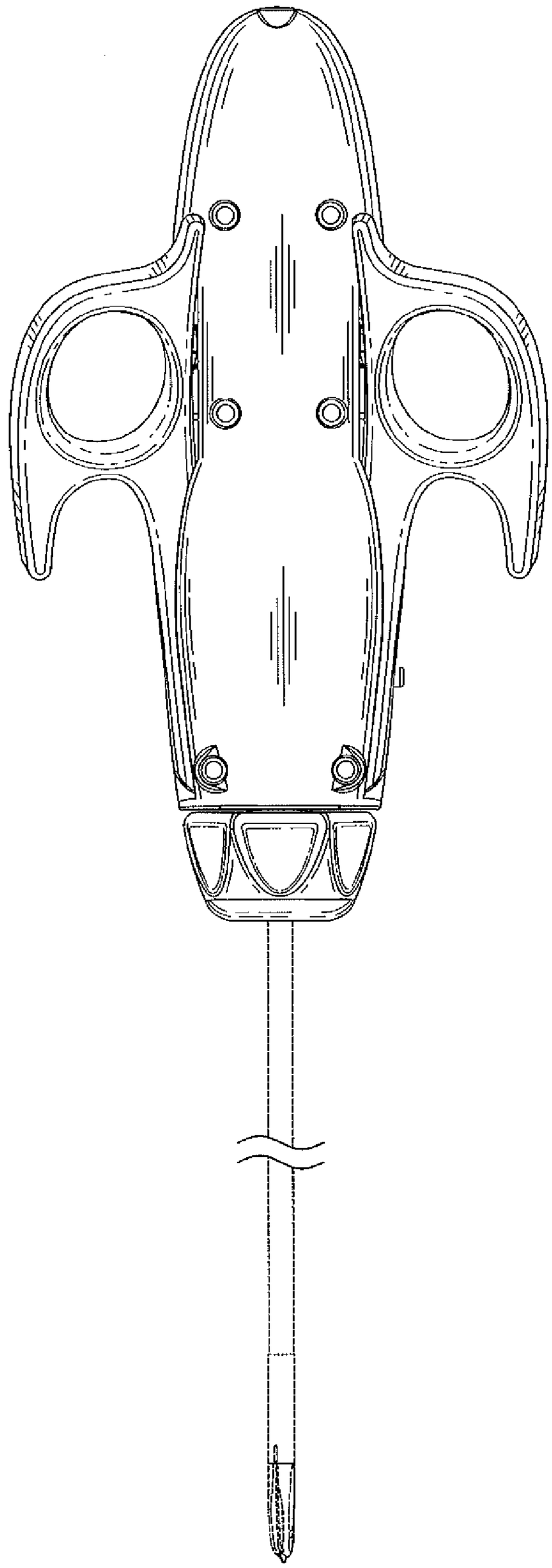

FIG. 5

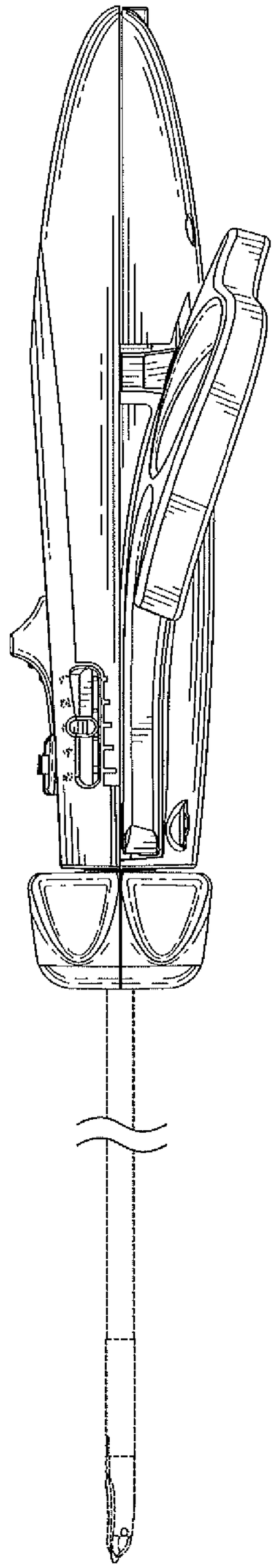

FIG. 6

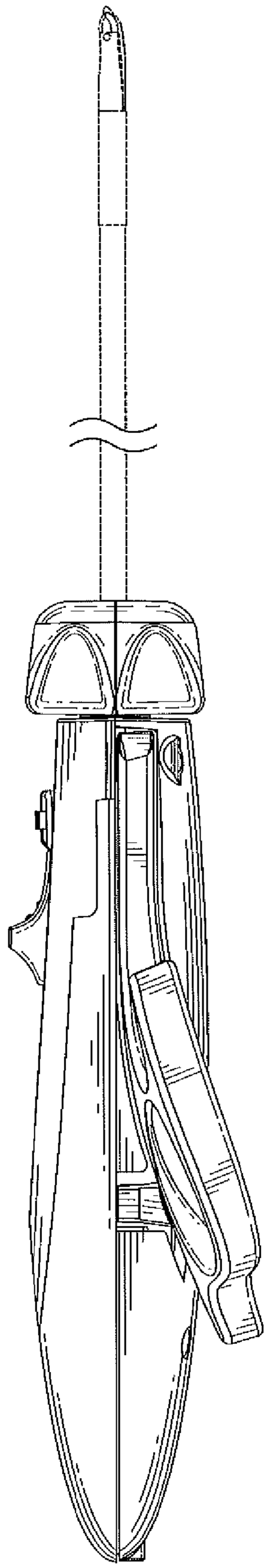

FIG. 7