US00D574314S

(12) United States Design Patent

Kato et al.

(10) Patent No.: US D574,314 S
(45) Date of Patent: ** Aug. 5, 2008

(54) **WATER SCOOTER**

(75) Inventors: **Takaaki Kato**, Saitama-ken (JP); **Akira Omae**, Saitama-ken (JP)

(73) Assignee: **Honda Motor Co., Ltd.**, Tokyo (JP)

(**) Term: **14 Years**

(21) Appl. No.: **29/282,820**

(22) Filed: **Jul. 30, 2007**

(30) **Foreign Application Priority Data**

Jan. 31, 2007 (JP) 2007-002059

(51) **LOC (8) Cl.** **12-06**
(52) **U.S. Cl.** **D12/307**; D12/317
(58) **Field of Classification Search** D12/300, D12/307, 317; 114/55.5, 55.51–55.58
See application file for complete search history.

(56) **References Cited**

U.S. PATENT DOCUMENTS

D444,761	S		7/2001	Momoi et al.	
D464,926	S		10/2002	Mizuta et al.	
D464,928	S	*	10/2002	Bucaccio et al.	D12/307
D465,192	S	*	11/2002	Bucaccio et al.	D12/307
D485,226	S	*	1/2004	Cassell	D12/317
D487,718	S	*	3/2004	Bills et al.	D12/317
D488,119	S	*	4/2004	Cassell	D12/317
D492,638	S	*	7/2004	Cassell	D12/317
D501,820	S	*	2/2005	Bucaccio et al.	D12/317
D507,230	S	*	7/2005	Bucaccio et al.	D12/317
D508,454	S	*	8/2005	Ino et al.	D12/317
D513,225	S		12/2005	Omae et al.	
7,028,628	B2	*	4/2006	Tsumiyama et al.	114/55.5

* cited by examiner

Primary Examiner—Holly H. Baynham
Assistant Examiner—Cynthia M. Chin
(74) *Attorney, Agent, or Firm*—Westerman, Hattori, Daniels & Adrian, LLP.

(57) **CLAIM**

The ornamental design for a water scooter, as shown and described.

DESCRIPTION

FIG. **1** is a left, front perspective view of a water scooter;

FIG. **2** is a right, front perspective view thereof;

FIG. **3** is a left side elevation view thereof;

FIG. **4** is a right side elevation view thereof;

FIG. **5** is a top plan view thereof;

FIG. **6** is a bottom plan view thereof;

FIG. **7** is a front elevation view thereof; and,

FIG. **8** is a rear elevation view thereof.

The portion of the article shown in broken lines is for illustrative purpose only and forms no part of the claimed design.

1 Claim, 8 Drawing Sheets

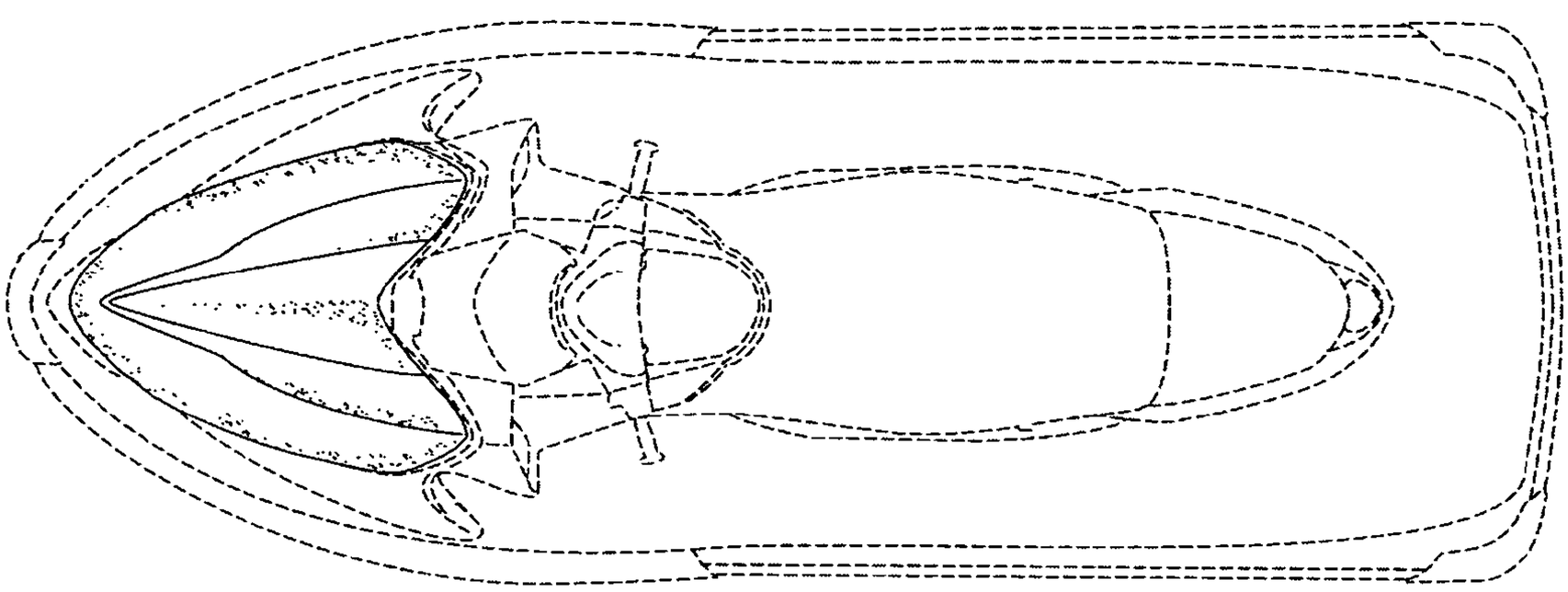

FIG. 1

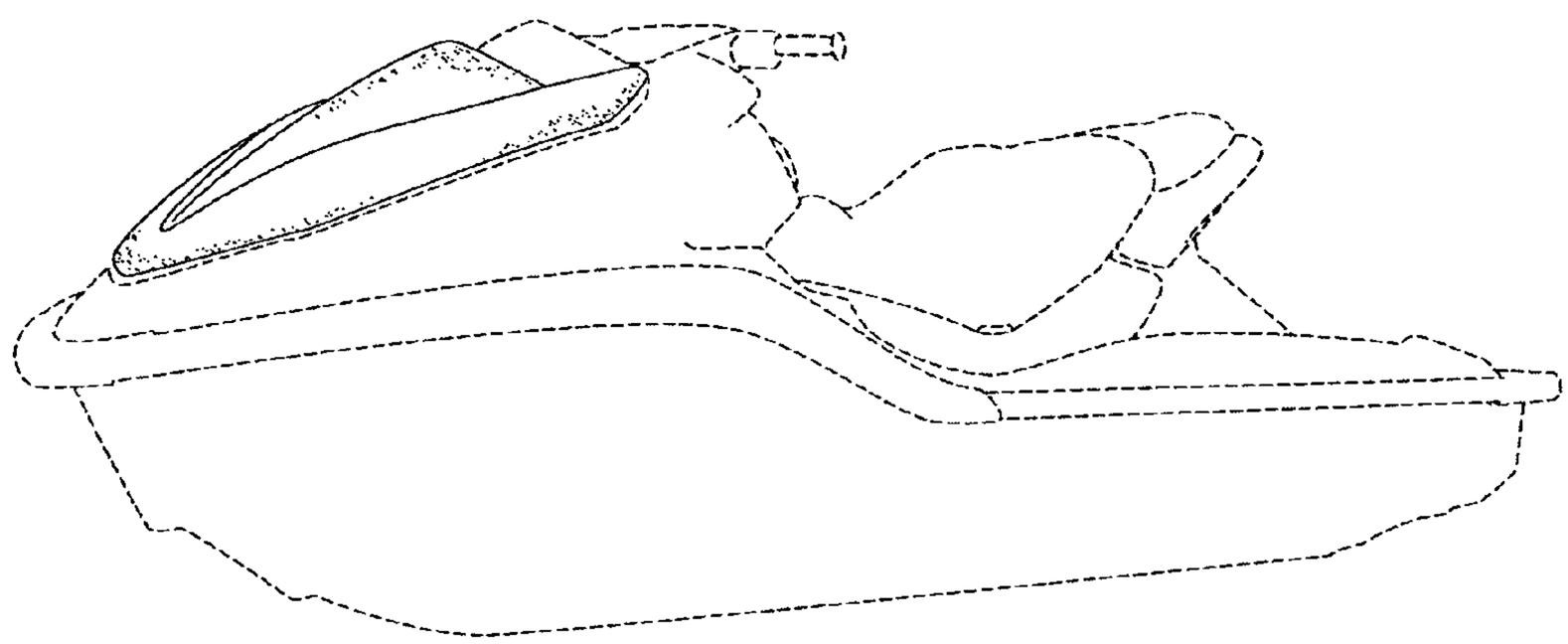

FIG. 2

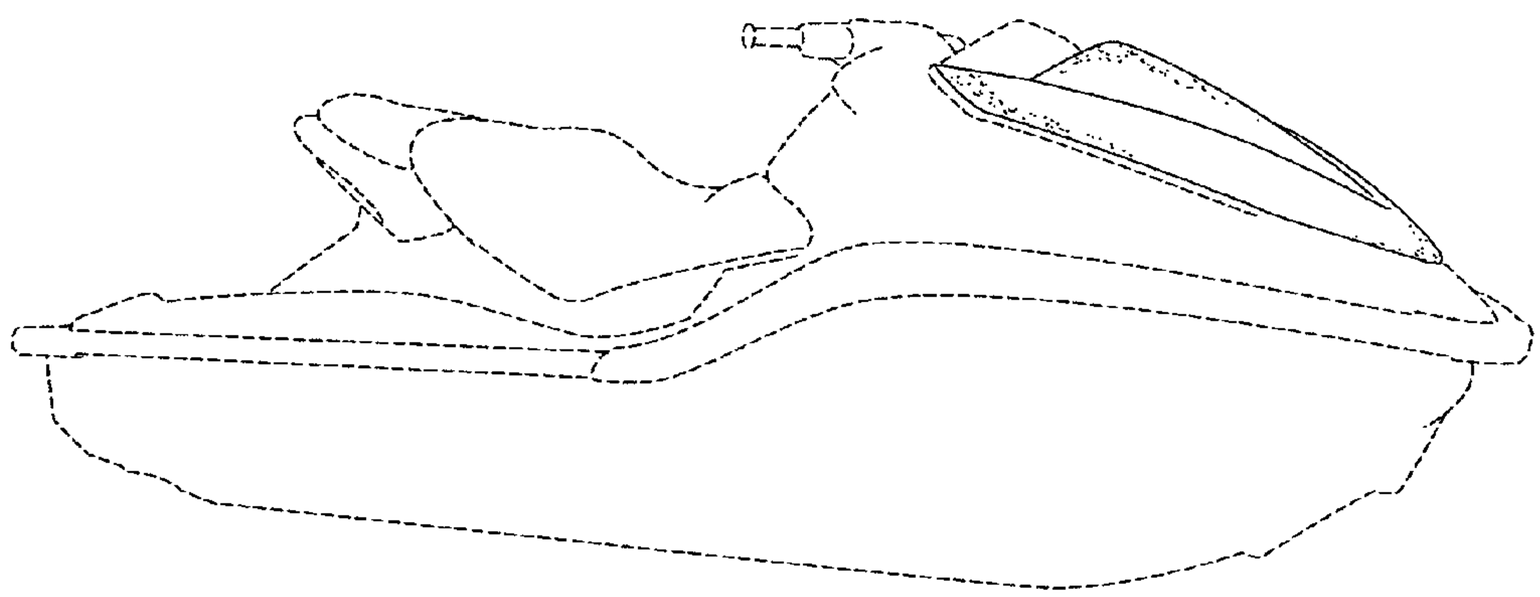

FIG. 3

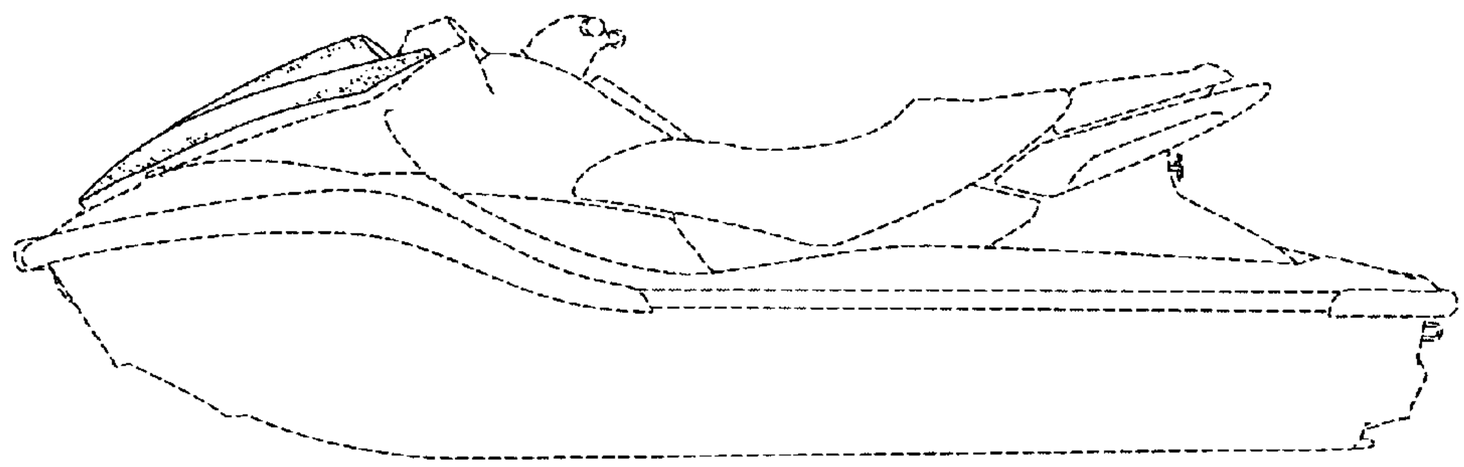

FIG. 4

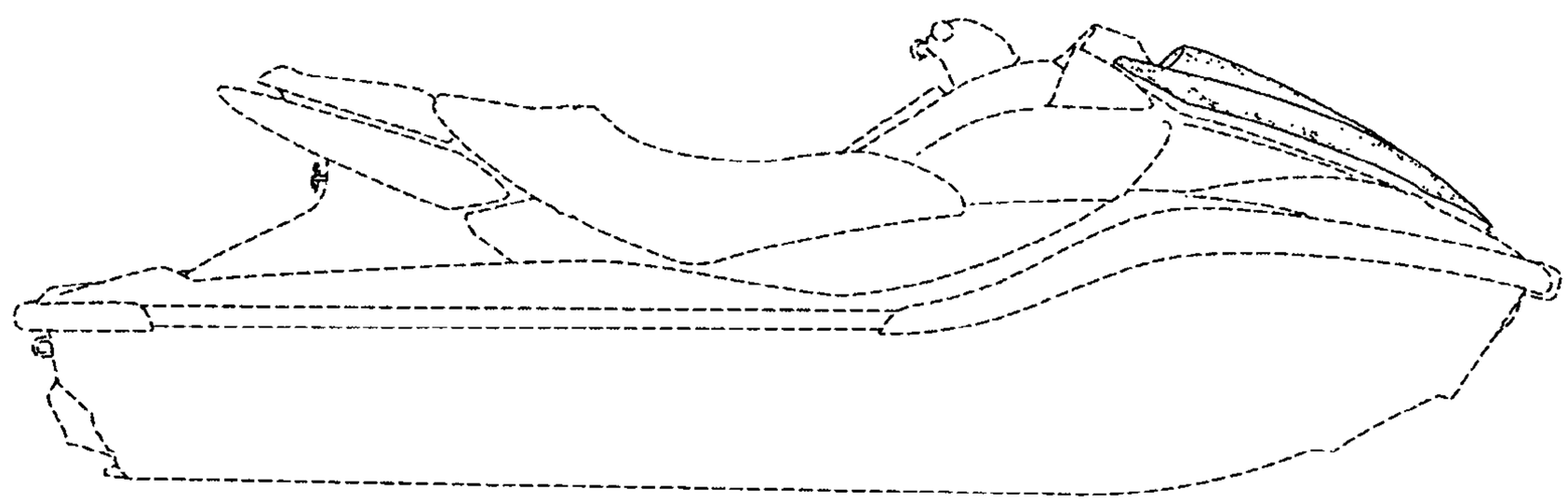

FIG. 5

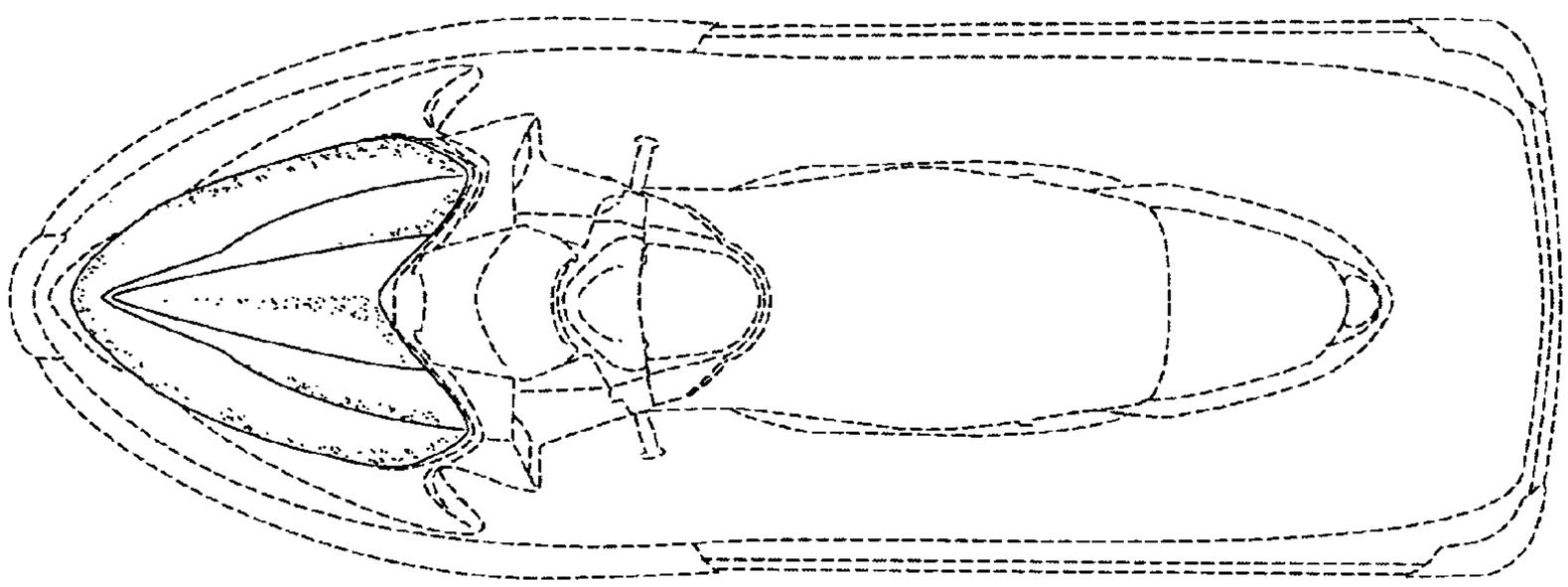

FIG. 6

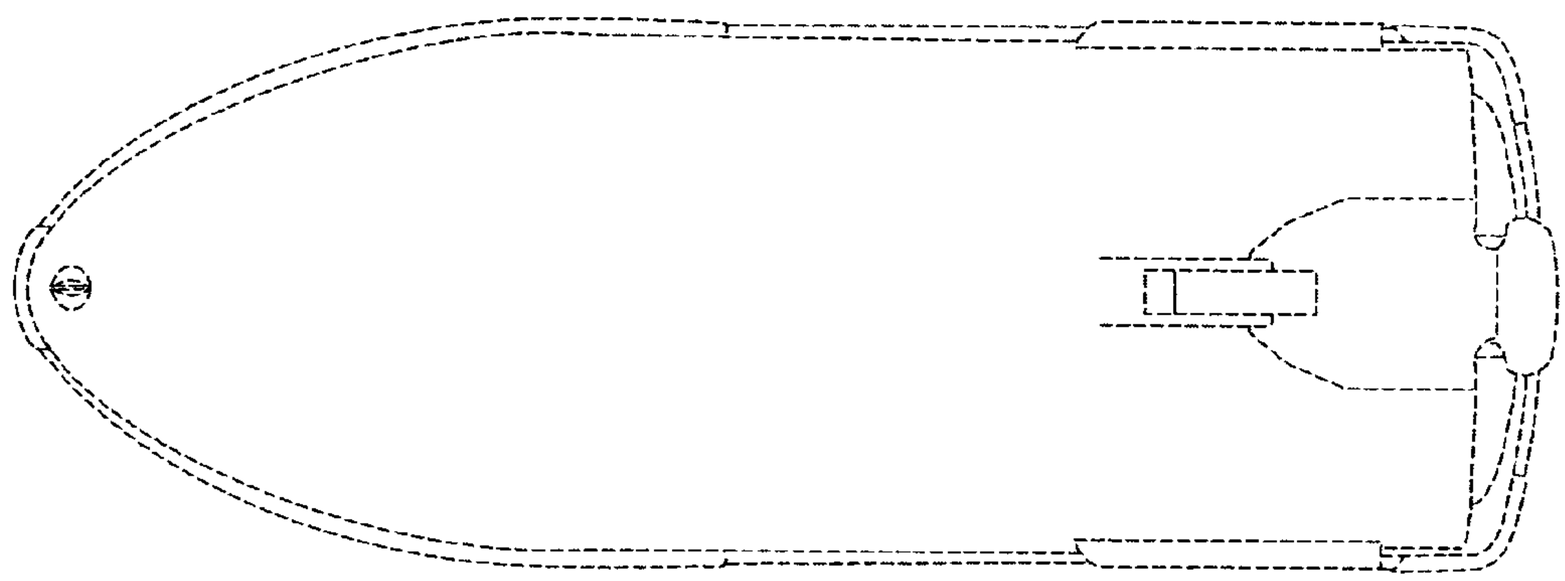

FIG. 7

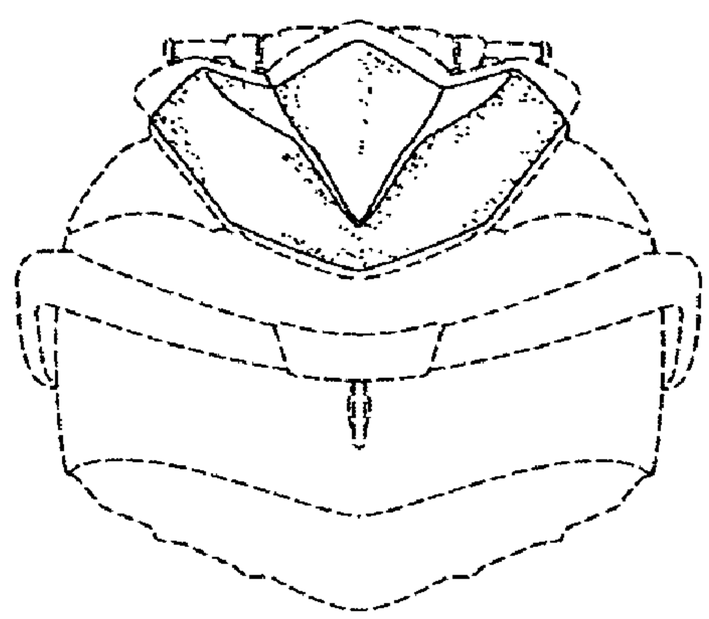
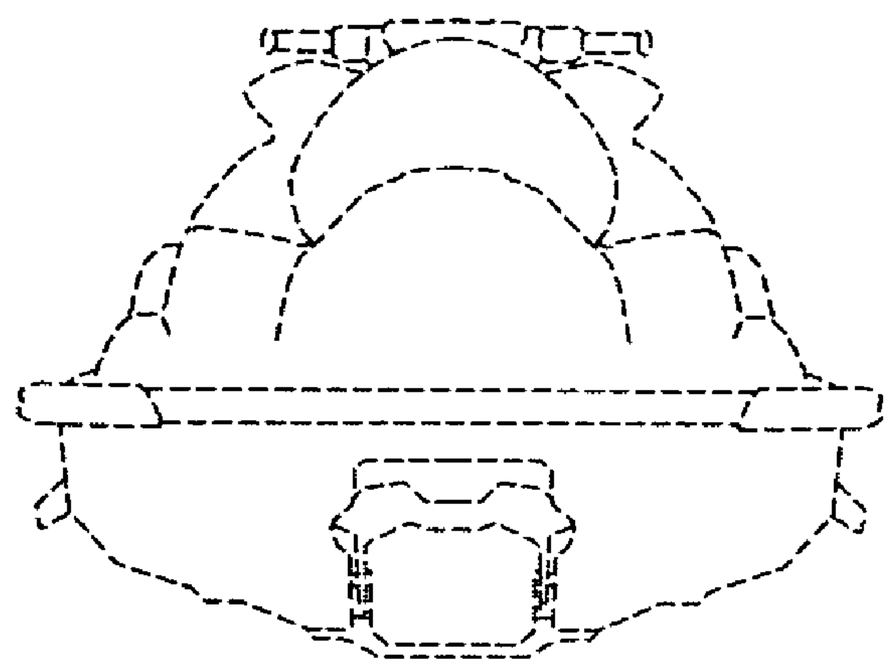
FIG. 8