US00D572374S

(12) United States Design Patent

Gibbs

(10) Patent No.: US D572,374 S
(45) Date of Patent: ** Jul. 1, 2008

(54) **CABLE-REINFORCED BOLLARD FENCE**

(76) Inventor: **Edward L. Gibbs**, 1555 N. Mingo Rd., Tulsa, OK (US) 74116

(**) Term: **14 Years**

(21) Appl. No.: **29/283,628**

(22) Filed: **Aug. 20, 2007**

Related U.S. Application Data

(63) Continuation of application No. 10/764,788, filed on Jan. 26, 2004.

(51) **LOC (8) Cl.** **25-01**
(52) **U.S. Cl.** **D25/119**; D25/42
(58) **Field of Classification Search** ..... D25/38, D25/42, 43, 119; 256/19, 22, 65.01, 65.14, 256/65.11, 65.02, DIG. 5, 33, 34, 51, 13.1; 52/301, 720.1, 745.17
See application file for complete search history.

(56) **References Cited**

U.S. PATENT DOCUMENTS

16,419 A 1/1857 Wickersham

(Continued)

FOREIGN PATENT DOCUMENTS

DE 1684650 10/1969

(Continued)

OTHER PUBLICATIONS

Ameristar Fence Products, Inc., "Aegis Ornamental Steel Residential Fencing," pp. 1-8, published in the United States no later than Apr. 2001.

(Continued)

Primary Examiner—Doris Clark

(74) *Attorney, Agent, or Firm*—Gary Peterson

(57) **CLAIM**

The ornamental design for a cable-reinforced bollard fence, as shown and described.

DESCRIPTION

FIG. **1** is a front elevational view of a cable-reinforced bollard fence; each panel is broken away to indicate indeterminate length. The front, rear, and plan views are identical to those views illustrated in FIGS. **3**, **4**, and **5**. The left and right end views are identical to the end view shown in FIG. **2**.

FIG. **2** is an enlarged right-hand side view of the fence shown in FIG. **1**. The right-hand side view of the fence is a mirror image. The slots and apertures shown in broken lines are for illustrative purposes only, and form no part of the claimed design.

FIG. **3** is am enlarged front elevational view of a section of the fence shown in FIG. **1**, depicting a bollard post, a panel formed from rails and pickets, and an intermediate post. Portions of the section are cut away, for convenience of illustration.

FIG. **4** is an enlarged rear elevational view of same section of the fence shown in FIG. **3**, depicting a bollard post, a panel formed from rails and pickets, and an intermediate post. Strengthening cables are shown installed within two of the rails. Portions of the section are cut away, for convenience of illustration.

FIG. **5** is an enlarged plan view of same section of the fence shown in FIG. **3**, depicting a bollard post, a panel formed from rails and pickets, and an intermediate post. Portions of the section are cut away, for convenience of illustration; and,

FIG. **6** is a front elevational view of a second embodiment of a cable-reinforced bollard fence; each panel is broken away to indicate indeterminate length. The front, rear, and plan views are identical to those views illustrated in FIGS. **3**, **4**, and **5**. The end views are identical to the end view shown in FIG. **2**.

1 Claim, 3 Drawing Sheets

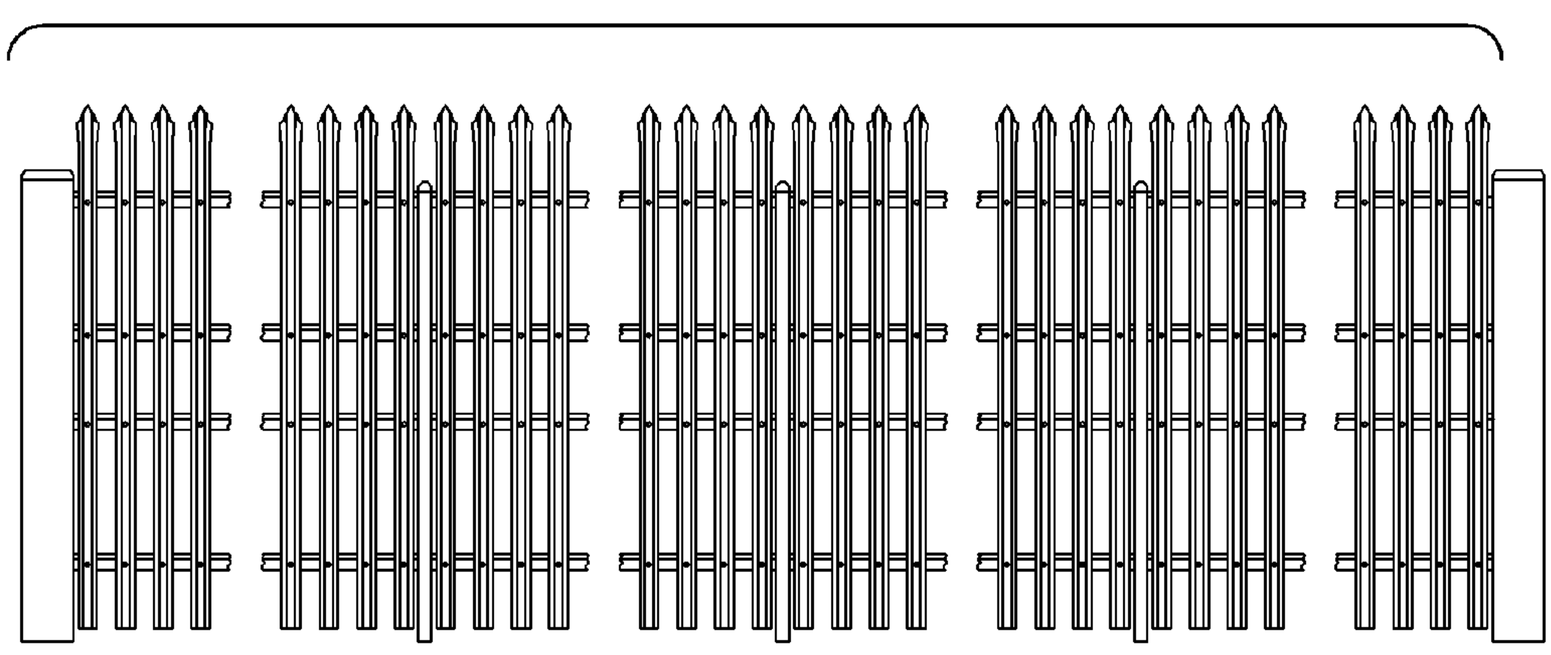

U.S. PATENT DOCUMENTS

383,343	A		5/1888	Coker
426,558	A		4/1890	Dithridge
910,950	A		1/1909	Noll
991,603	A		5/1911	Brooks
1,848,246	A		3/1932	Dowell
1,857,435	A		5/1932	Cole
2,251,967	A		8/1941	Yoder
D133,482	S	*	8/1942	MacKenzie D25/42
2,337,626	A		12/1943	Sawyer
2,520,313	A		8/1950	Harris
2,669,434	A		2/1954	White
2,907,552	A		10/1959	Crone
2,919,113	A		12/1959	Cofield
3,185,445	A		5/1965	Broadway
3,305,221	A		2/1967	Kling
3,307,833	A		3/1967	Muller et al.
3,342,007	A		9/1967	Merson
3,370,836	A		2/1968	Ashworth et al.
3,390,865	A		7/1968	Jeho
3,397,866	A		8/1968	Hockett
3,698,224	A		10/1972	Saytes
3,892,387	A	*	7/1975	Mann 256/24
3,893,271	A		7/1975	Kotlarz
3,902,703	A		9/1975	Bouye
4,044,513	A		8/1977	Deike
4,047,355	A		9/1977	Knorr
4,054,269	A		10/1977	Stabler
4,066,244	A		1/1978	Yoho
4,074,893	A	*	2/1978	Coltrin 256/21
4,075,473	A		2/1978	Winston
4,096,673	A		6/1978	Deike
4,146,212	A		3/1979	Lerner
4,183,505	A		1/1980	Maestri
4,246,737	A		1/1981	Eiloart et al.
4,289,302	A		9/1981	Montgomery
4,369,953	A		1/1983	Greiner et al.
4,455,806	A		6/1984	Rice
4,501,411	A		2/1985	Otaki
4,609,185	A		9/1986	Prater et al.
4,723,759	A	*	2/1988	Patrick 256/22
4,819,916	A		4/1989	Wun-chung
4,858,383	A		8/1989	Kendig
4,887,691	A		12/1989	Rotondo
4,896,864	A		1/1990	Nusbaum
4,920,331	A		4/1990	Ver Loren van Themaat et al.
4,928,928	A		5/1990	Buth et al.
4,979,817	A		12/1990	Crisp, Sr.
5,039,066	A		8/1991	Stacey
5,136,813	A		8/1992	Gibbs et al.
5,272,838	A		12/1993	Gibbs
5,275,382	A		1/1994	Charbaut et al.
5,345,723	A		9/1994	Gibbs
5,415,380	A	*	5/1995	Sharp 256/24
5,443,244	A		8/1995	Gibbs
5,613,664	A	*	3/1997	Svalbe 256/19
5,675,943	A		10/1997	Southworth
5,685,665	A		11/1997	Lembo
5,860,636	A		1/1999	Duncan et al.
5,944,443	A		8/1999	Benedict
5,971,365	A		10/1999	Pigott et al.
6,061,991	A		5/2000	Dahl
6,065,738	A		5/2000	Pearce et al.
6,141,926	A		11/2000	Rossiter et al.
6,176,043	B1		1/2001	Gibbs
6,190,085	B1		2/2001	Johansson
6,226,849	B1		5/2001	Beck et al.
6,254,064	B1		7/2001	Gibbs
D465,856	S		11/2002	Givens et al.
D466,620	S		12/2002	Givens et al.
D467,669	S		12/2002	Givens et al.
D468,028	S		12/2002	Givens et al.
6,545,246	B2		4/2003	Kummle
6,588,733	B1		7/2003	Tremeer et al.
D479,004	S	*	8/2003	Perkins et al. D25/119
D479,883	S	*	9/2003	Gresham et al. D25/58
6,672,569	B2		1/2004	Deeley
6,684,477	B2		2/2004	Crissey
6,811,144	B2		11/2004	Denman et al.
6,811,145	B2		11/2004	Gibbs et al.
6,848,230	B2		2/2005	Kopish
6,863,264	B2		3/2005	Johansson et al.
6,874,765	B2		4/2005	Deeley
6,874,767	B1		4/2005	Gibbs
6,932,327	B2		8/2005	Alberson et al.
6,962,328	B2		11/2005	Bergendahl
6,969,051	B1		11/2005	Gibbs
7,071,439	B2		7/2006	Gibbs et al.
7,188,826	B1		3/2007	Gibbs
2002/0185639	A1		12/2002	Galivan
2003/0164487	A1		9/2003	Deeley
2003/0193047	A1		10/2003	Wiley
2003/0197163	A1		10/2003	Deeley
2005/0077507	A1		4/2005	Heimbecker et al.
2006/0017048	A1		1/2006	Alberson et al.
2006/0093430	A1		5/2006	Bergendahl et al.
2006/0145131	A1		7/2006	Purvis

FOREIGN PATENT DOCUMENTS

DE	1684647		12/1969
DE	1709153		7/1970
EP	172075	A1	2/1986
EP	282269	B1	1/1991
EP	443441	B1	3/1994
EP	935038	A1	8/1999
EP	949395	A2	10/1999
FR	704320		5/1931
FR	1539118		9/1968
FR	2372296	A1	6/1978
FR	2722820	A1	1/1996
GB	1232494	A1	5/1971
GB	1551154	A1	8/1979
GB	2249327	A1	6/1992
GB	2291081	A	1/1996
GB	2350846	A1	12/2000
GB	2363400	A1	12/2001
GB	02070838	A1	9/2002
GB	2372758	A1	9/2002
GB	2372759	A1	9/2002
GB	1103873	A1	4/2008
WO	9533113	A1	12/1995
WO	9703266	A1	1/1997

OTHER PUBLICATIONS

Ameristar Fence Products, Inc., "Aegis II Industrial & Aegis Plus Commercial Ornamental Steel Fence and TransPort Ornamental Gates," pp. 1-18, published in the United States in Aug. 2000.

Ameristar Fence Products, Inc., "Tired of the Threats?," pp. 1-12, published in the United States in Aug. 2002.

British Standards Institute, "BS 1722, Part 12, Specification for Steel Palisade Fences", published 1999, United Kingdom, all pages.

* cited by examiner

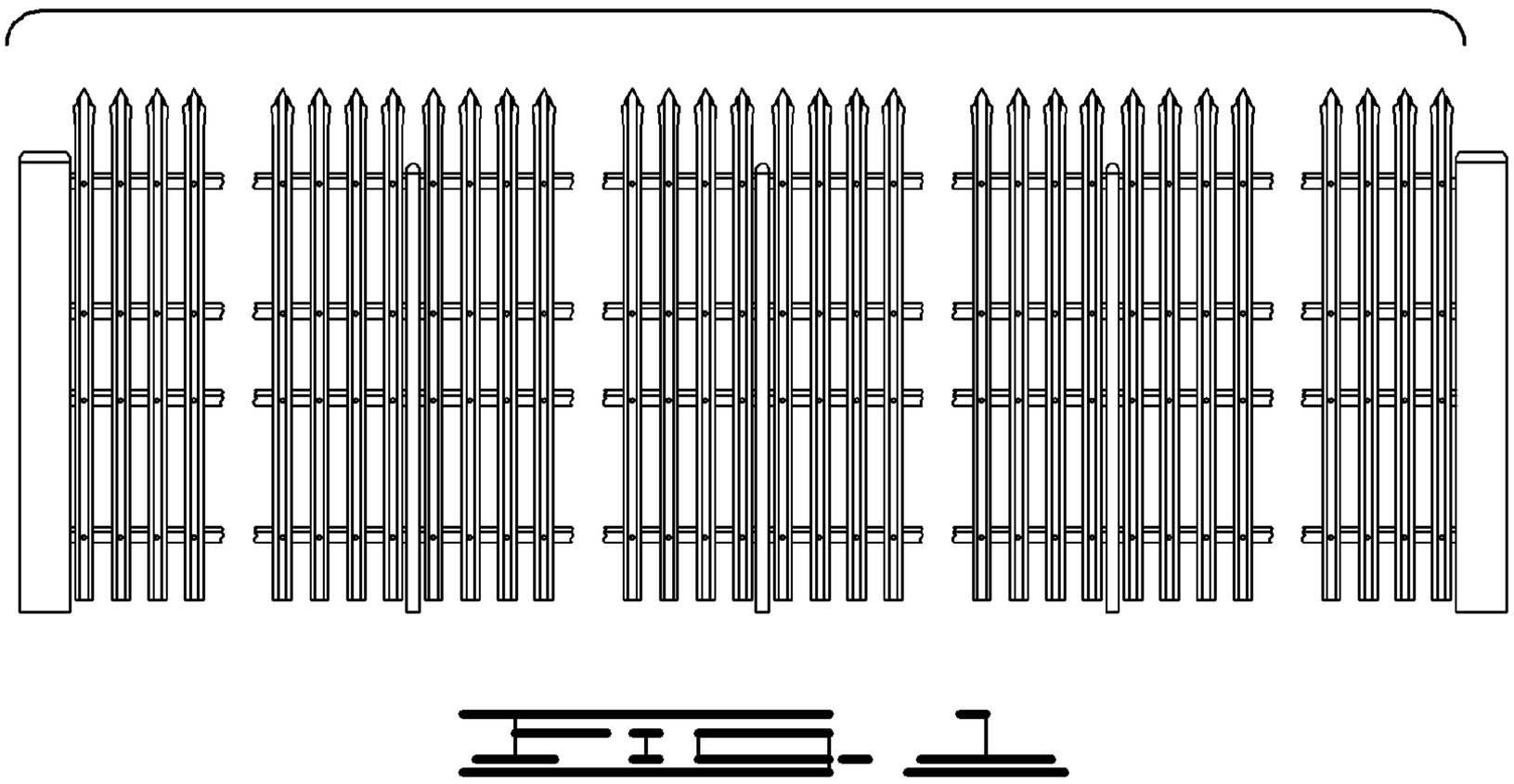

FIG. 1

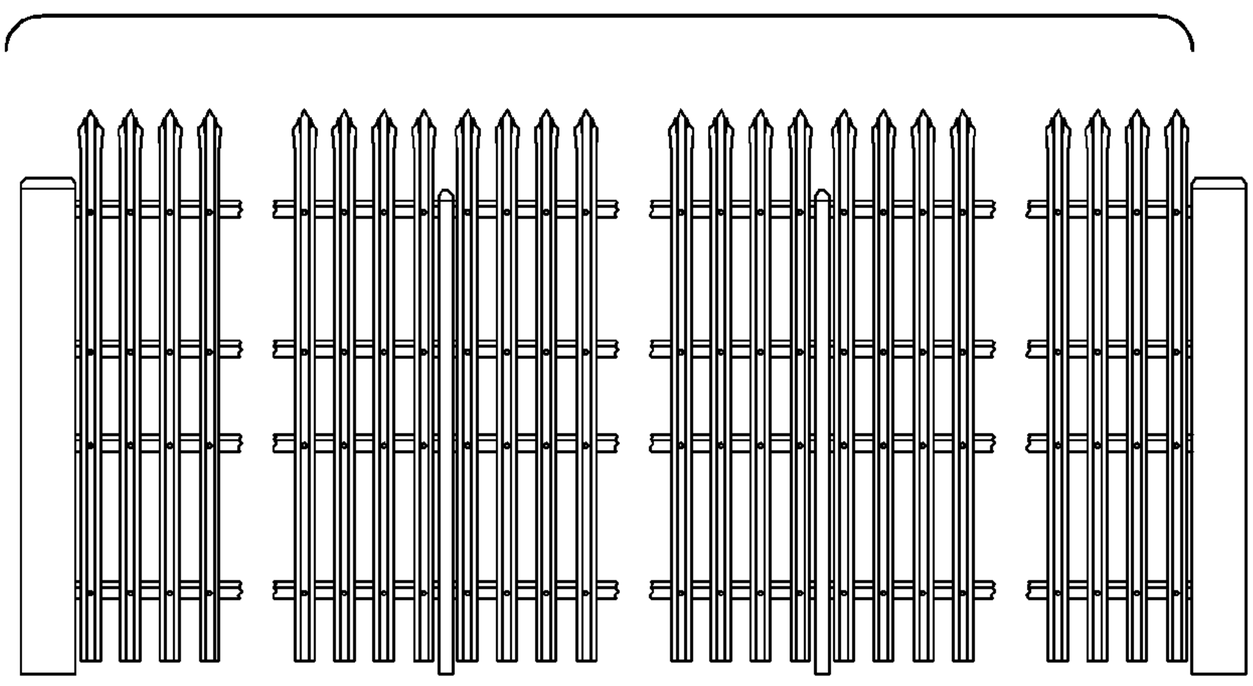

FIG. 2

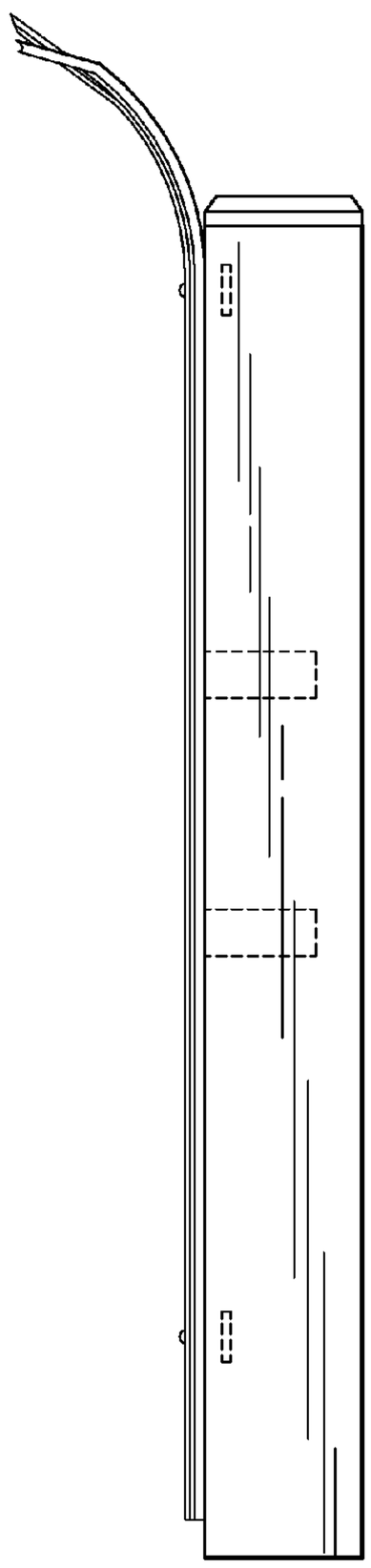

FIG. 2

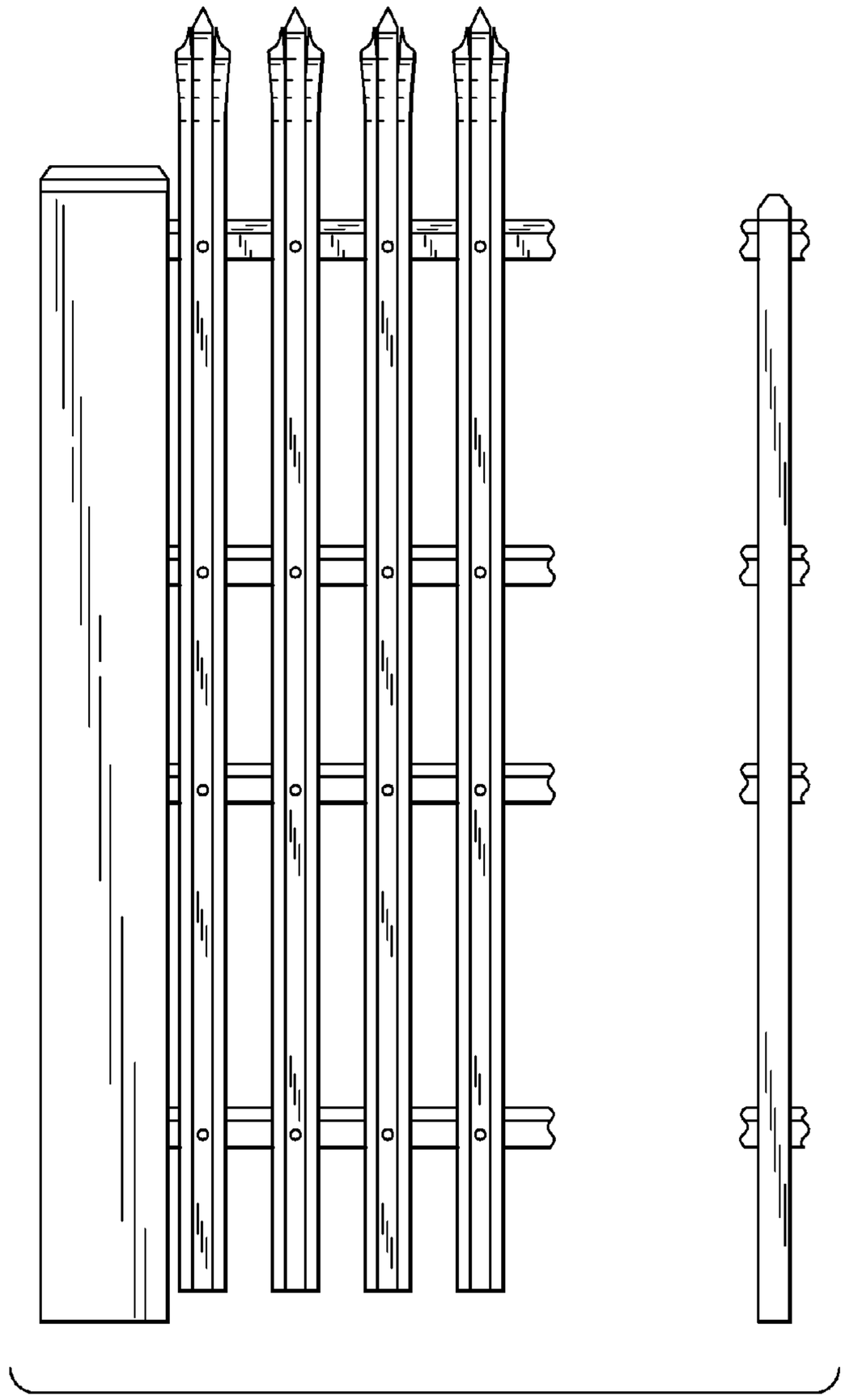

FIG. 3

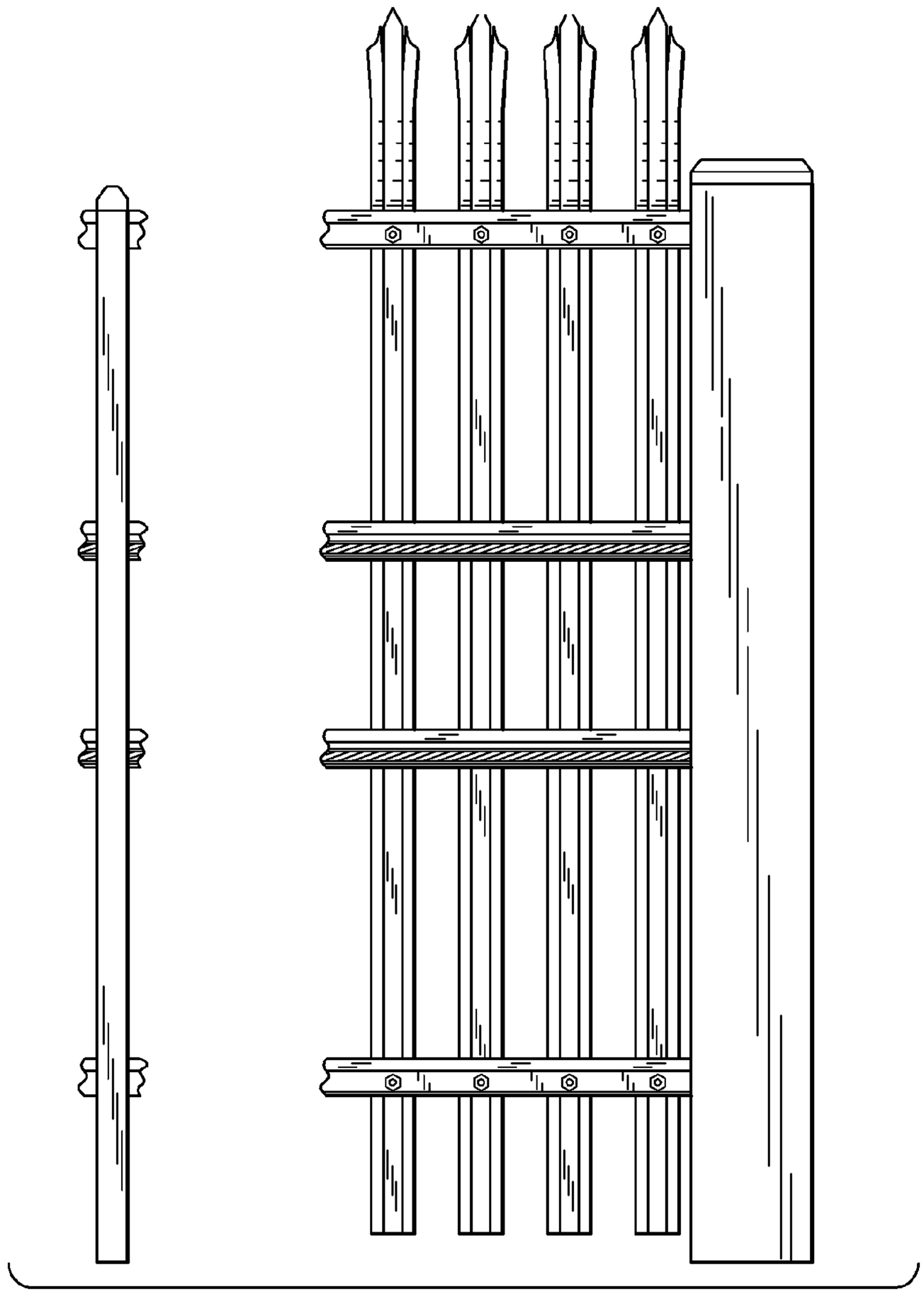

FIG. 4

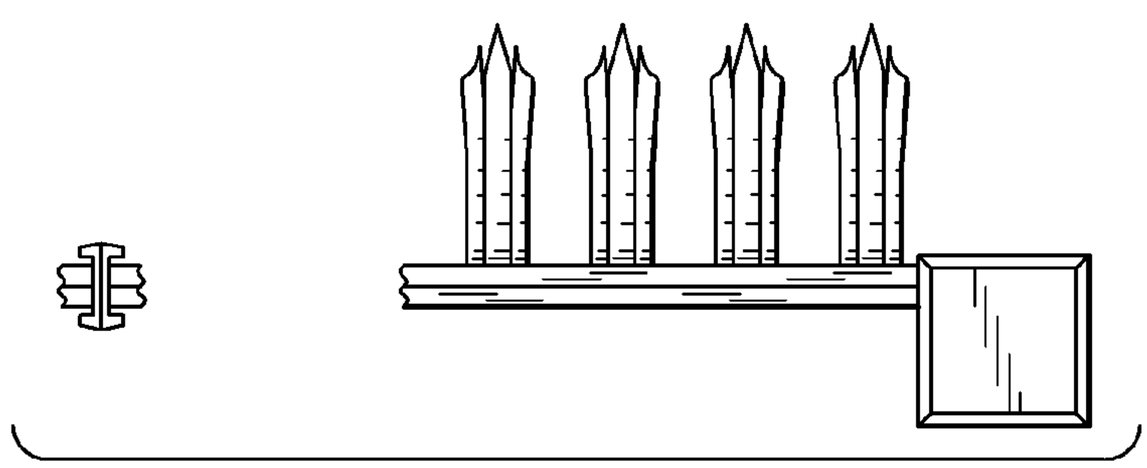

FIG. 5