US00D567444S

(12) United States Design Patent

Giannini

(10) Patent No.: US D567,444 S
(45) Date of Patent: ** Apr. 22, 2008

(54) **ELECTRIC CLIPPER HEAD**

(76) Inventor: **Beau Giannini**, 5/F, 4 Bldg, # 990 Chang Ping Rd, Shanghai (CN) 200042

(**) Term: **14 Years**

(21) Appl. No.: **29/273,959**

(22) Filed: **Mar. 16, 2007**

Related U.S. Application Data

(63) Continuation of application No. 29/237,352, filed on Aug. 30, 2005, now Pat. No. Des. 535,786.

(51) **LOC (8) Cl.** **28-03**
(52) **U.S. Cl.** **D28/54**
(58) **Field of Classification Search** 30/34.05, 30/34.1, 34.2, 43–43.92, 44, 45, 526, 527, 30/532, 200, 201, 196, 216, 210, 233; D28/44, D28/49–54
See application file for complete search history.

(56) **References Cited**

U.S. PATENT DOCUMENTS

D417,931 S * 12/1999 Lebherz D28/53
D432,265 S * 10/2000 Kling et al. D28/53
D435,694 S * 12/2000 Lebherz D28/53
D436,229 S * 1/2001 Eguchi et al. D28/53
D464,466 S * 10/2002 Rizzuto et al. D28/53
D466,650 S * 12/2002 Muller et al. D28/53
D514,255 S * 1/2006 Bokelman-Dumas D28/53
D519,243 S * 4/2006 Kling D28/51
D524,485 S * 7/2006 Izumi et al. D28/53
2003/0145469 A1* 8/2003 Ogawa et al. 30/210

* cited by examiner

Primary Examiner—Jennifer Rivard
(74) *Attorney, Agent, or Firm*—James E. Parris

(57) **CLAIM**

I claim the ornamental design for an electric clipper head, as shown and described.

DESCRIPTION

FIG. **1** is a front perspective view showing the design;
FIG. **2** is a rear perspective view thereof;
FIG. **3** is a top plan view thereof;
FIG. **4** is a bottom plan view thereof;
FIG. **5** is a left elevation view thereof;
FIG. **6** is a right elevation view thereof;
FIG. **7** is a front elevation view thereof; and,
FIG. **8** is a rear elevation view thereof.

The labeling "Medline" forming part of the claimed design is a registered trademark of the Medline Industries, Inc.

1 Claim, 5 Drawing Sheets

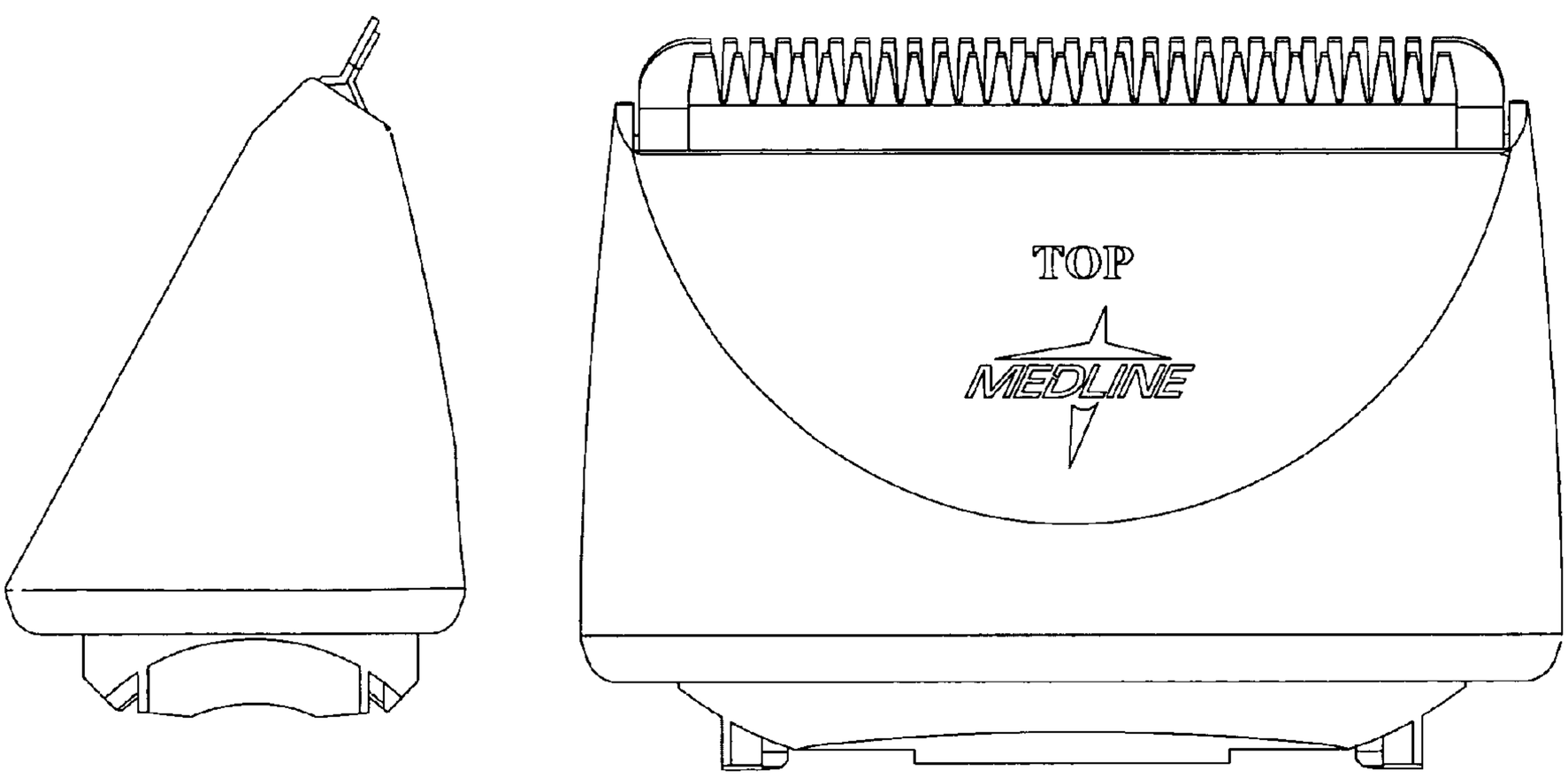

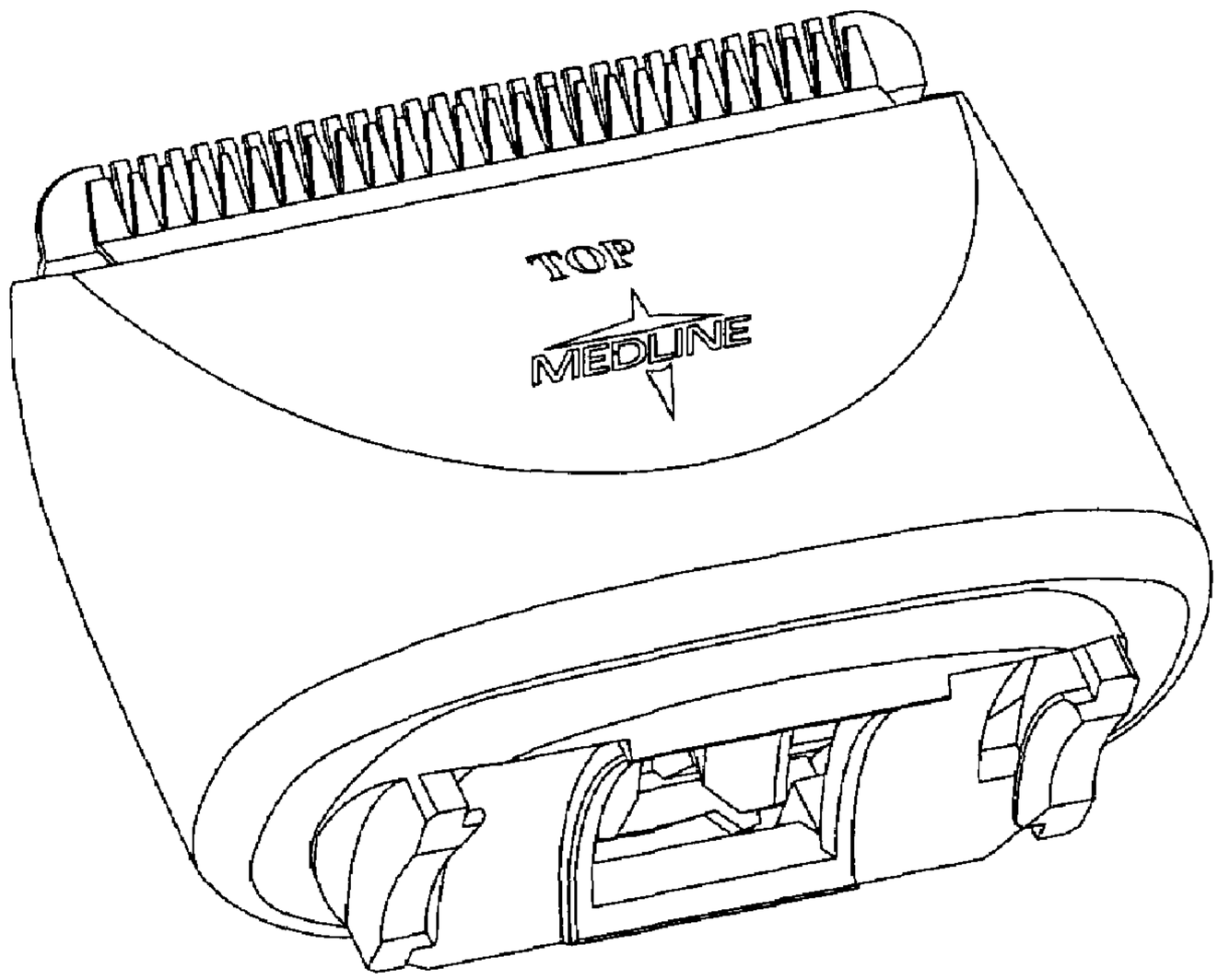

FIG. 1

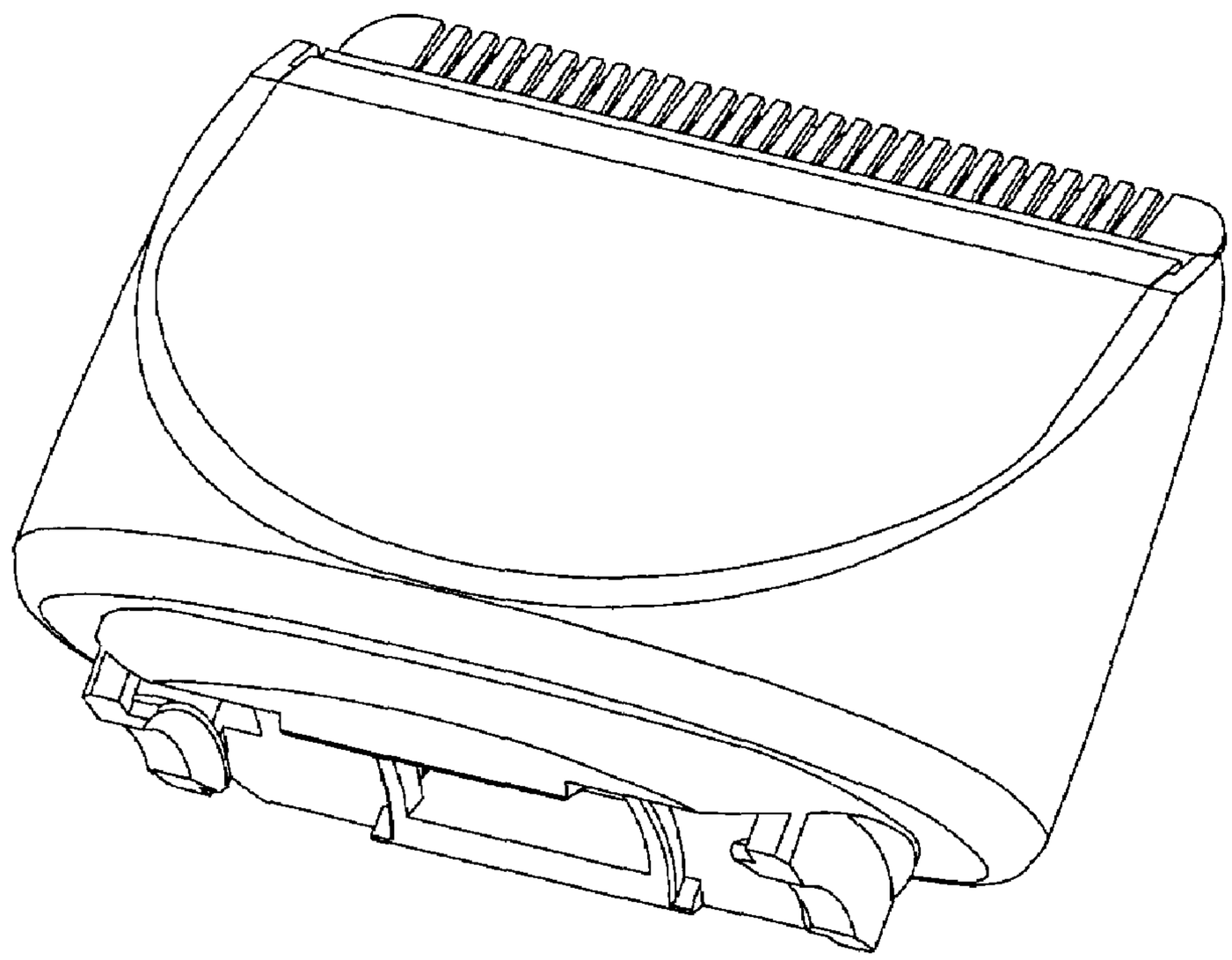

FIG. 2

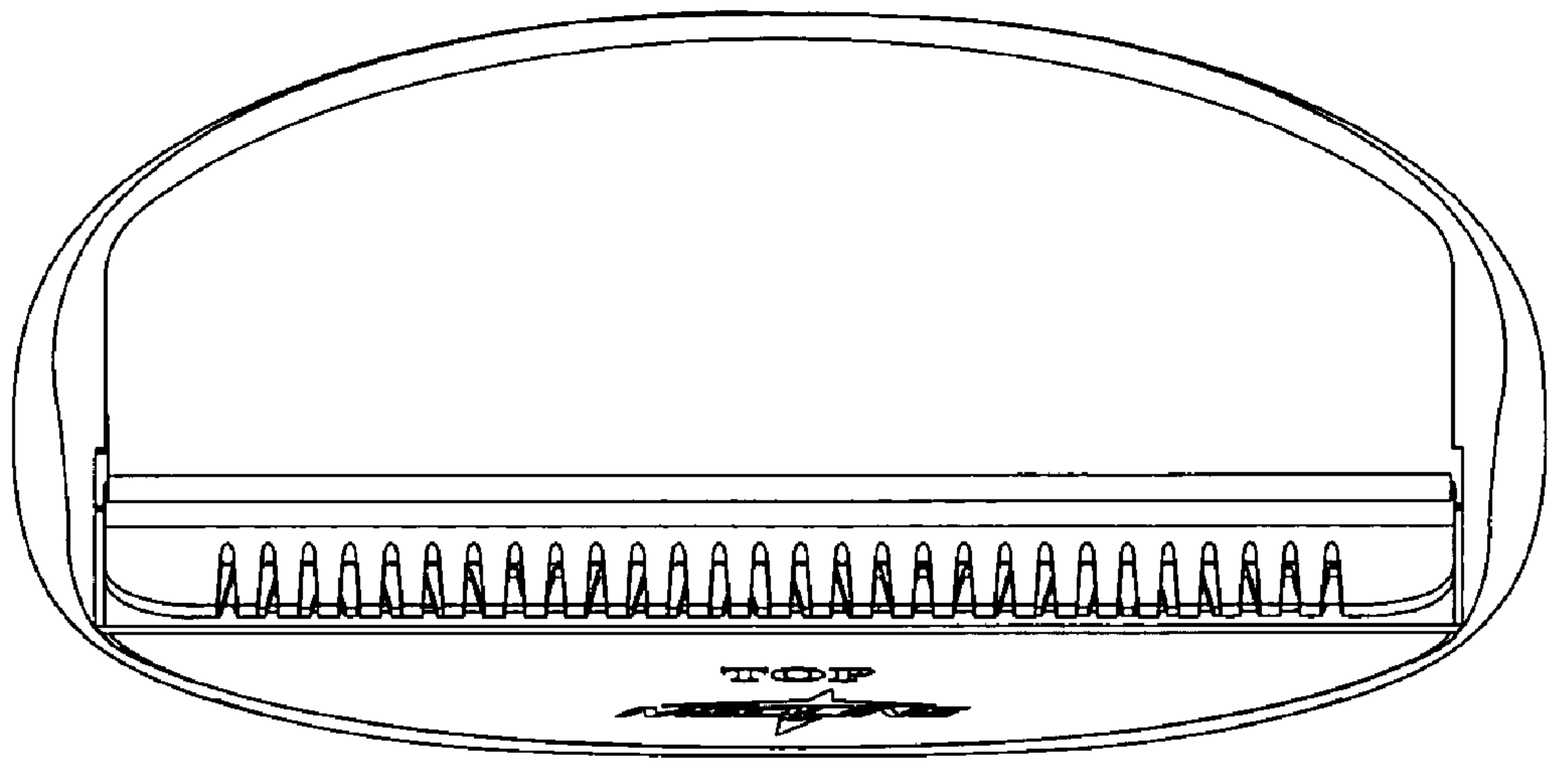

FIG. 3

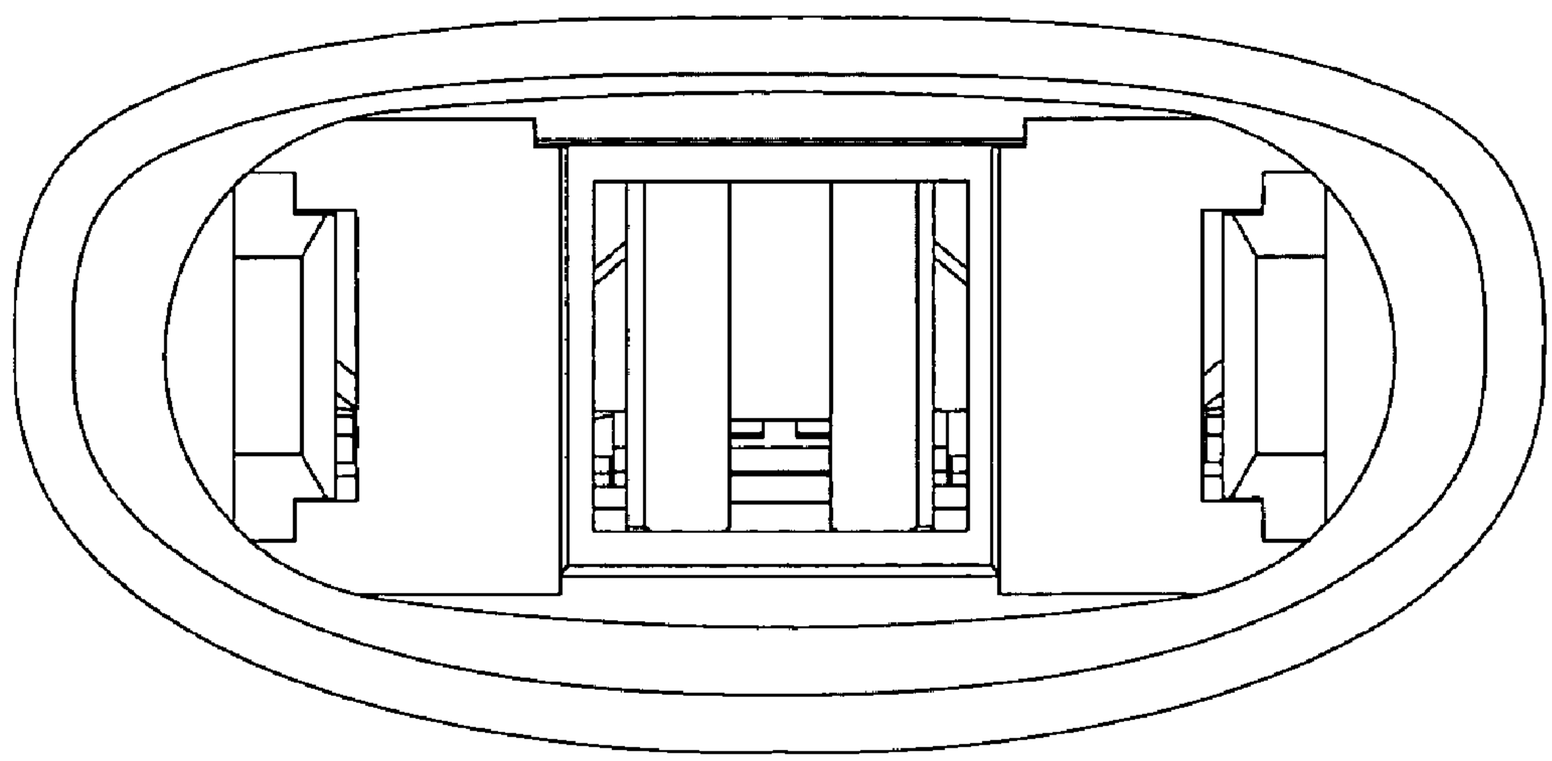

FIG. 4

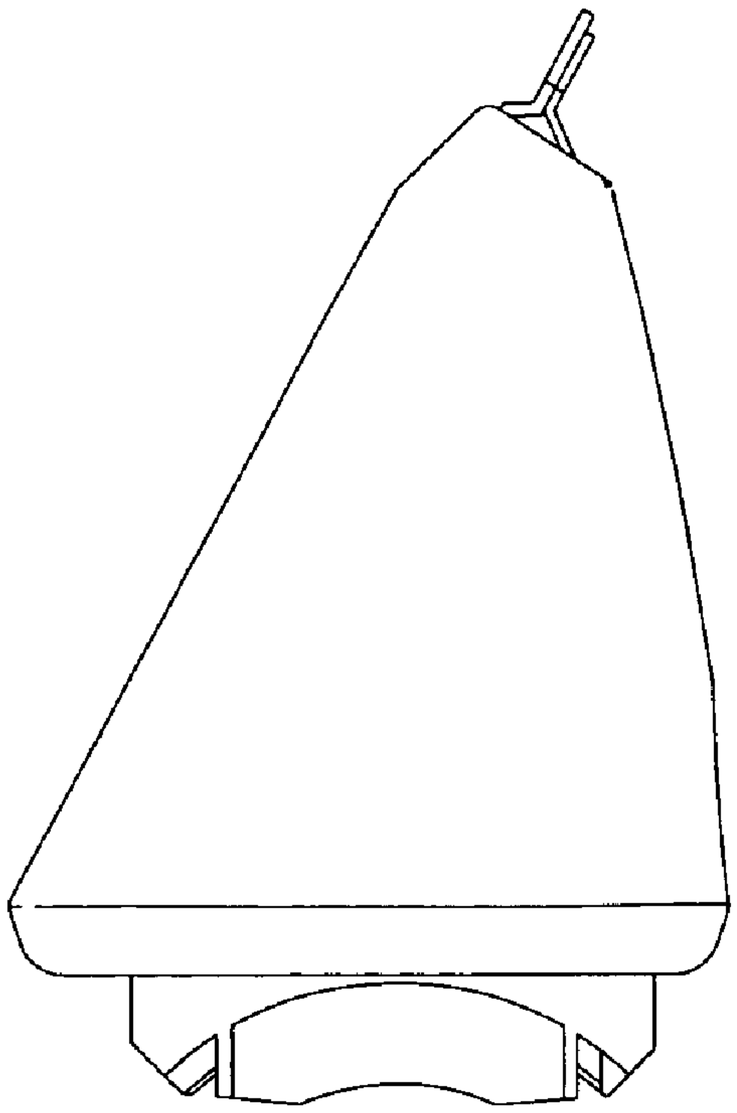

FIG. 5

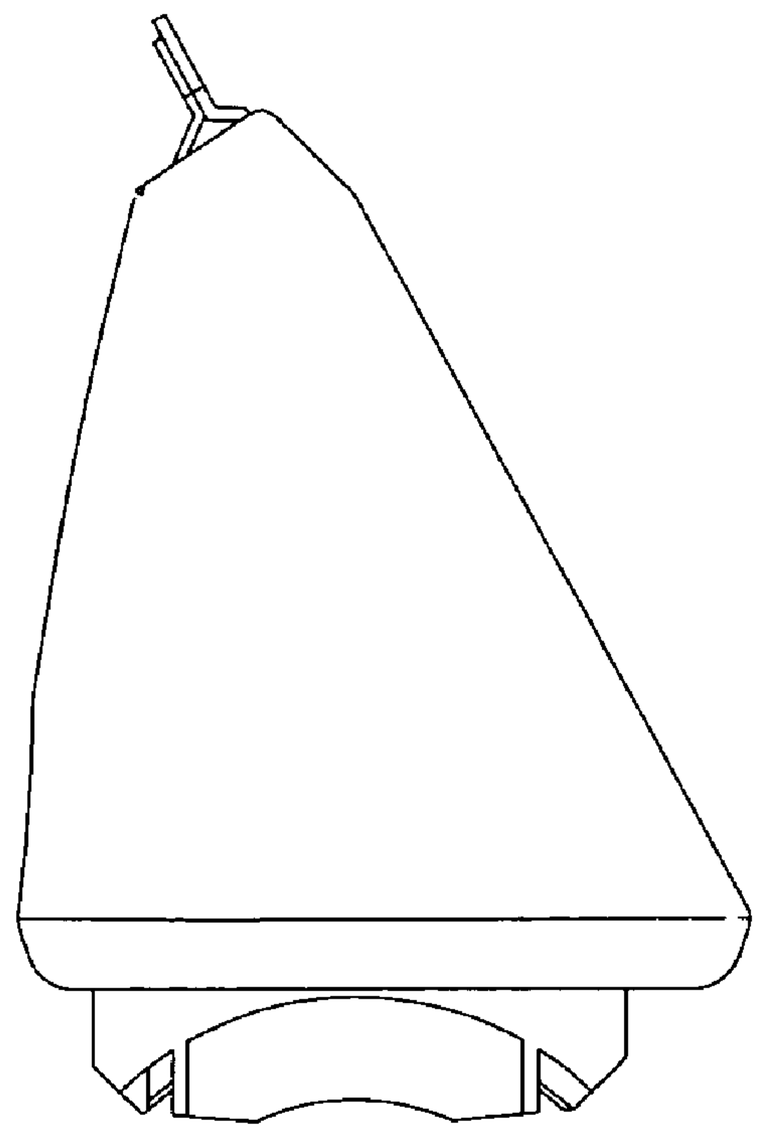

FIG. 6

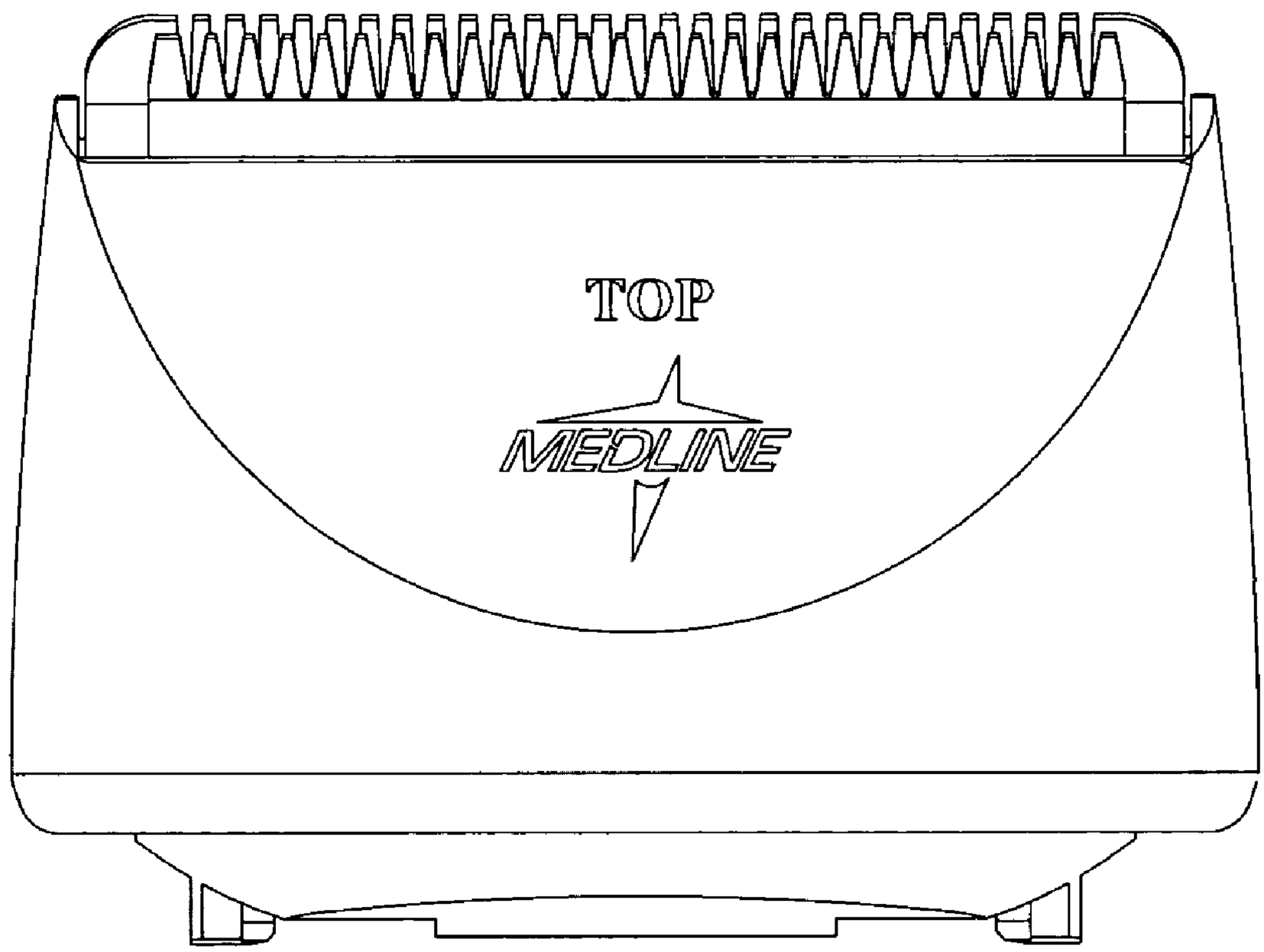

FIG. 7

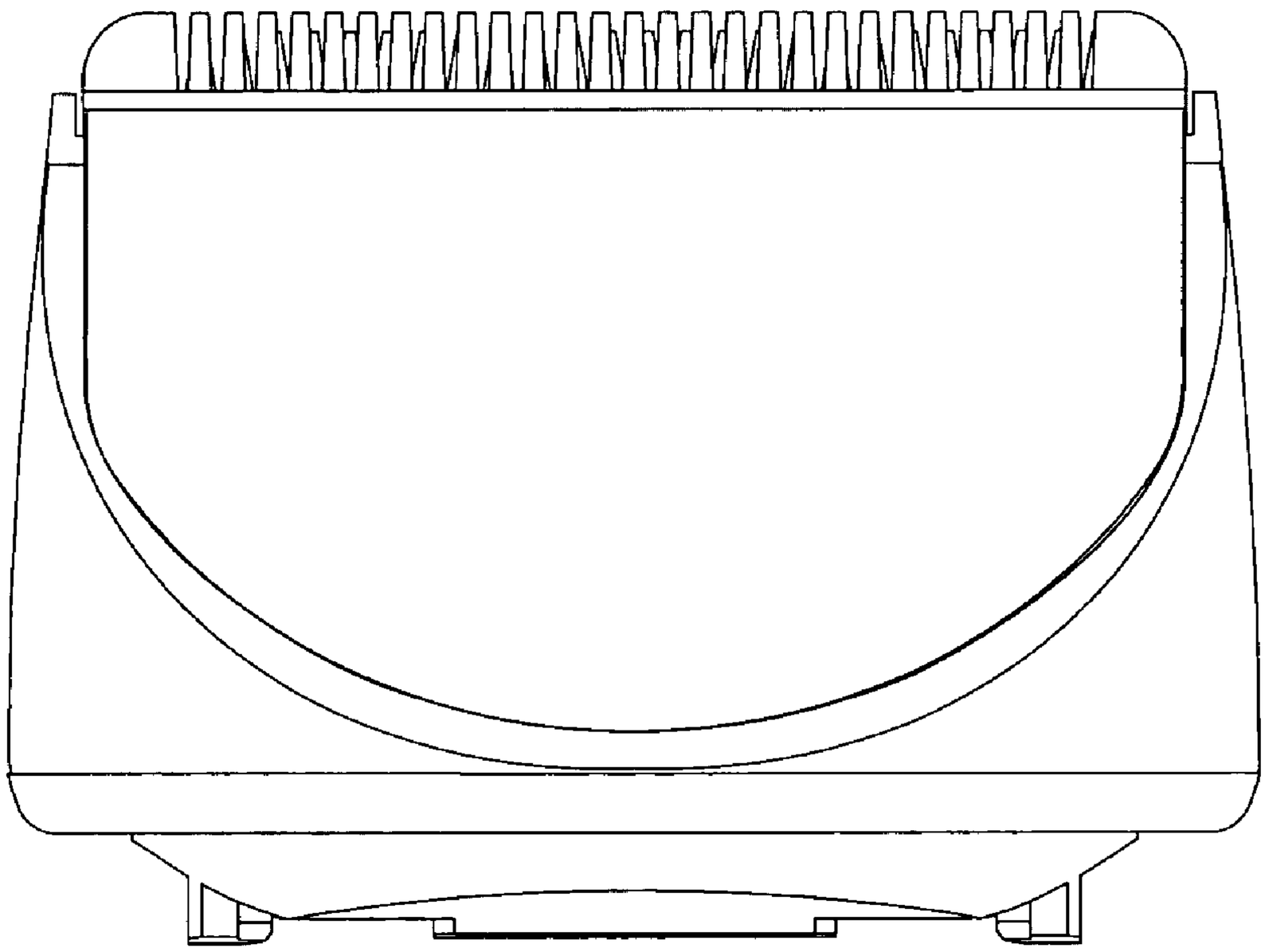

FIG. 8