US00D565649S

(12) United States Design Patent

Hoshiya et al.

(10) Patent No.: US D565,649 S
(45) Date of Patent: ** Apr. 1, 2008

(54) **PAPER FEED AND DISCHARGE PORTION OF A PRINTER**

(75) Inventors: **Kazuhiro Hoshiya**, Shizuoka (JP); **Shigeharu Katayama**, Kakamigahara (JP); **Nobuyuki Iwai**, Aichi-ken (JP)

(73) Assignee: **Brother Industries, Ltd.**, Nagoya (JP)

(**) Term: **14 Years**

(21) Appl. No.: **29/261,338**

(22) Filed: **Jun. 13, 2006**

(30) **Foreign Application Priority Data**

Dec. 13, 2005 (JP) 2005-036717

(51) **LOC (8) Cl.** **18-02**
(52) **U.S. Cl.** **D18/50**; D18/56
(58) **Field of Classification Search** D18/36–39, D18/50, 54, 54.1, 55; D14/420–425, 462–470; 400/613, 613.1–613.4, 690.1–690.4, 691–694; D6/475–476, 512; D19/75, 90–92
See application file for complete search history.

(56) **References Cited**

U.S. PATENT DOCUMENTS

3,439,861 A * 4/1969 Olson 229/185
3,455,462 A * 7/1969 Morgan 211/42
3,727,823 A * 4/1973 Sullivan 206/449
5,092,688 A * 3/1992 Haennelt et al. 400/613
5,224,608 A * 7/1993 Paquette 211/46
5,615,960 A * 4/1997 Mori et al. 400/613
6,132,122 A * 10/2000 Robinson et al. 400/691
D461,843 S * 8/2002 Hattori et al. D18/50
D494,215 S * 8/2004 Evers D18/55
D502,966 S * 3/2005 çakir et al. D19/90
D529,543 S * 10/2006 Fukunaga et al. D18/50
7,163,286 B2 * 1/2007 Shiraiwa et al. 400/692
7,195,411 B2 * 3/2007 Matsuo et al. 400/693
2003/0214779 A1 * 11/2003 Socolofsky 361/683

* cited by examiner

Primary Examiner—Cathy Anne MacCormac
(74) *Attorney, Agent, or Firm*—Oliff & Berridge, PLC

(57) **CLAIM**

The ornamental design for a paper feed and discharge portion of a printer, as shown and described.

DESCRIPTION

FIG. **1** is a perspective view of a paper feed and discharge portion of a printer;

FIG. **2** is a front view thereof;

FIG. **3** is a top view thereof;

FIG. **4** is a right-side view thereof;

FIG. **5** is a left-side view thereof;

FIG. **6** is a rear view thereof;

FIG. **7** is a bottom view thereof; and,

FIG. **8** is a reduced perspective view of the paper feed and discharge portion of a printer withdrawn from a printer.

The broken lines are for illustrative purposes only and form no part of the claimed design.

1 Claim, 6 Drawing Sheets

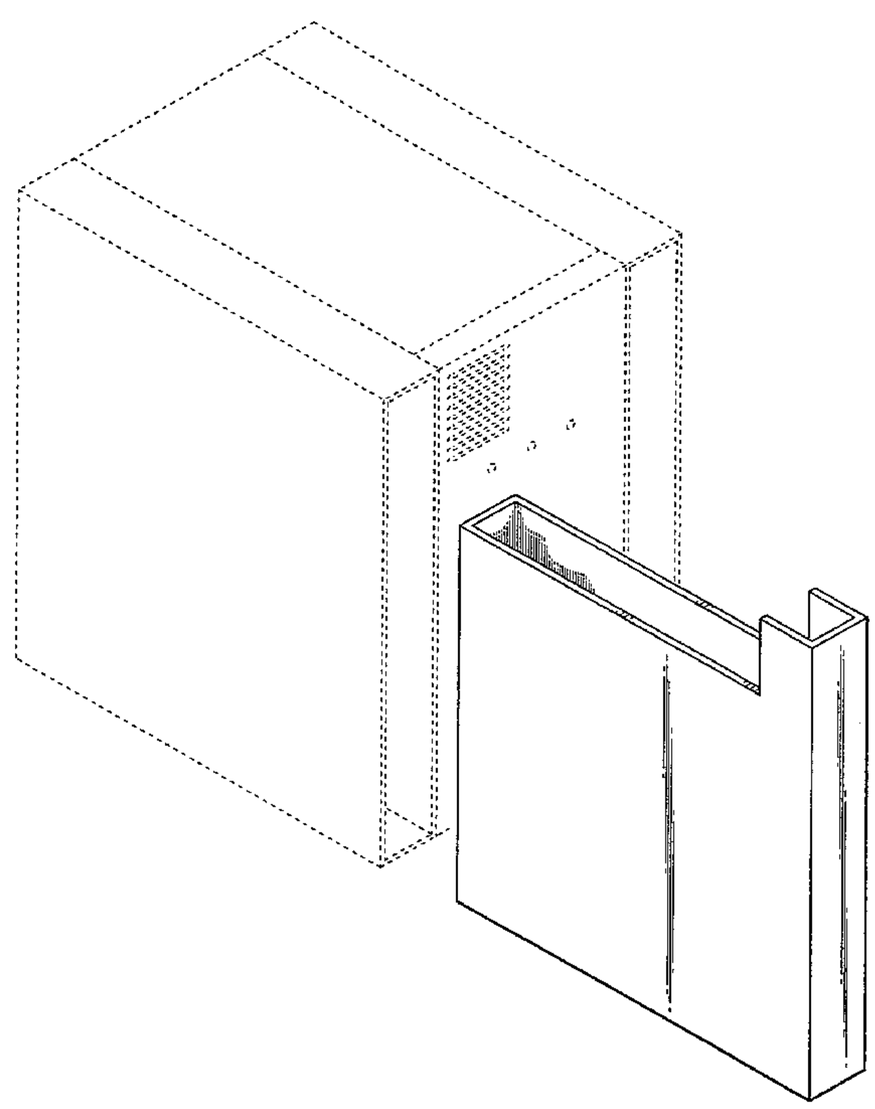

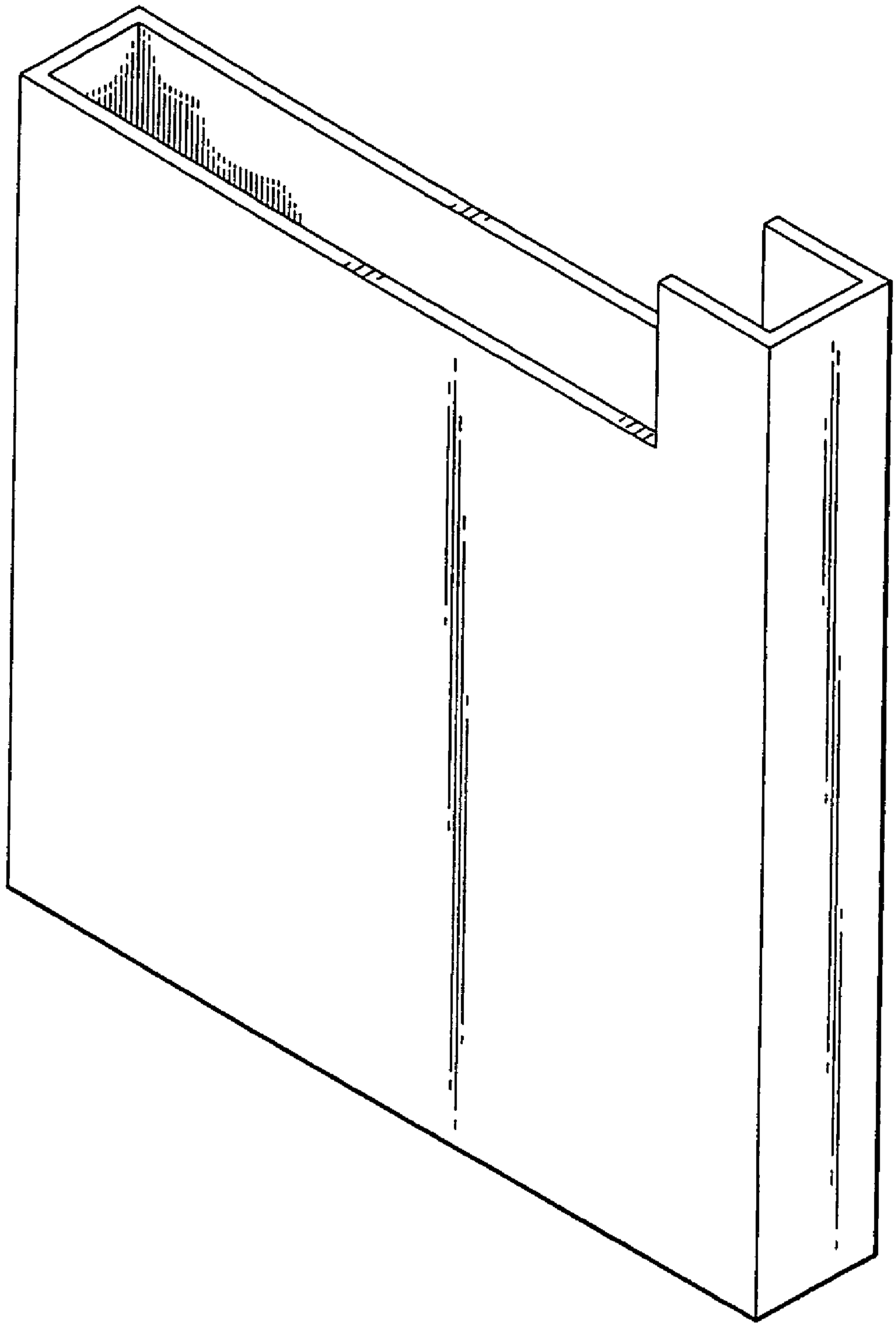

FIG. 1

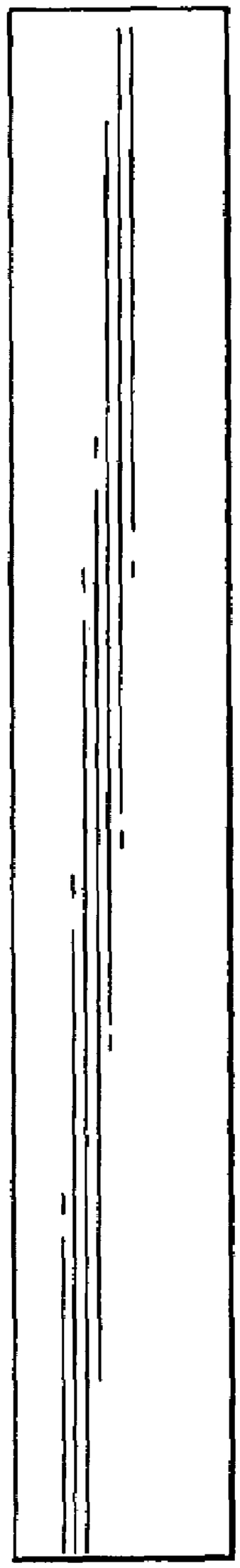

FIG. 2

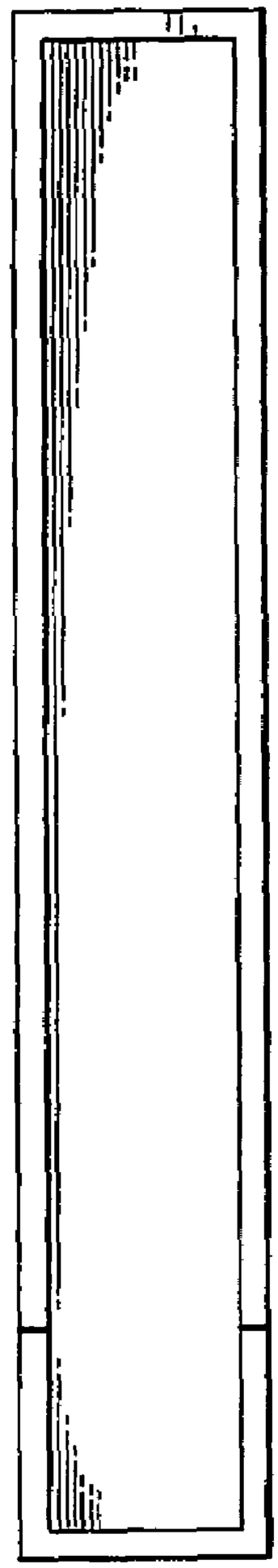

FIG. 3

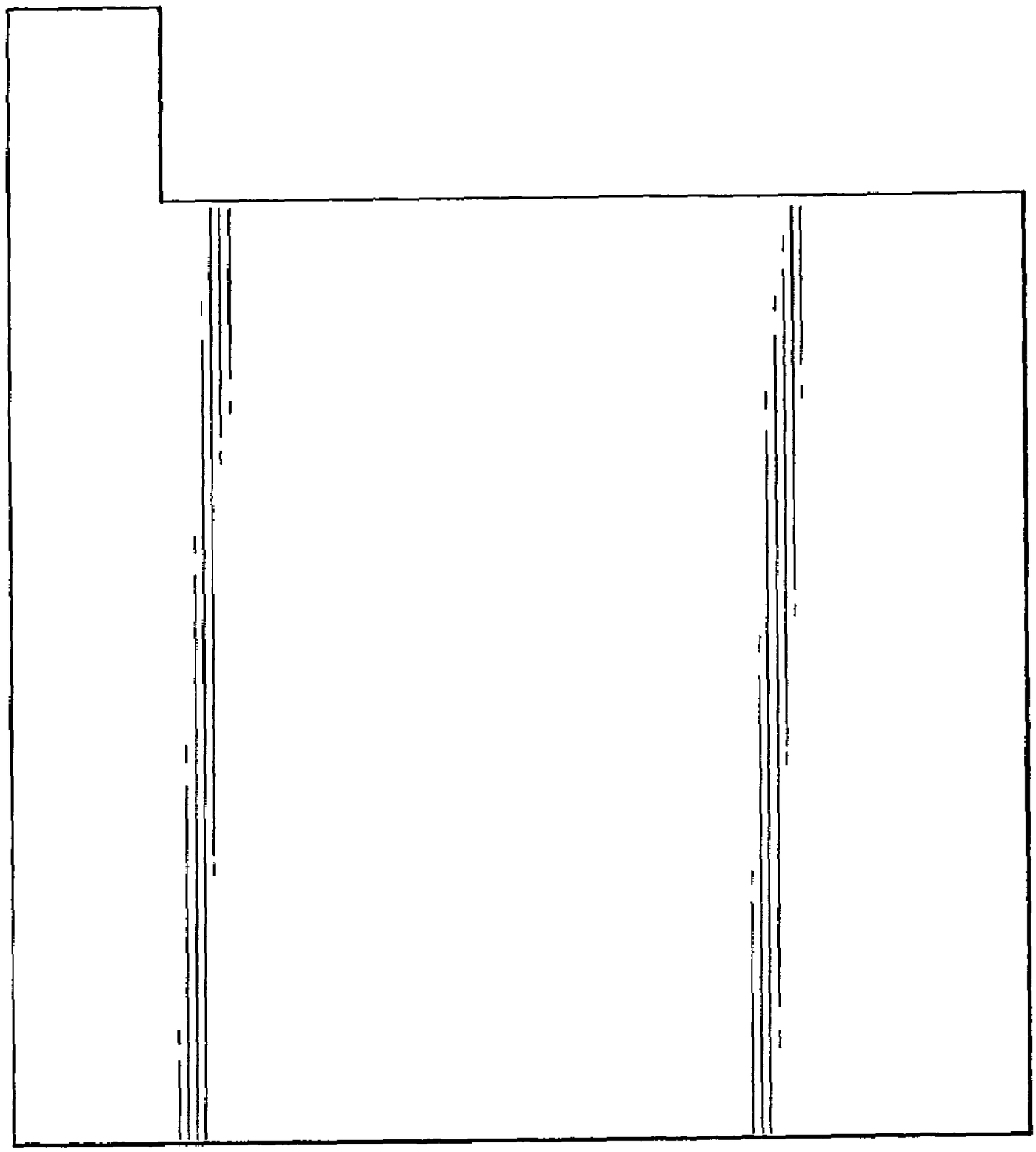

FIG. 4

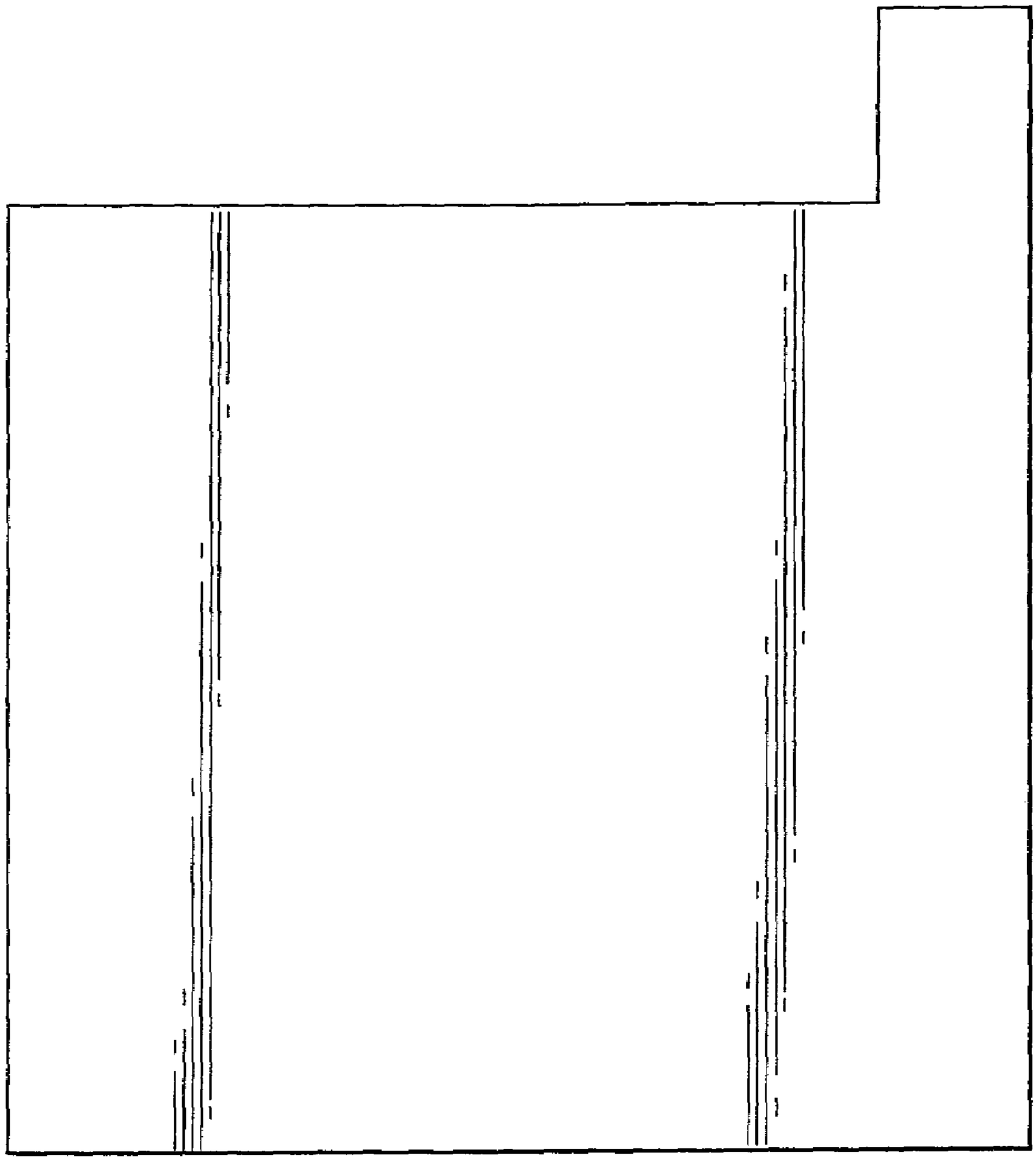

FIG. 5

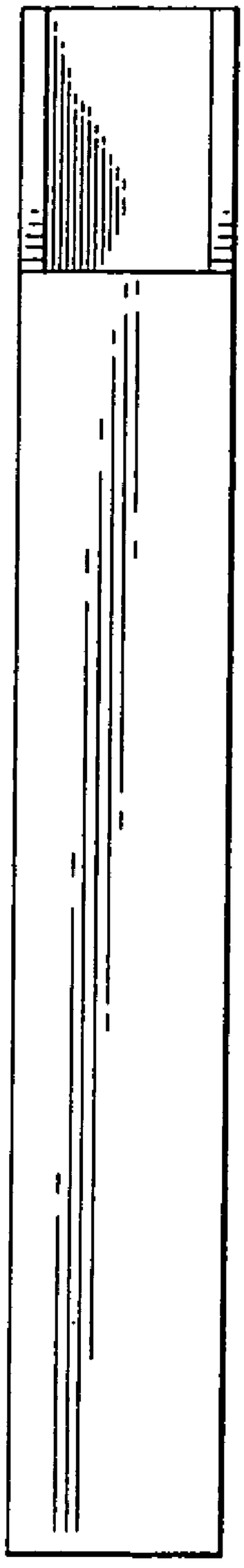

FIG. 6

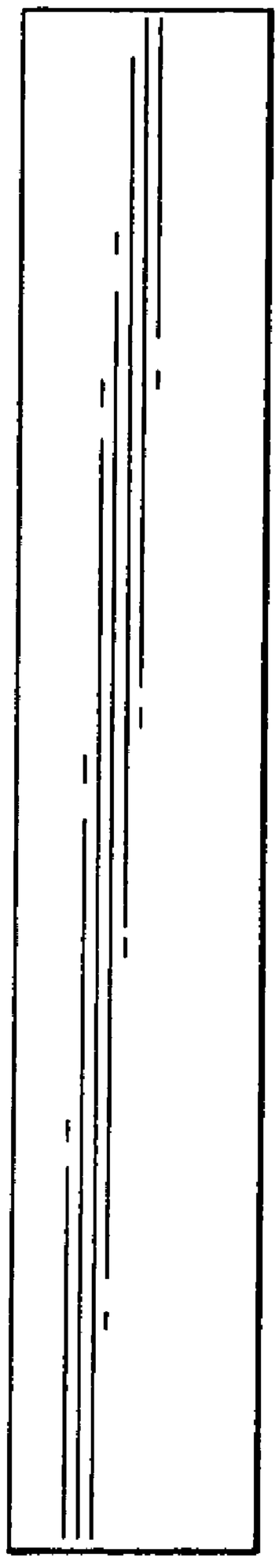

FIG. 7

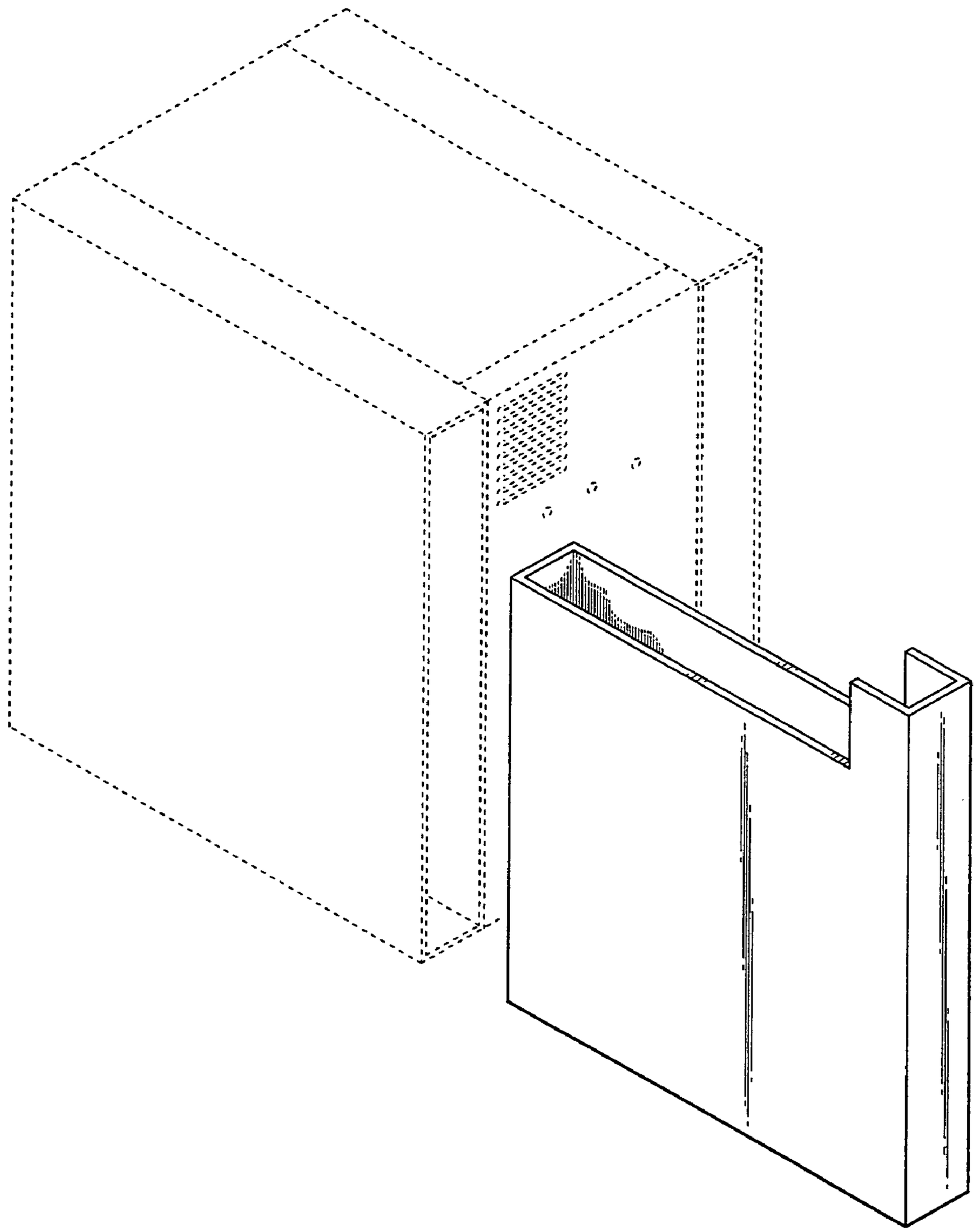

FIG. 8