US00D565645S

(12) United States Design Patent

Kawamura et al.

(10) Patent No.: US D565,645 S
(45) Date of Patent: ** Apr. 1, 2008

(54) **DATA PROCESSING MACHINE**

(75) Inventors: **Toshihiro Kawamura**, Kyoto (JP); **Atsushi Fukumura**, Kyoto (JP); **Makoto Kawamoto**, Kyoto (JP); **Yasuhiro Sakanashi**, Kyoto (JP); **Kouichi Motoyoshi**, Kyoto (JP)

(73) Assignee: **Murata Kikai Kikai Kabushiki Kaisha**, Kyoto (JP)

(**) Term: **14 Years**

(21) Appl. No.: **29/249,547**

(22) Filed: **Oct. 11, 2006**

Related U.S. Application Data

(62) Division of application No. 29/213,012, filed on Sep. 10, 2004.

(30) **Foreign Application Priority Data**

Mar. 15, 2004 (JP) 2004-007625
Mar. 15, 2004 (JP) 2004-007626
Mar. 15, 2004 (JP) 2004-007627
Mar. 15, 2004 (JP) 2004-007628
Mar. 15, 2004 (JP) 2004-007629

(51) **LOC (8) Cl.** **16-03**
(52) **U.S. Cl.** **D18/39**
(58) **Field of Classification Search** D18/36–41; 222/DIG. 1; 271/3.14, 8.1, 226, 278; 355/97, 355/99; 358/1.1; 399/1–7, 16, 75, 81, 107, 399/130, 151, 361, 365, 367, 381–383, 388
See application file for complete search history.

(56) **References Cited**

U.S. PATENT DOCUMENTS

D317,622	S	6/1991	Isomoto et al.	D18/38
D320,808	S	10/1991	Ishida	D18/37
D328,609	S	8/1992	Ishida	D18/36
D338,031	S	8/1993	Katada et al.	D18/36
D374,454	S *	10/1996	Naruki et al.	D18/36
D380,006	S	6/1997	Takahashi et al.	D18/39
5,881,333	A *	3/1999	Takahashi et al.	399/2
D408,443	S	4/1999	Sasaki	D18/36

(Continued)

FOREIGN PATENT DOCUMENTS

JP	D1064657	3/2000
JP	D1079578	7/2000
JP	D1080075	7/2000
JP	D1080075-1	7/2000
JP	D1093357	12/2000
JP	D1094127	12/2000

(Continued)

Primary Examiner—Caron D. Veynar
Assistant Examiner—Garth Rademaker
(74) *Attorney, Agent, or Firm*—Hogan & Hartson LLP

(57) **CLAIM**

The ornamental design for a data processing machine, as shown and described.

DESCRIPTION

This article is a data processing machine used as a facsimile, a copier, a scanner, or a printer or a multifunctional machine of any combination thereof.

FIG. **1** is a perspective view of our design for a data processing machine;

FIG. **2** is a front view thereof;

FIG. **3** is a rear view thereof;

FIG. **4** is a top plan view thereof;

FIG. **5** is a bottom plan view thereof;

FIG. **6** is a right side elevational view thereof; and,

FIG. **7** is a left side elevational view thereof.

The broken lines depict environmental subject matter only and form no part of the claimed design.

1 Claim, 7 Drawing Sheets

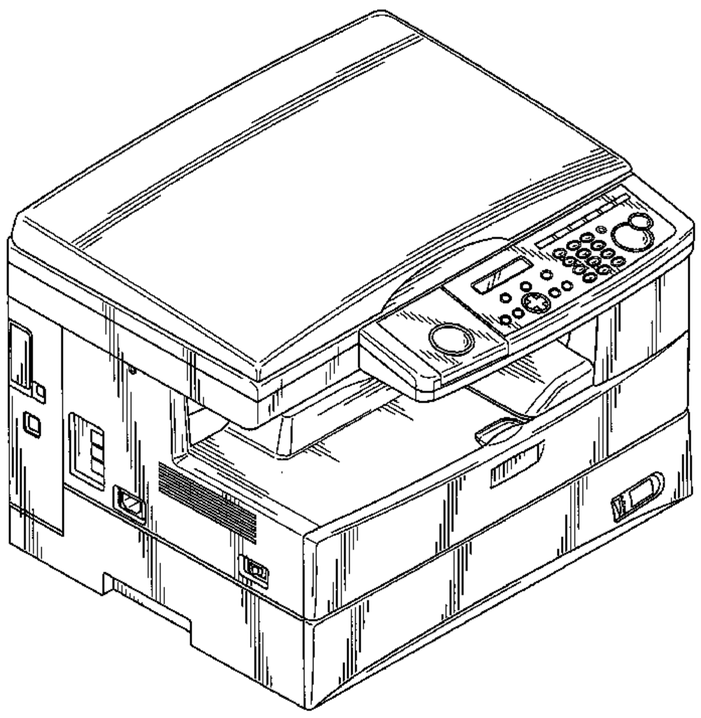

U.S. PATENT DOCUMENTS

D410,675	S	6/1999	Ohashi	D18/36
D415,787	S	10/1999	Clark et al.	D18/36
D424,101	S	5/2000	Takeuchi	D18/53
D425,929	S	5/2000	Imai	D18/36
D433,439	S	11/2000	Yoshida et al.	D18/36
D451,124	S	11/2001	Isomoto	D18/39
D459,752	S *	7/2002	Shiozaki	D18/36
D473,587	S	4/2003	Agata et al.	D18/39
D502,210	S	2/2005	Katori et al.	D18/39
D521,544	S	5/2006	Saito	D18/39
7,046,955	B2 *	5/2006	Hatanaka et al.	399/107
D525,291	S	7/2006	Fukumura et al.	D18/49
D526,678	S	8/2006	Inoue et al.	D18/49
7,092,646	B2	8/2006	Schroath et al.	399/21
7,149,011	B2 *	12/2006	Kawamura et al.	399/367
D537,471	S	2/2007	Inoue	
2003/0219273	A1	11/2003	Fujita et al.	399/81
2004/0264999	A1 *	12/2004	Marumoto	399/107
2005/0069336	A1	3/2005	Kotani	399/81
2005/0254869	A1 *	11/2005	Yamada et al.	399/361

FOREIGN PATENT DOCUMENTS

JP	D1099881	2/2001
JP	D1120834	9/2001
JP	D1134624	2/2002
JP	D1134625	2/2002
JP	D1137127	3/2002
JP	D1149603	8/2002
JP	D1153194	9/2002
JP	D1153207	9/2002
JP	D1153694	9/2002
JP	D1153721	9/2002
JP	D1166763	3/2003
JP	D1192394	12/2003
JP	D1200324	3/2004
JP	D1200502	3/2004
JP	D1201650	4/2004
JP	D1201653	4/2004

* cited by examiner

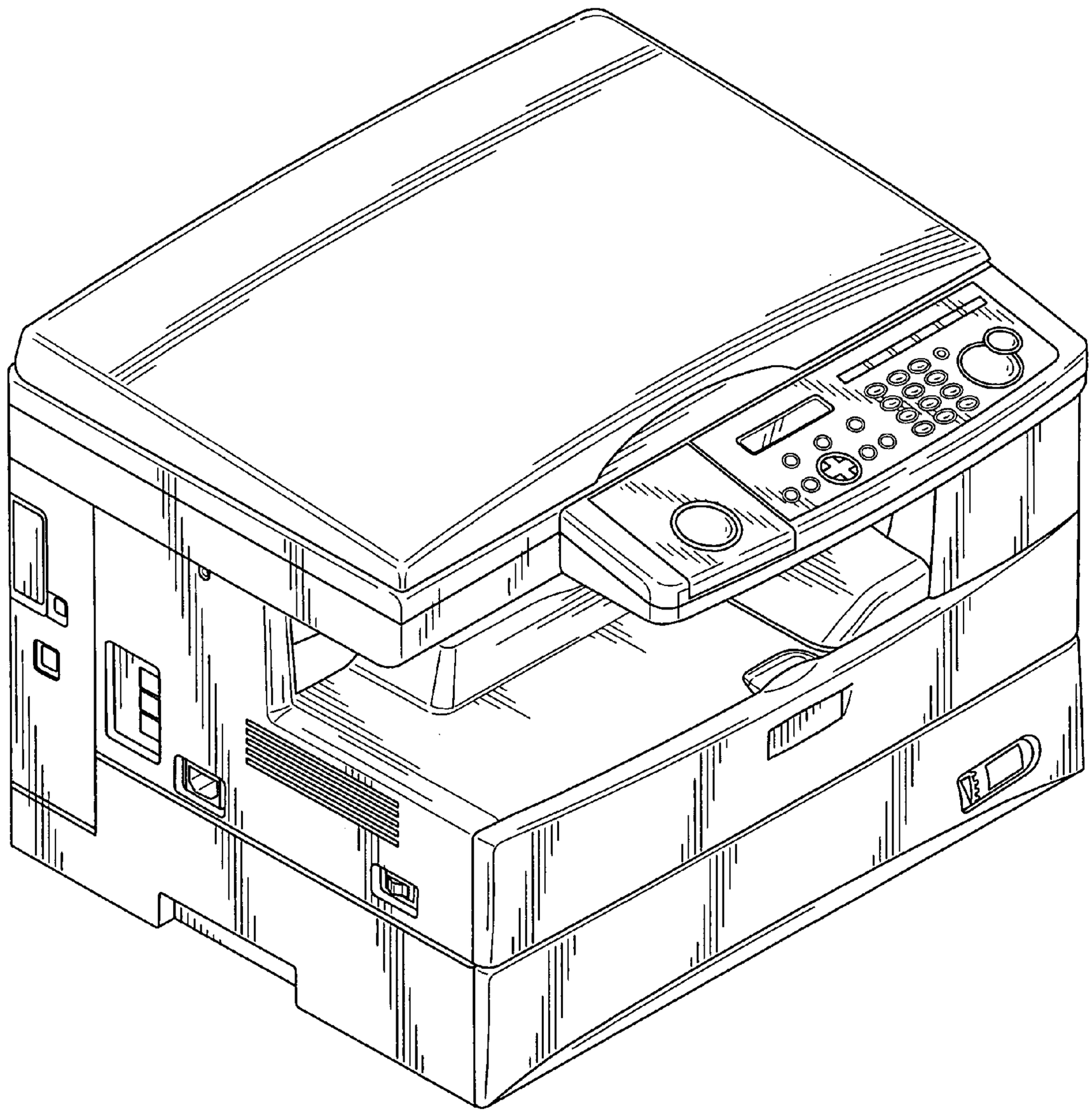

FIG. 1

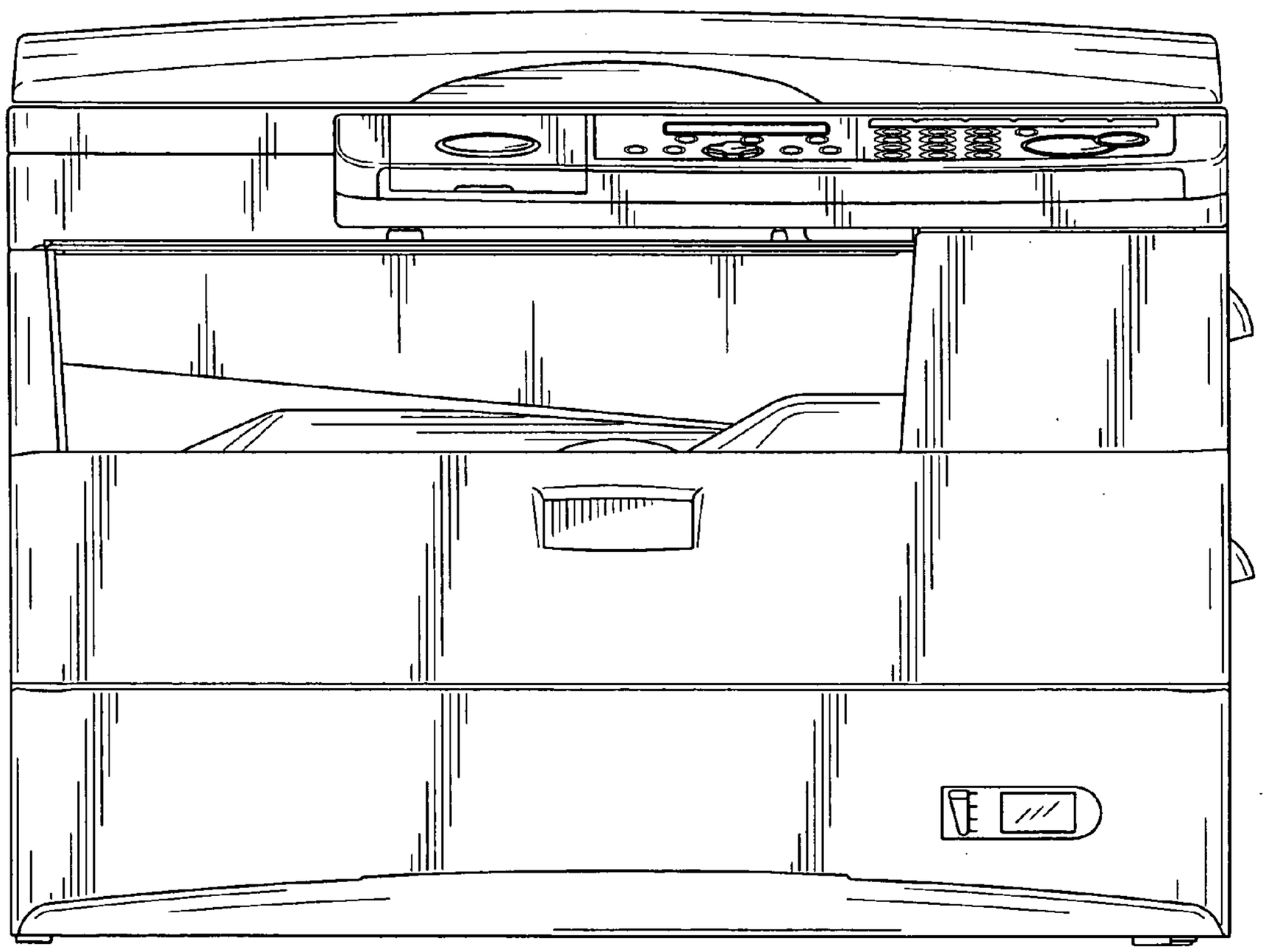

FIG. 2

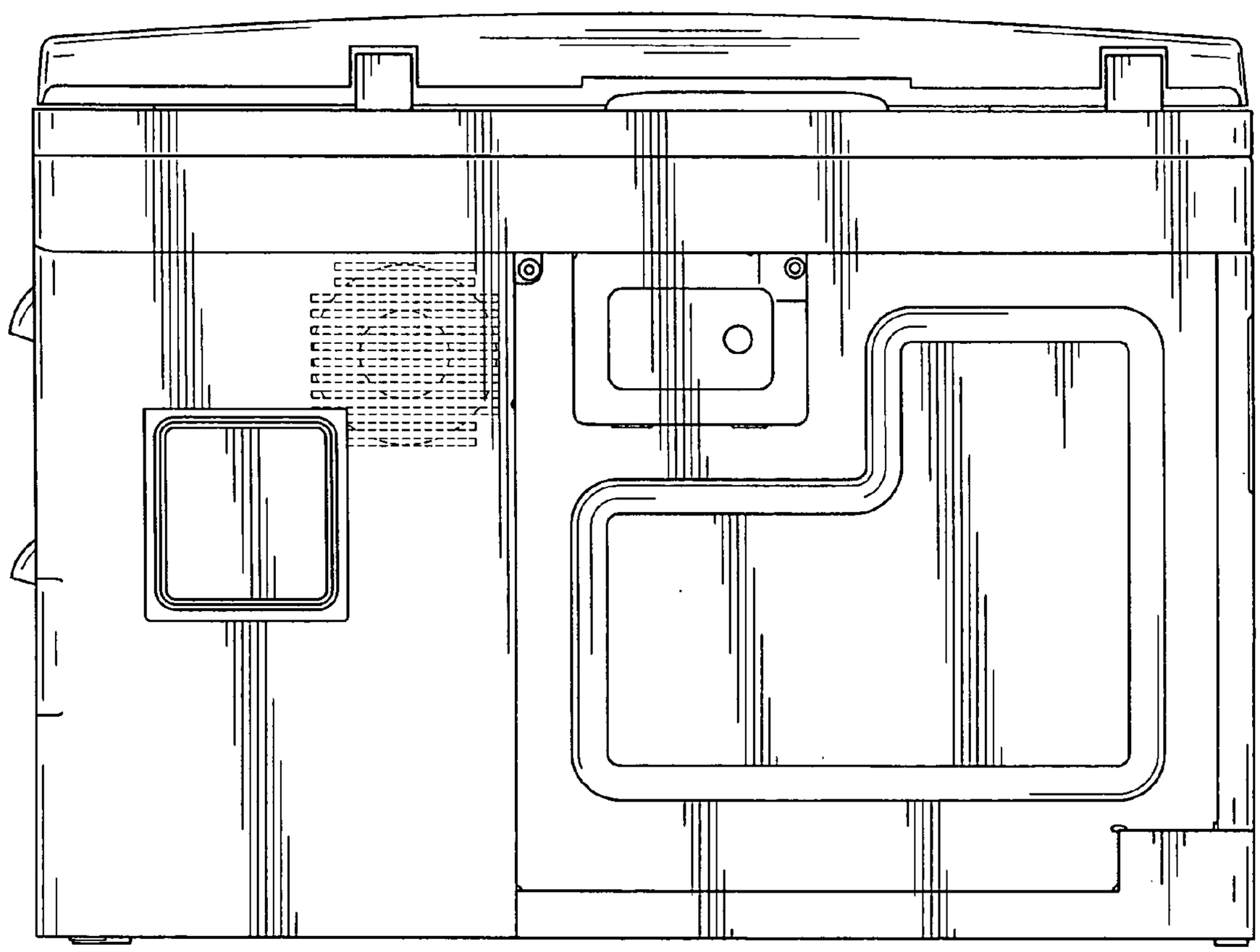

FIG. 3

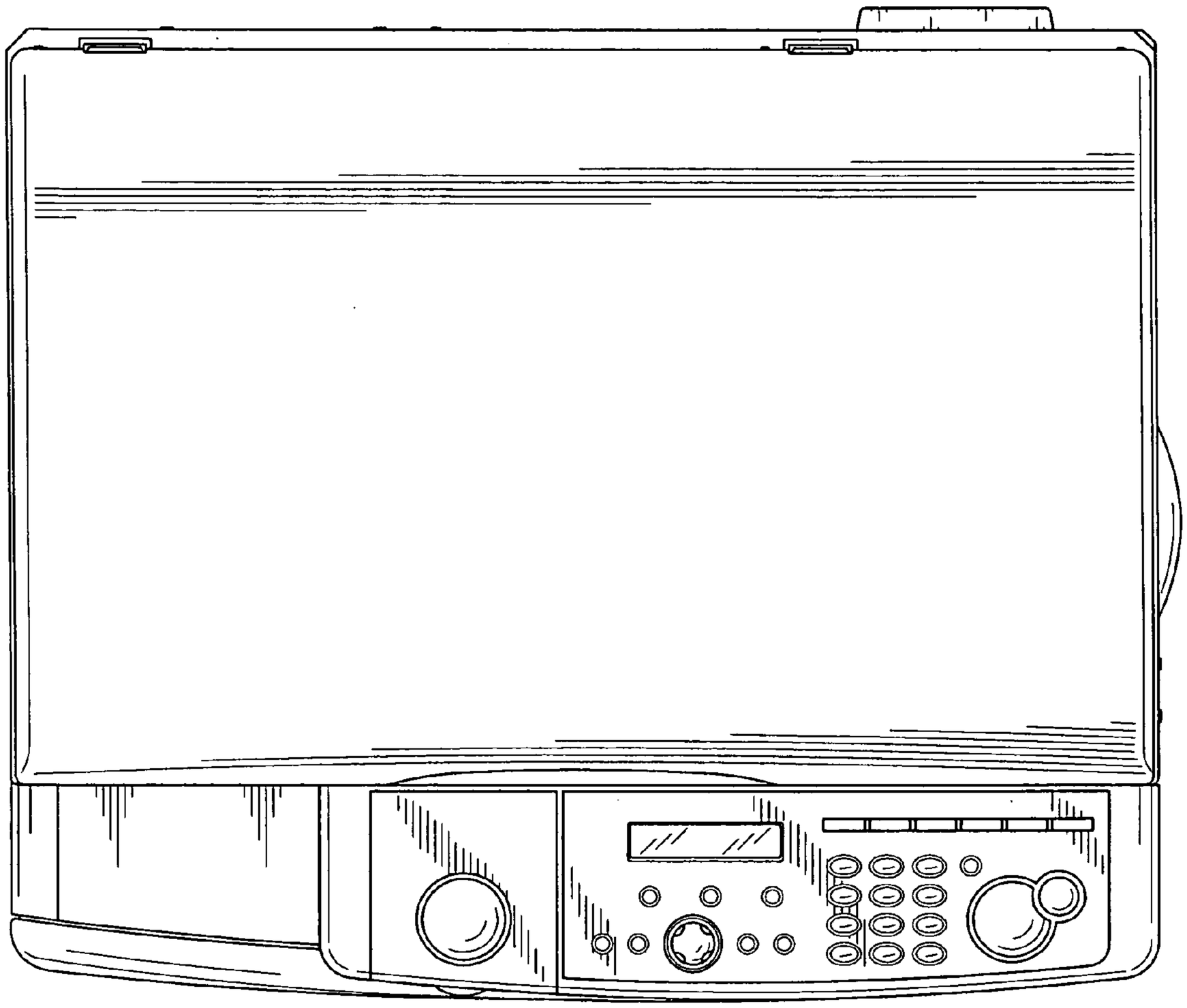

FIG. 4

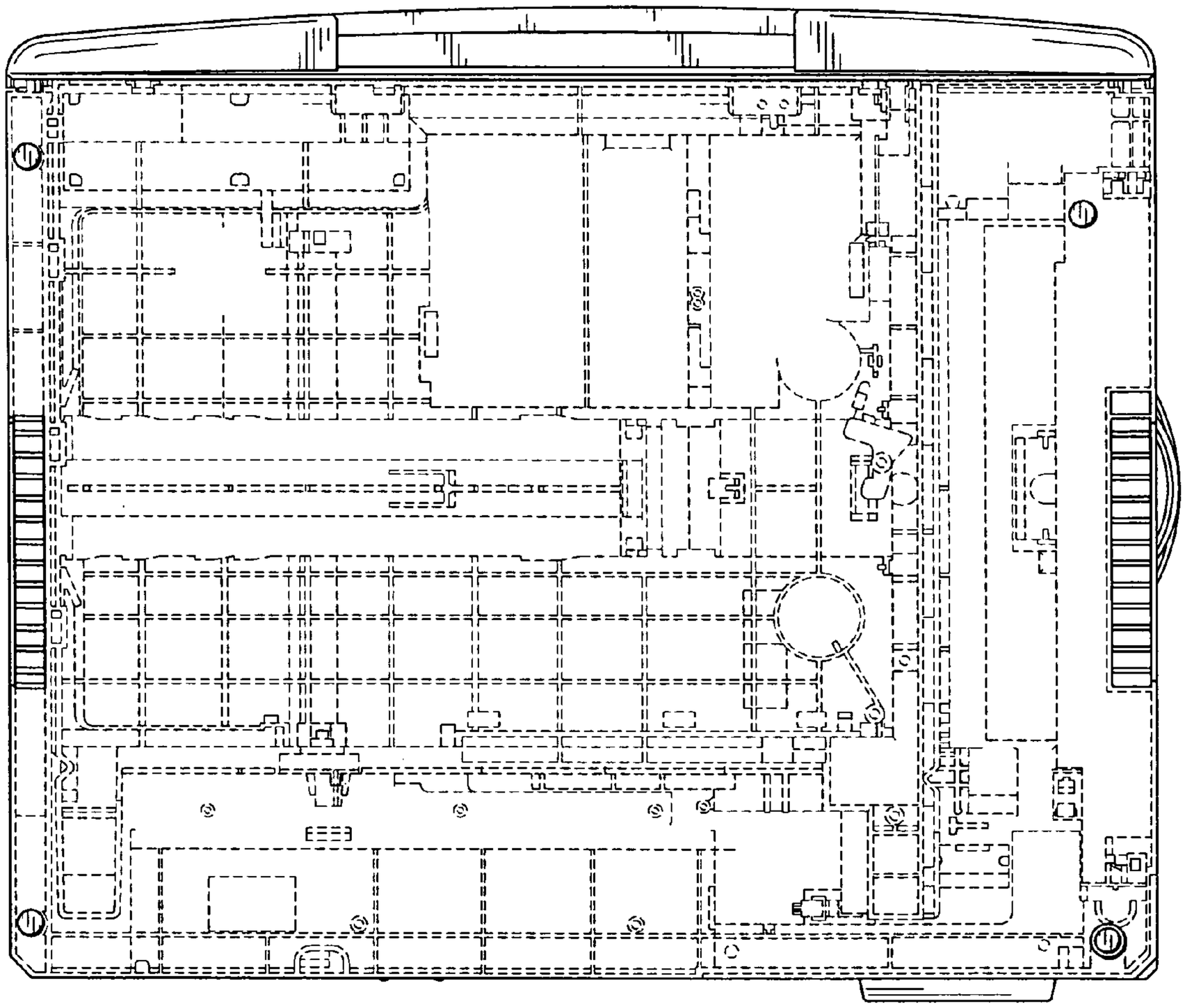

FIG. 5

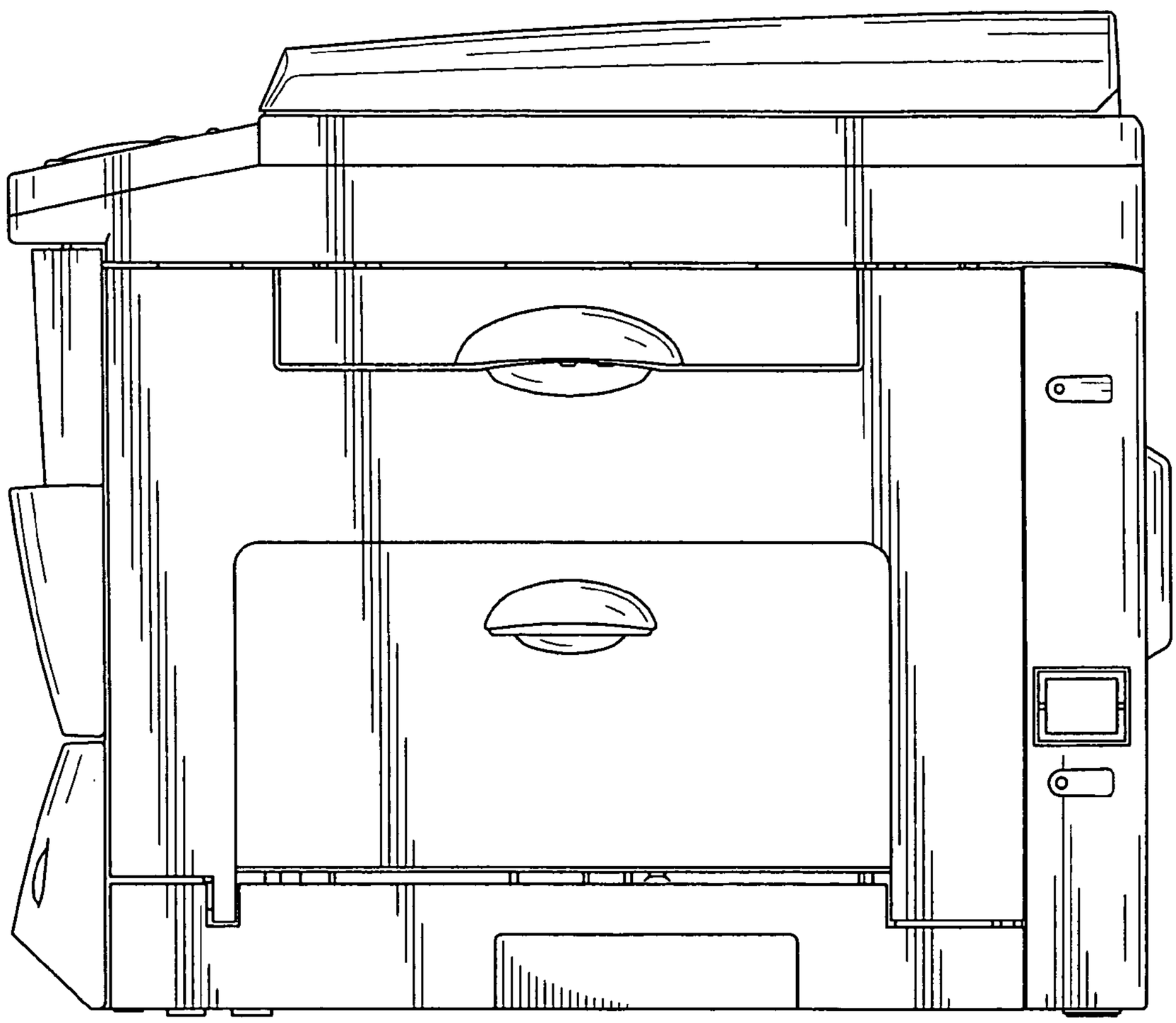

FIG. 6

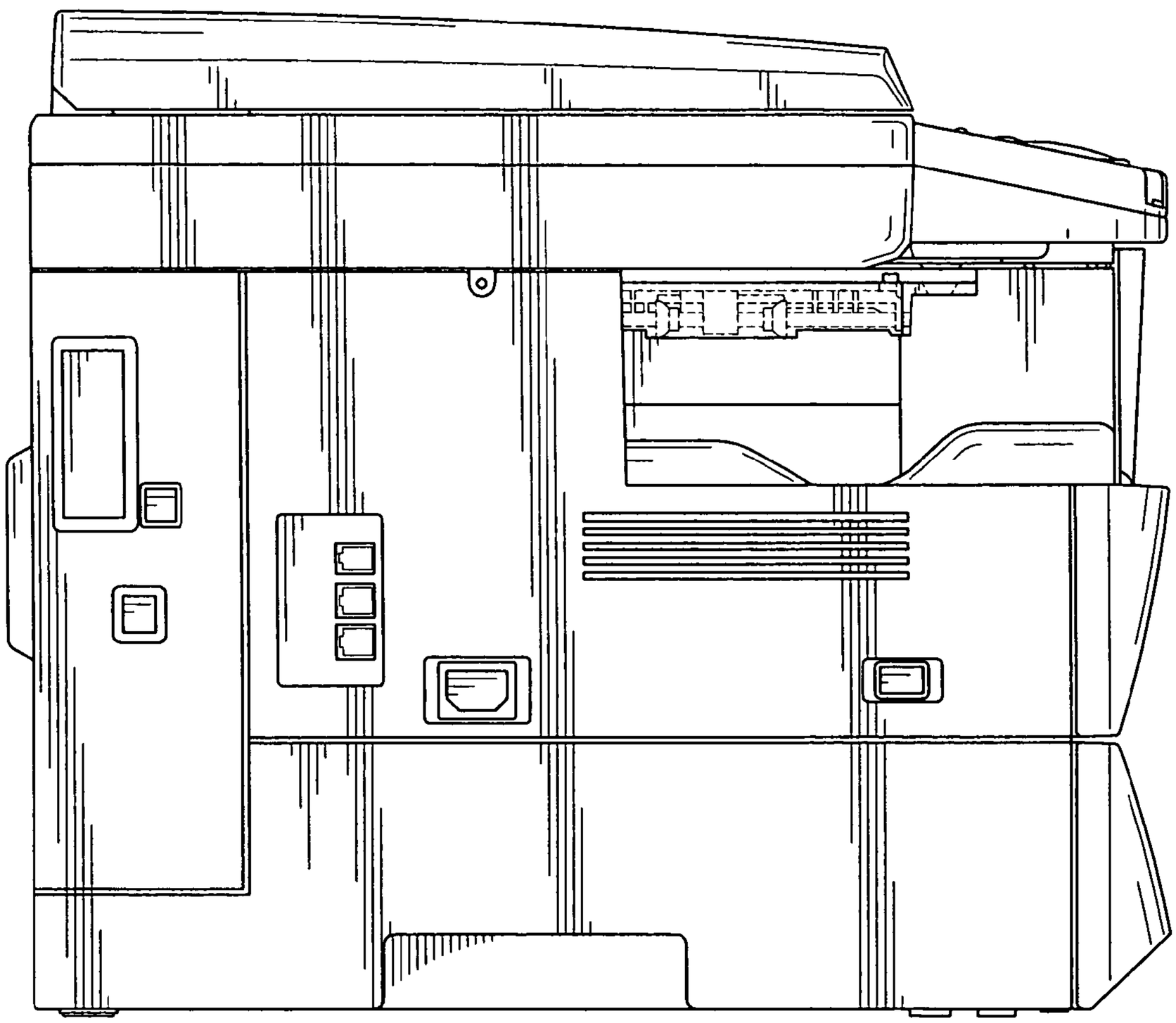

FIG. 7

UNITED STATES PATENT AND TRADEMARK OFFICE

CERTIFICATE OF CORRECTION

PATENT NO. : Des. 565,645 S
APPLICATION NO. : 29/249547
DATED : April 1, 2008
INVENTOR(S) : Toshihiro Kawamura et al.

It is certified that error appears in the above-identified patent and that said Letters Patent is hereby corrected as shown below:

Title Page;
Col. 1, line 73, change "Murata Kikai Kikai Kabushiki Kaisha, Kyoto (JP)" to Murata Kikai Kabushiki Kaisha, Kyoto (JP)

Signed and Sealed this

Eighth Day of July, 2008

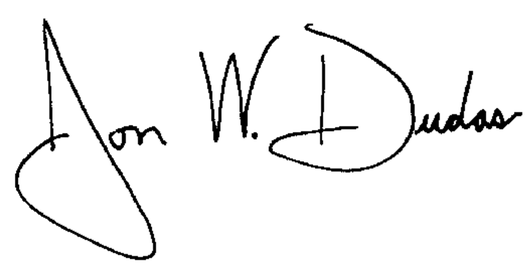

JON W. DUDAS
Director of the United States Patent and Trademark Office