US00D565270S

(12) United States Design Patent

Ruppert et al.

(10) Patent No.: US D565,270 S
(45) Date of Patent: ** Mar. 25, 2008

(54) **WALKIE STACKER LIFT TRUCK**

(75) Inventors: **Adam M. Ruppert**, Wapakoneta, OH (US); **Benjamin J. Purrenhage**, Troy, OH (US); **Roger J. Quinlan, Jr.**, Troy, OH (US); **Robert J. Henshaw**, Newnan, GA (US); **Steven R. Pulskamp**, New Bremen, OH (US); **Michael P. Gallagher**, Greenville, OH (US)

(73) Assignee: **Crown Equipment Corporation**, New Bremen, OH (US)

(**) Term: **14 Years**

(21) Appl. No.: **29/249,294**

(22) Filed: **Sep. 29, 2006**

(51) **LOC (8) Cl.** **12-05**
(52) **U.S. Cl.** **D34/34**
(58) **Field of Classification Search** D34/34; 180/89.12, 299, 325; 280/43.12; 187/222, 187/224
See application file for complete search history.

(56) **References Cited**

U.S. PATENT DOCUMENTS

3,181,640	A	*	5/1965	Goodacre et al.	180/19.2
3,190,994	A	*	6/1965	Becker et al.	200/61.85
3,243,194	A	*	3/1966	Trusock	280/43.12
3,261,617	A	*	7/1966	Becker et al.	280/43.12
D239,165	S	*	3/1976	Mono	D34/34
D370,761	S	*	6/1996	Stark	D34/34
5,590,735	A	*	1/1997	Cartier	180/210
D386,876	S	*	11/1997	Niebuhr	D34/34
5,964,313	A	*	10/1999	Guy	180/332
6,125,971	A	*	10/2000	Niebuhr et al.	187/231
6,199,665	B1		3/2001	Eilerman et al.	
D445,553	S		7/2001	Pulskamp et al.	
D447,612	S	*	9/2001	Niebuhr	D34/34
D499,521	S	*	12/2004	Swetish et al.	D34/35
D539,503	S	*	3/2007	Quinlan et al.	D34/35

OTHER PUBLICATIONS

Crown specification brochure No. SF14105 Rev. 5/04 entitled Crown W Series, entitled Heavy-Duty Walkie Stacker, New Bremen, Ohio.
Crown specification brochure No. SF14107 Rev. 6/03 entitled Crown Series WB, Counterbalanced Walkies, New Bremen, Ohio.
Crown specification brochure No. 14106 Rev. 6/03 entitled Crown Series WR, Heavy Duty Walkie Reach Stackers, New Bremen, Ohio.
Crown specification brochure No. SF12895 Rev. 6/06 entitled Crown RR 5200 Series, Narrow-Aisle Reach Truck.

* cited by examiner

Primary Examiner—Cynthia E. Ramirez
(74) *Attorney, Agent, or Firm*—Stevens & Showalter LLP

(57) **CLAIM**

The ornamental design for a walkie stacker lift truck, as shown.

DESCRIPTION

FIG. **1** is a perspective view of a first embodiment of a walkie stacker lift truck as seen from the top, rear and right sides;

FIG. **2** is a top plan view thereof;

FIG. **3** is a right side elevational view thereof, the left side elevational view being a mirror image;

FIG. **4** is a rear elevational view thereof;

FIG. **5** is a front elevational view thereof;

FIG. **6** is a perspective view of a second embodiment of a walkie stacker lift truck as seen from the top, rear and right sides;

FIG. **7** is a top plan view thereof;

FIG. **8** is a right side elevational view thereof, the left side elevational view being a mirror image;

FIG. **9** is a rear elevational view thereof; and,

FIG. **10** is a front elevational view thereof.

The broken lines showing in the figures are for illustrative purposes only and form no part of the claimed design.

1 Claim, 10 Drawing Sheets

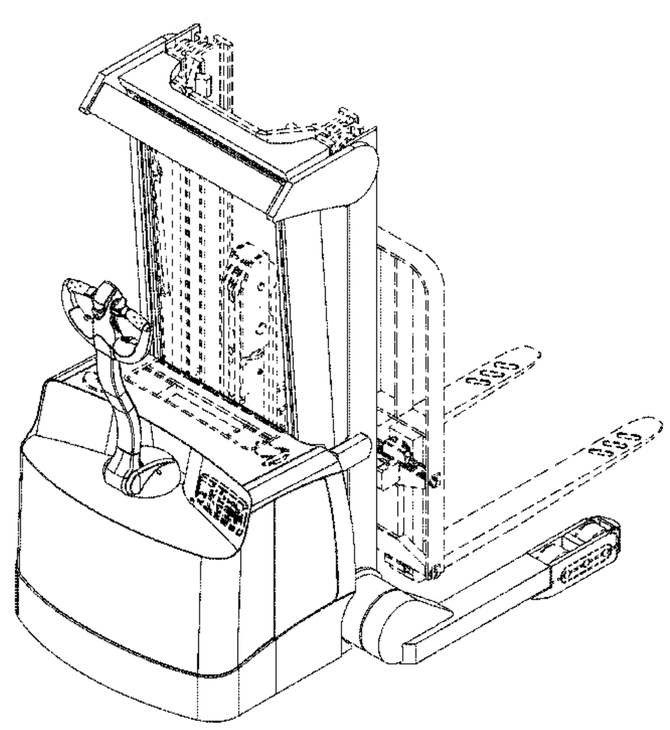

FIG. 1

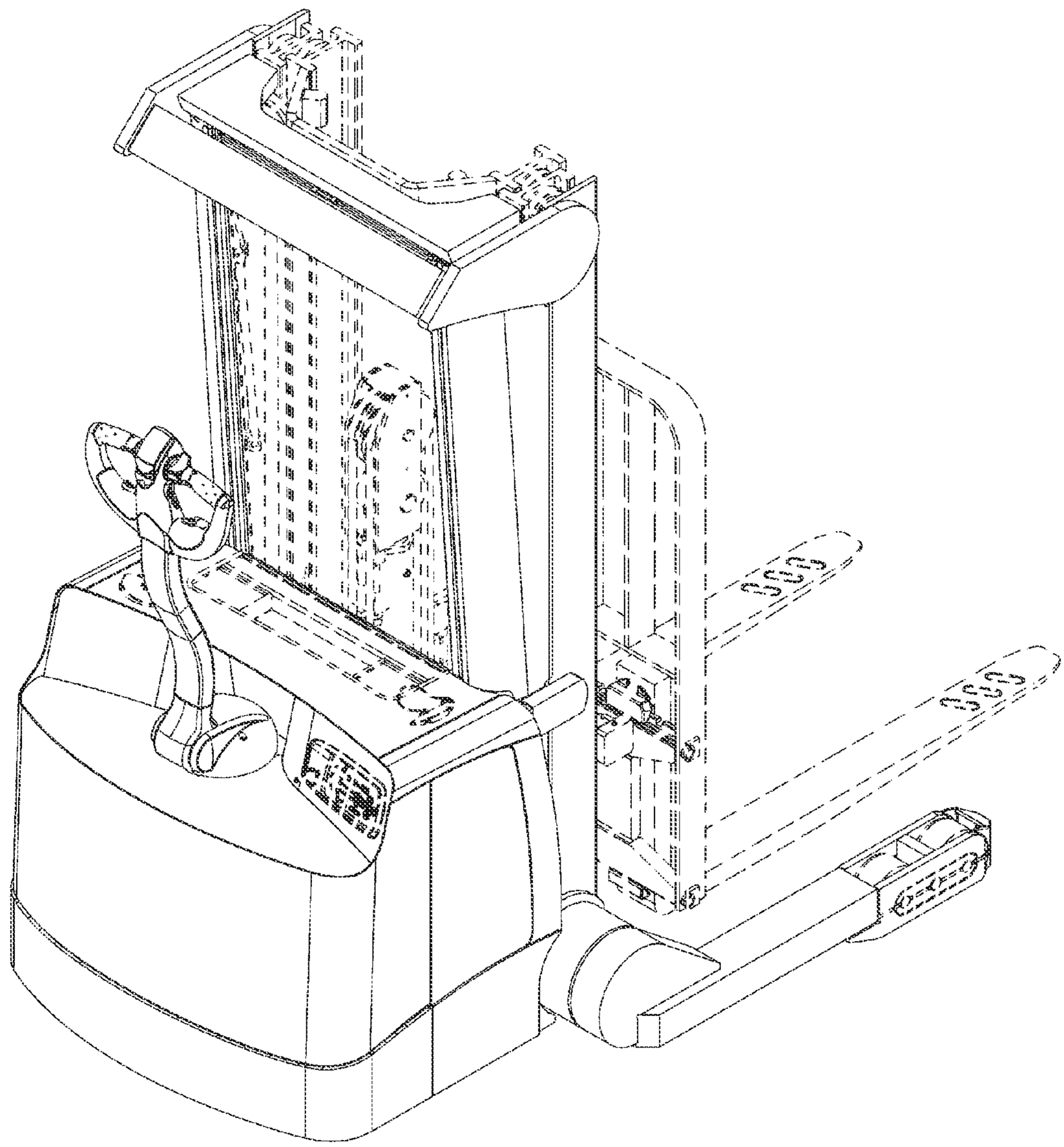

FIG. 2

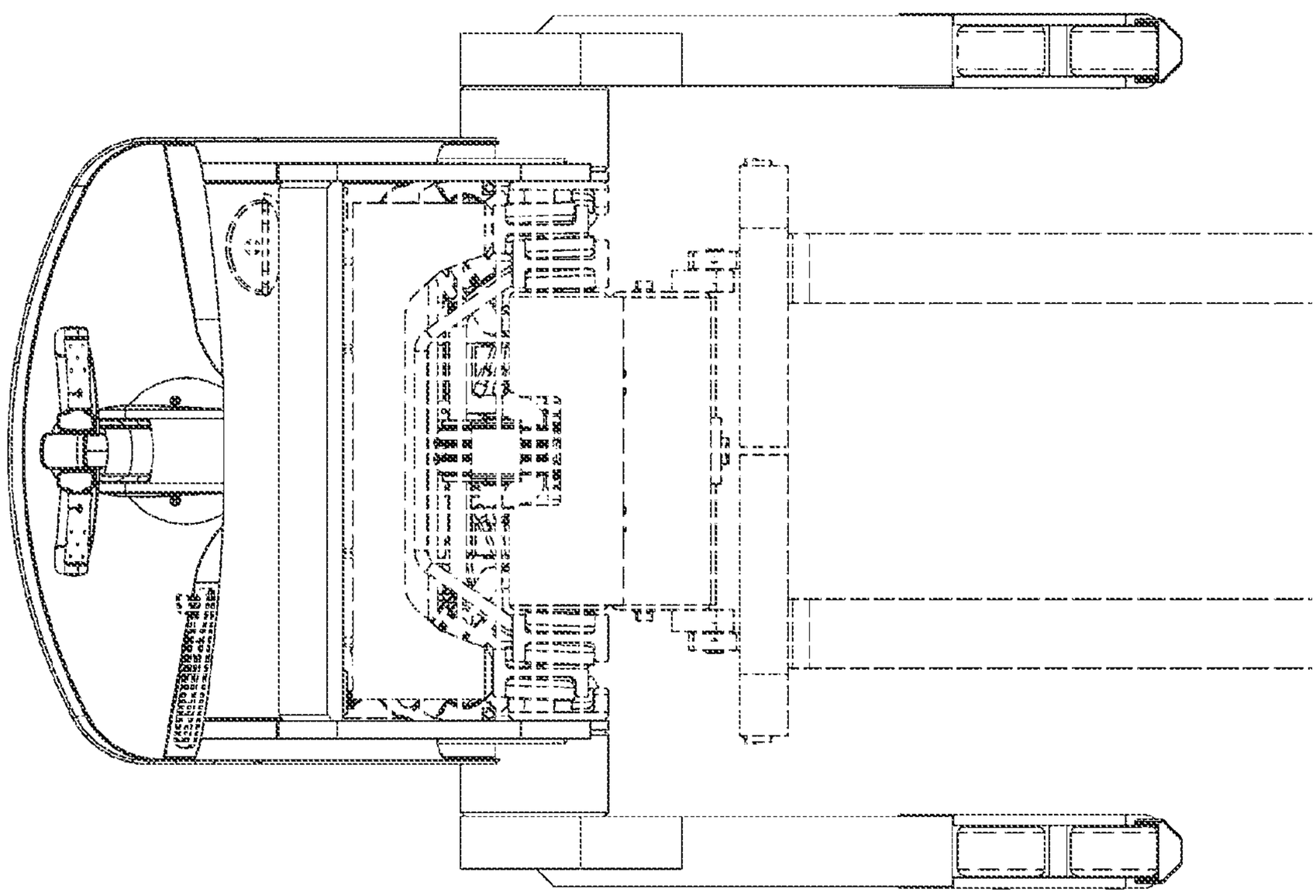

FIG. 3

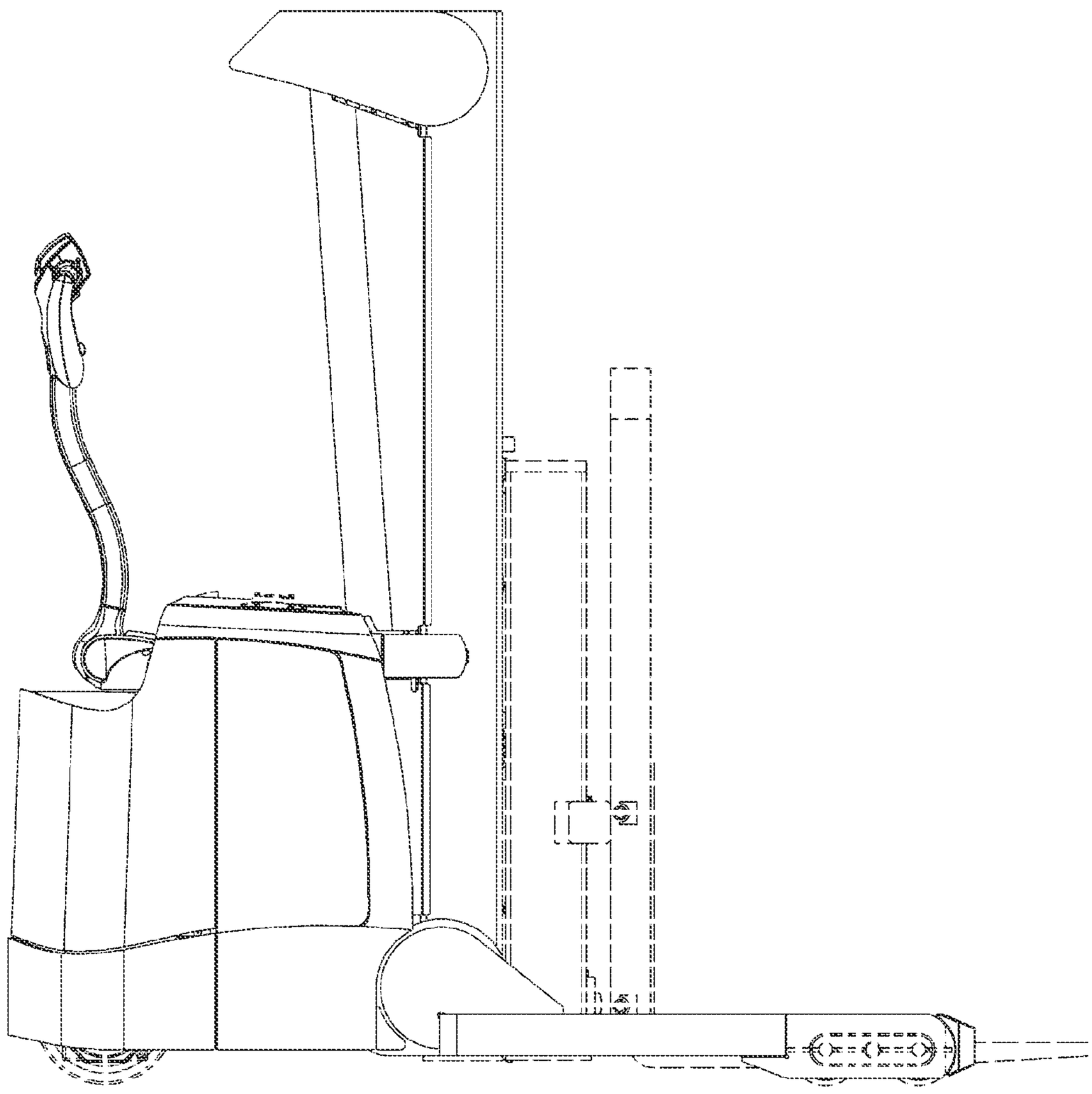

FIG. 4

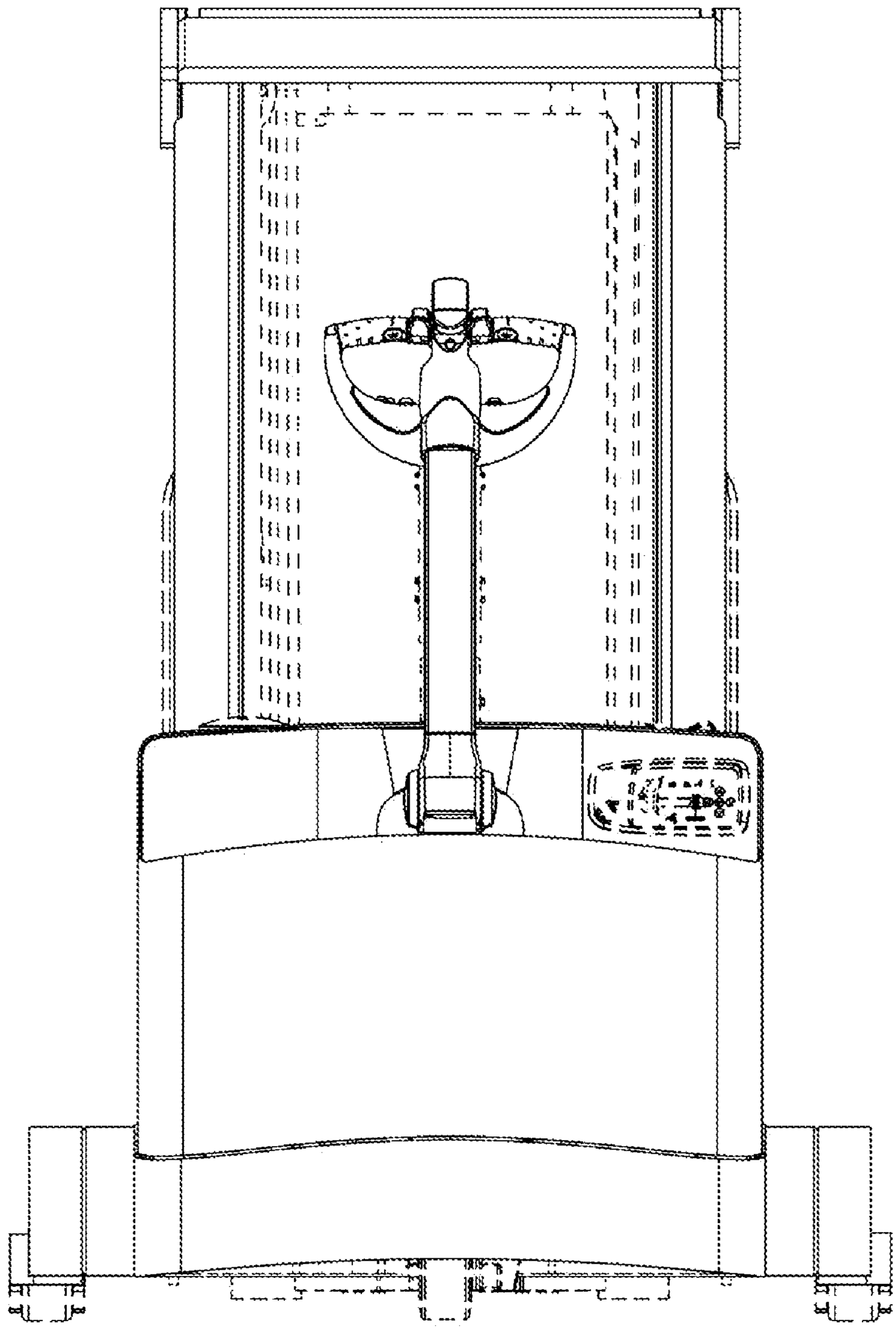

FIG. 5

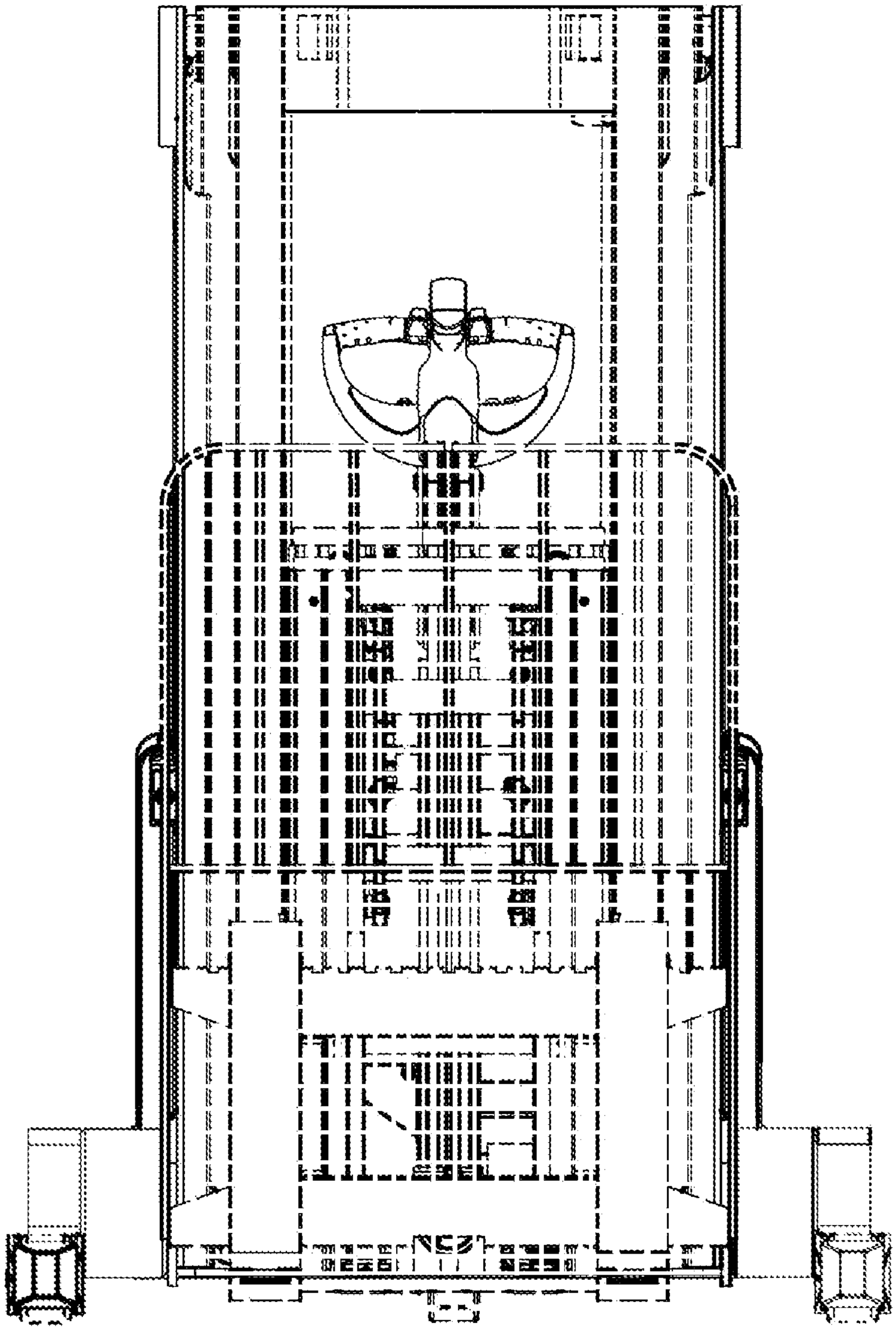

FIG. 6

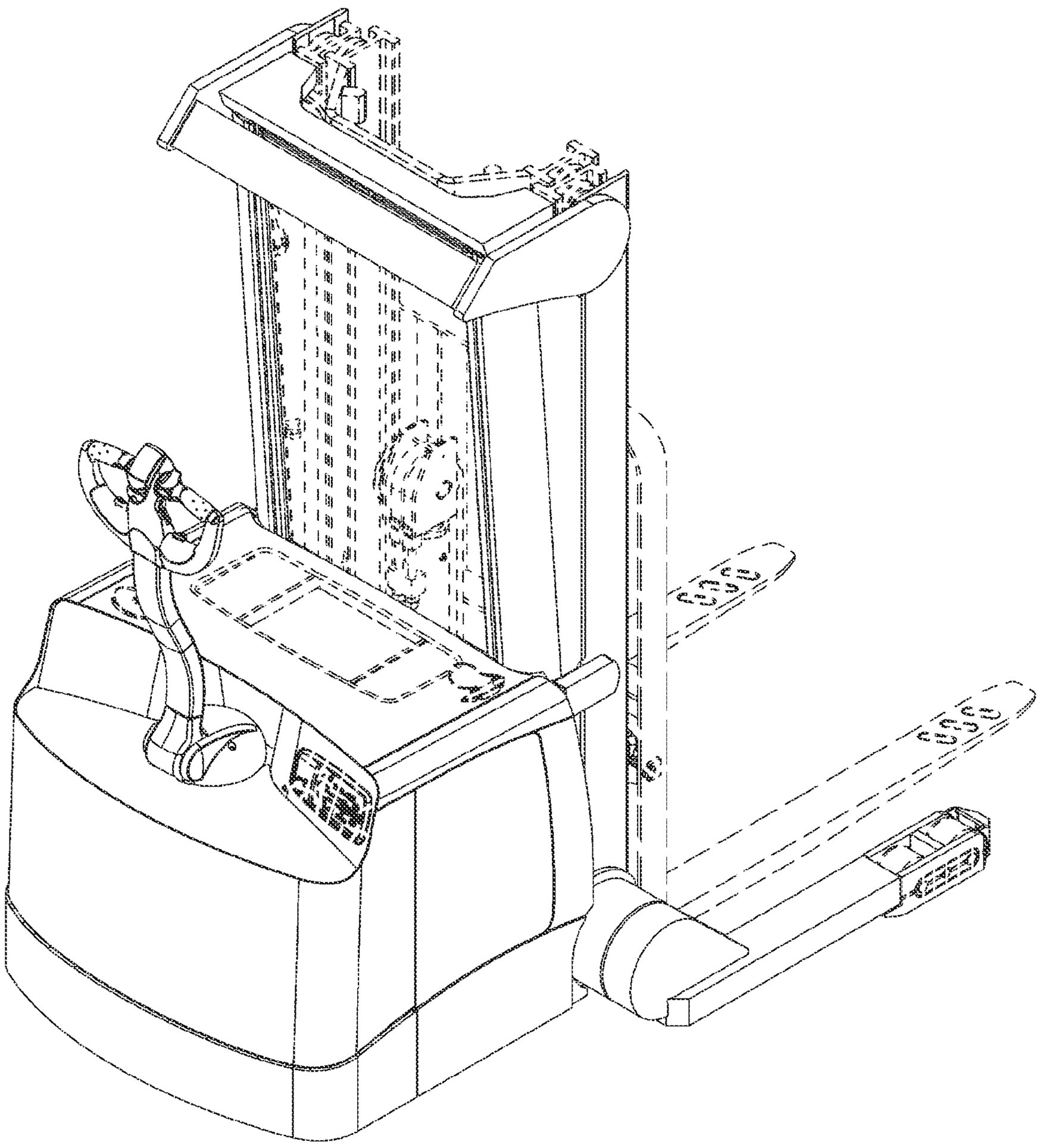

FIG. 7

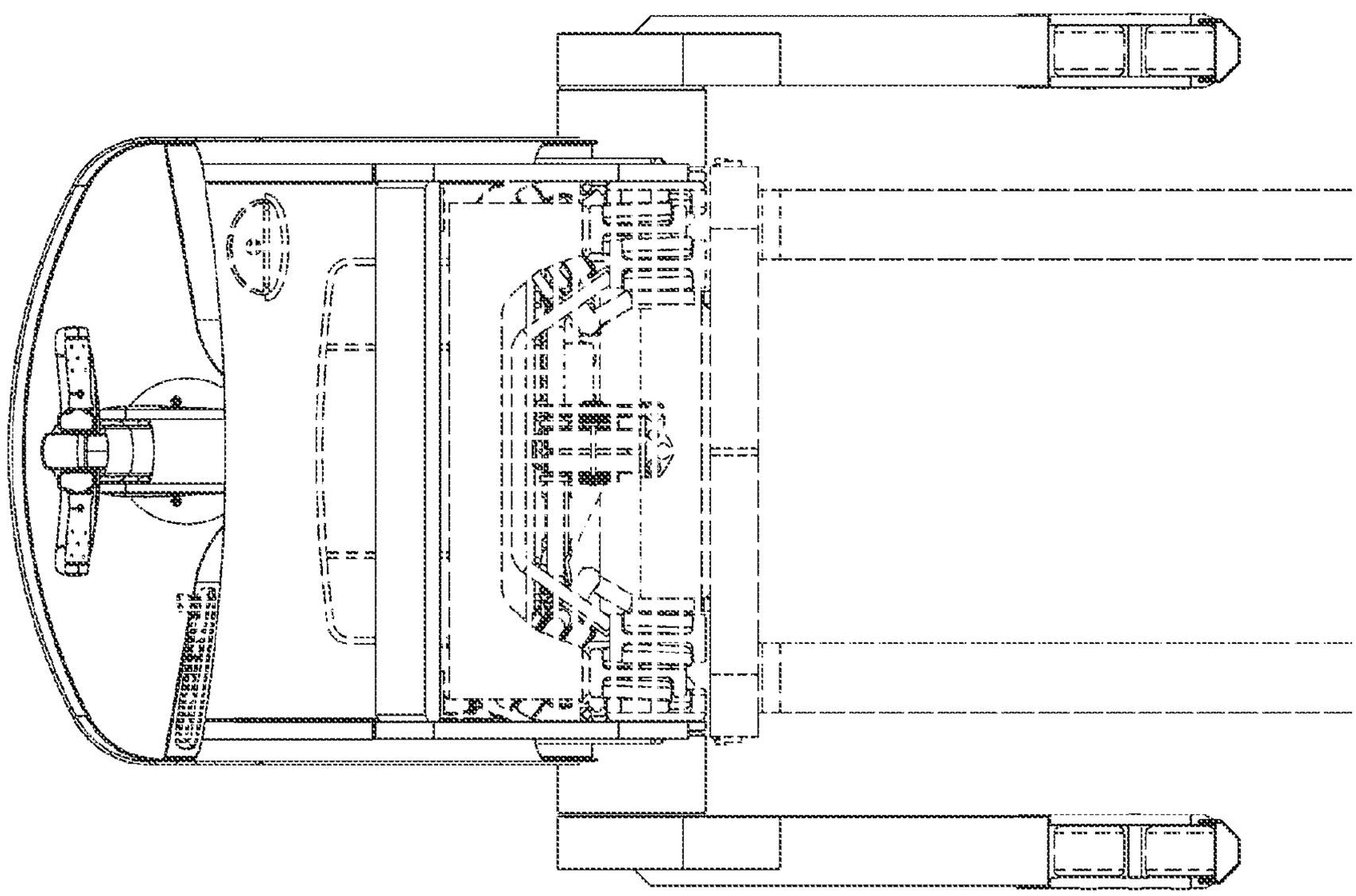

FIG. 8

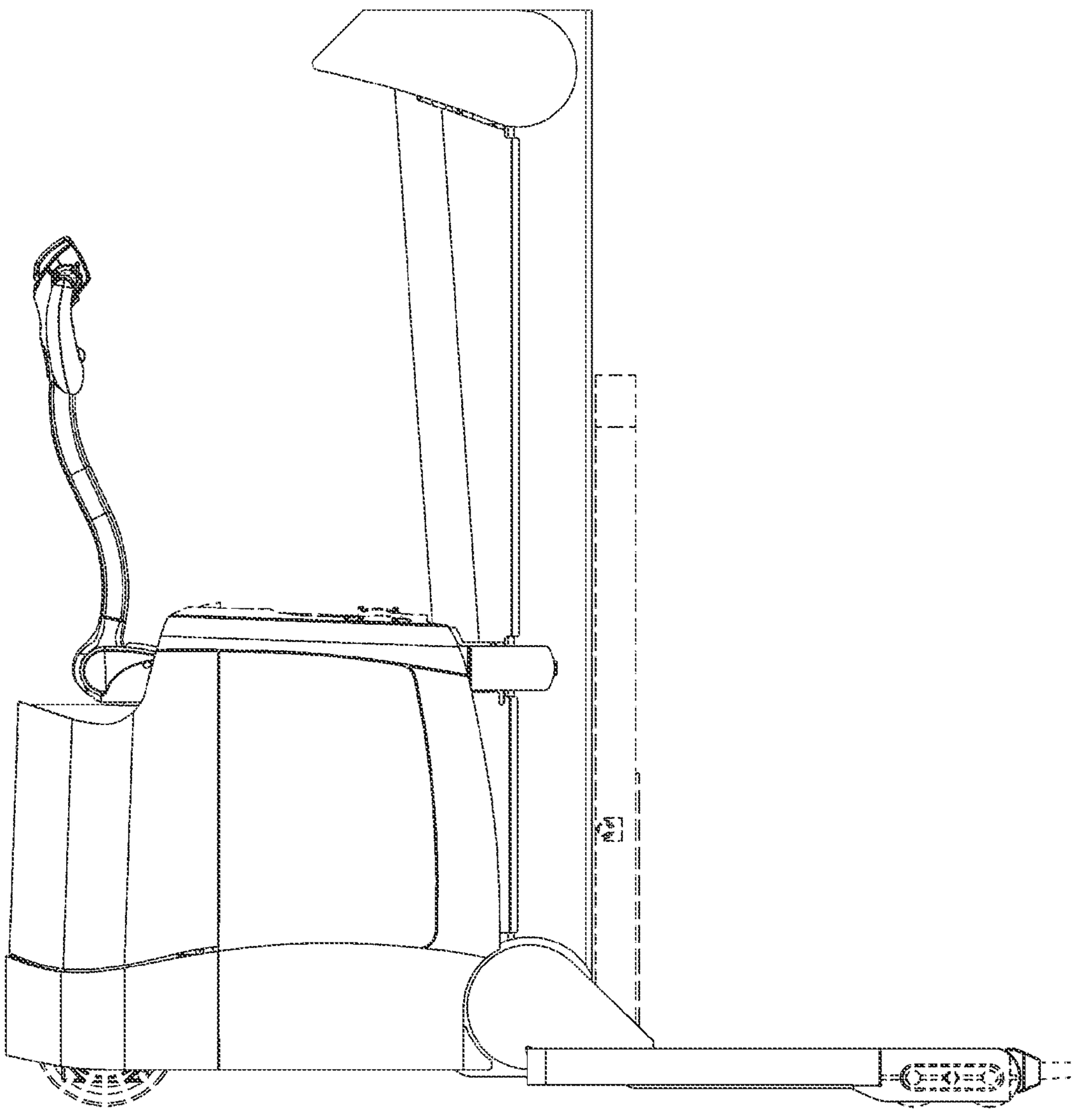

FIG. 9

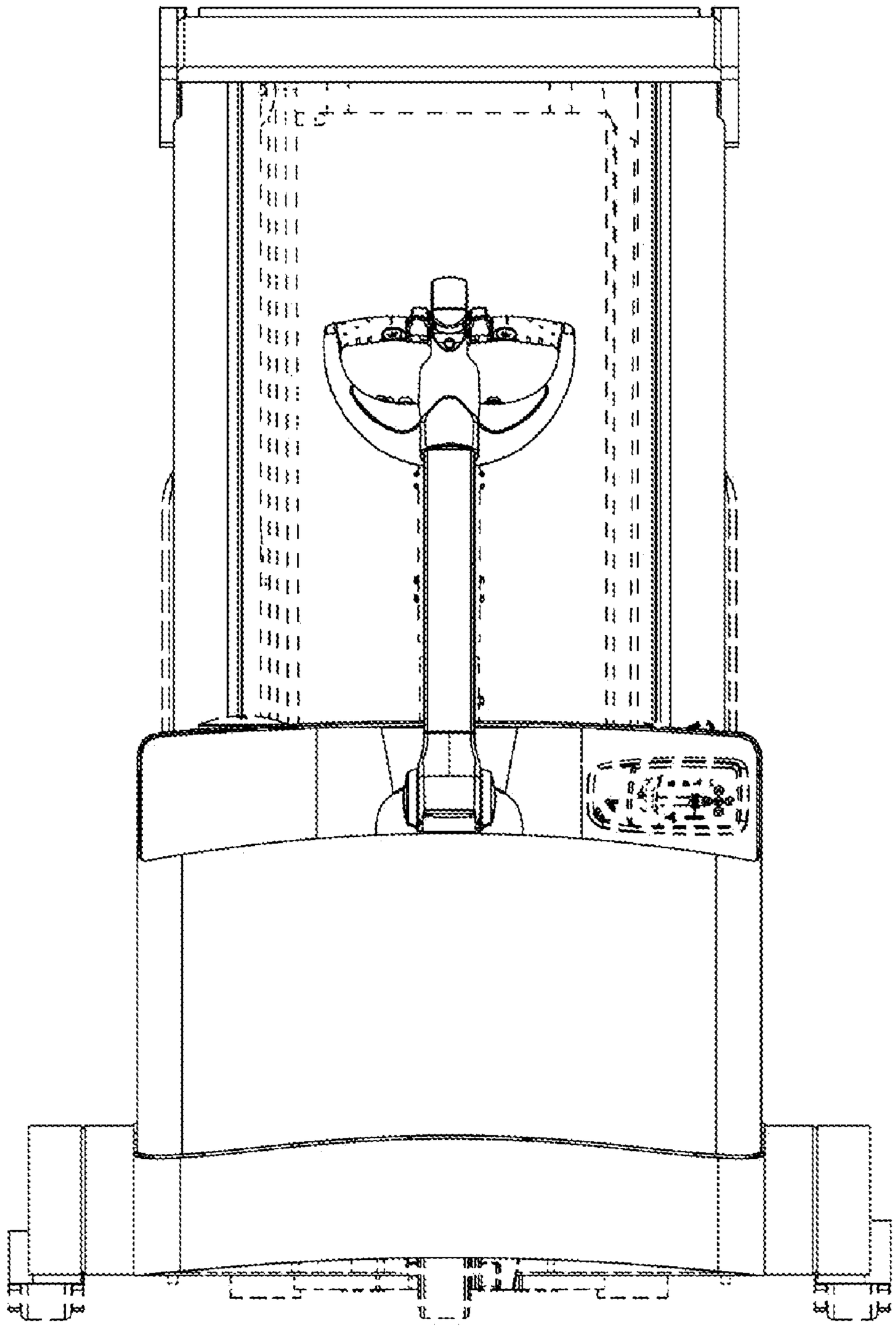
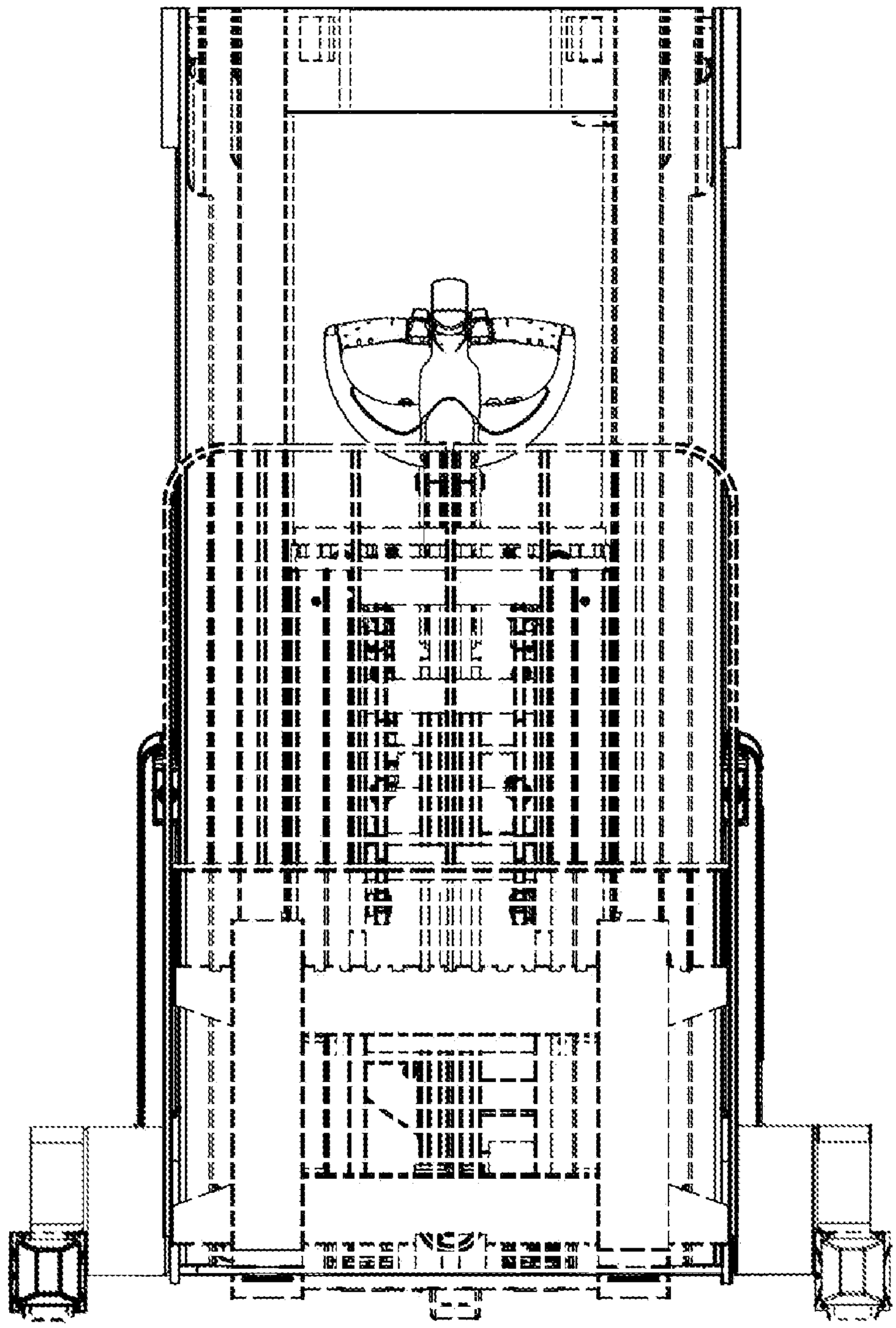
FIG. 10