US00D561958S

(12) United States Design Patent
Hahn

(10) Patent No.: US D561,958 S
(45) Date of Patent: ** Feb. 12, 2008

(54) **STEAM IRON**

(76) Inventor: **Gyung Hee Hahn**, #401, Miwon 2cha Apartment, 433-9, Mangwon 2-dong, Mapo-gu, Seoul 121-823 (KR)

(**) Term: **14 Years**

(21) Appl. No.: **29/266,855**

(22) Filed: **Sep. 29, 2006**

(30) **Foreign Application Priority Data**

Jul. 6, 2006 (KR) 30-2006-0028728

(51) **LOC (8) Cl.** **15-05**
(52) **U.S. Cl.** **D32/17**
(58) **Field of Classification Search** ..... D32/17–18, D32/21–22, 31; 68/222, 5 A, 5 C, 6, 50; 15/320–322, 339, 344, 401, 353; 392/403–406, 392/379; 38/14, 69; 34/622; 223/51, 70; 219/211; 239/538
See application file for complete search history.

(56) **References Cited**

U.S. PATENT DOCUMENTS

D246,628	S	12/1977	Hanson et al.	
D276,473	S	11/1984	Ogawa et al.	
D284,800	S	7/1986	Cavalli	
D285,738	S	9/1986	Ogawa et al.	
D285,739	S	9/1986	Cavalli	
D312,907	S	12/1990	Davidson et al.	
D369,004	S	4/1996	Reibl	
D373,869	S	9/1996	Stutzer et al.	
5,609,047	A *	3/1997	Hellman et al.	68/222
5,687,278	A *	11/1997	Turner	392/406
D388,576	S	12/1997	Gudefin et al.	
D439,023	S	3/2001	Powell	
D451,653	S *	12/2001	Berreth et al.	D32/17
D476,124	S	6/2003	Garman	
6,886,373	B2 *	5/2005	Carrubba et al.	68/222
D511,232	S	11/2005	Barquin Santillan et al.	
D530,871	S	10/2006	Chu	
D530,873	S	10/2006	Poon	
D531,369	S	10/2006	Archer et al.	
D531,372	S	10/2006	Poon	
D531,773	S	11/2006	Leung	
D531,774	S	11/2006	Grossi	
D532,171	S	11/2006	Berthier	

* cited by examiner

Primary Examiner—Ruth McInroy
(74) *Attorney, Agent, or Firm*—Black Lowe & Graham PLLC

(57) **CLAIM**

I claim the ornamental design for a steam iron, as shown and described.

DESCRIPTION

FIG. **1** is a perspective view of a steam iron;

FIG. **2** is a front view of the steam iron;

FIG. **3** is a rear view of the steam iron;

FIG. **4** is a left side view of the steam iron;

FIG. **5** is a right side view of the steam iron;

FIG. **6** is a top plan view of the steam iron;

FIG. **7** is a bottom plan view of the steam iron;

FIG. **8** is a first reference view of the steam iron in use; and,

FIG. **9** is a second reference view of the steam iron in use.

The details shown in broken lines in FIGS. **8** and **9** form no part of the claimed design. The hose is shown broken away in FIGS. **8** and **9** for ease of illustration and is fully represented in the other views.

1 Claim, 8 Drawing Sheets

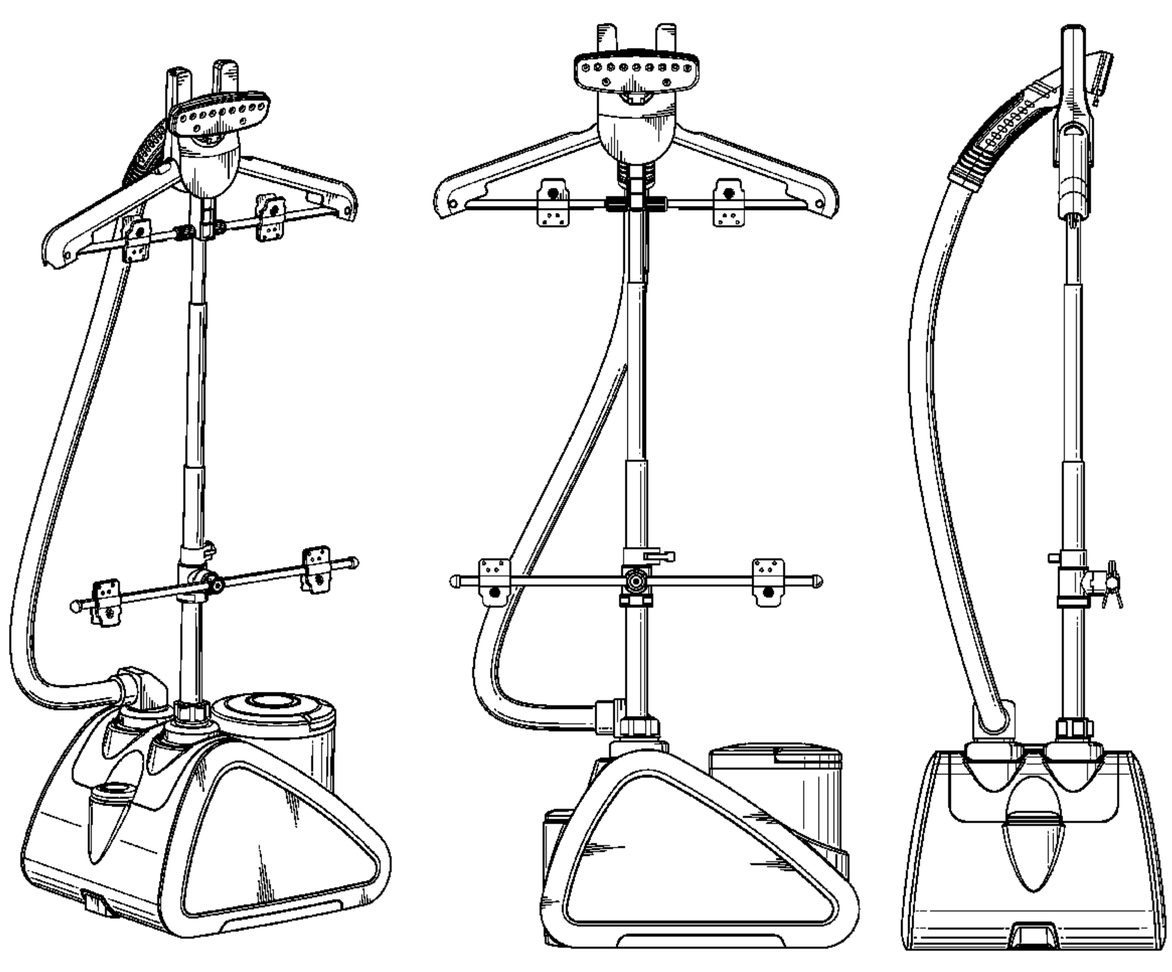

FIG.1

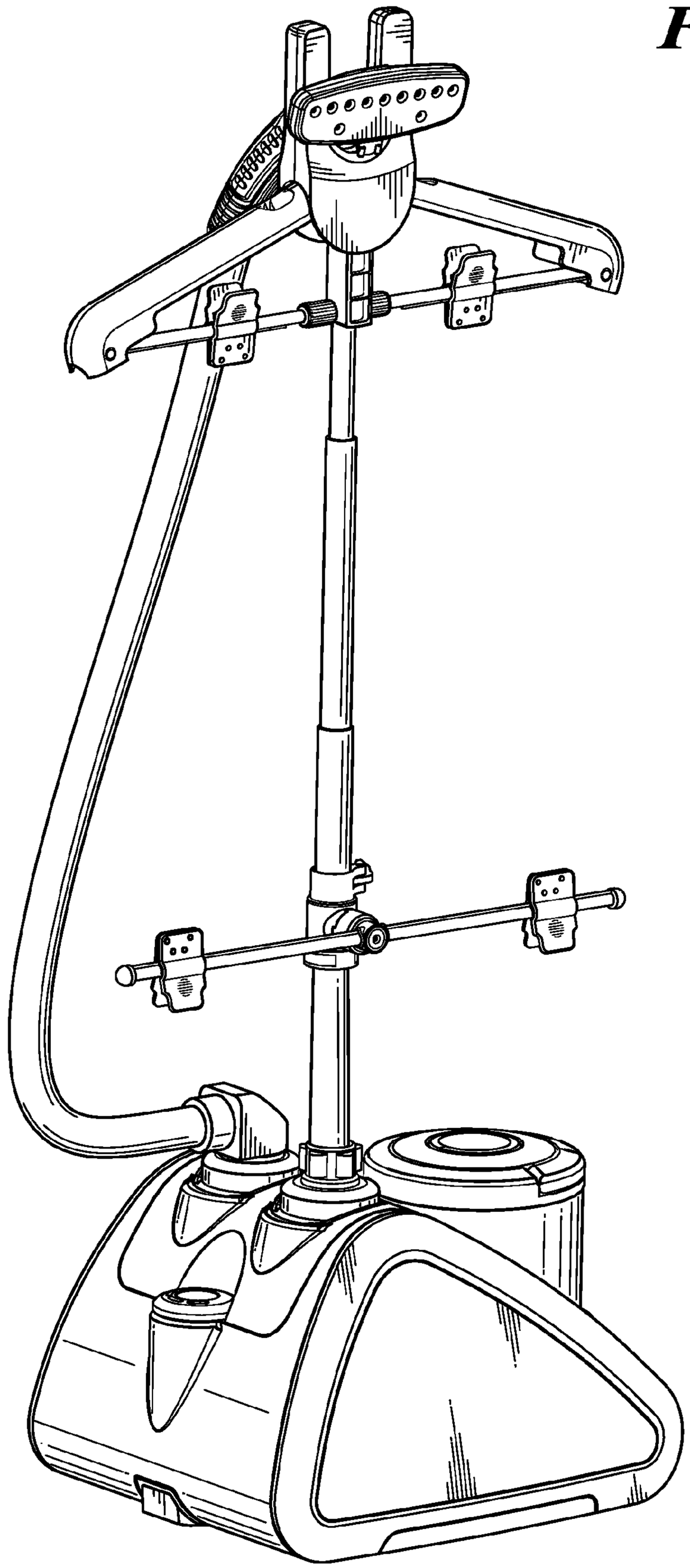

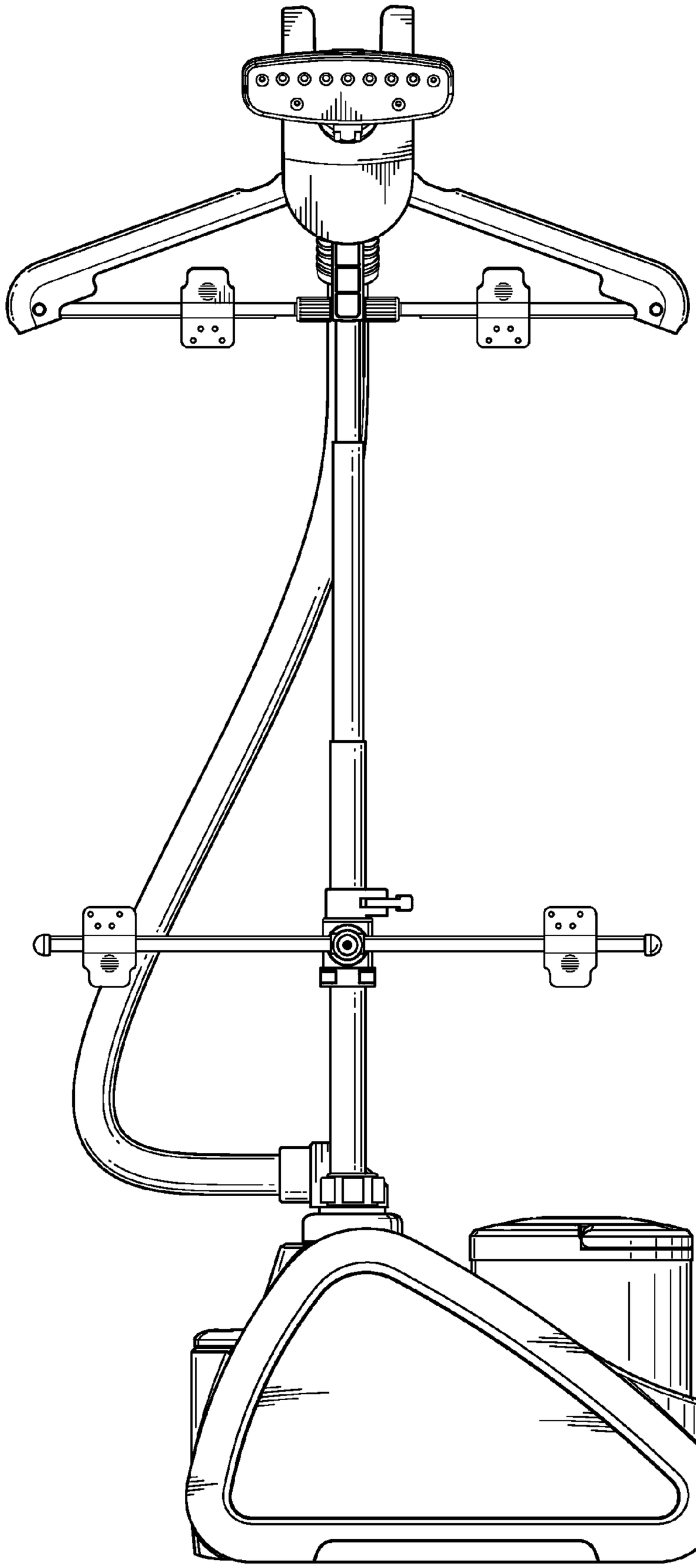

FIG.2

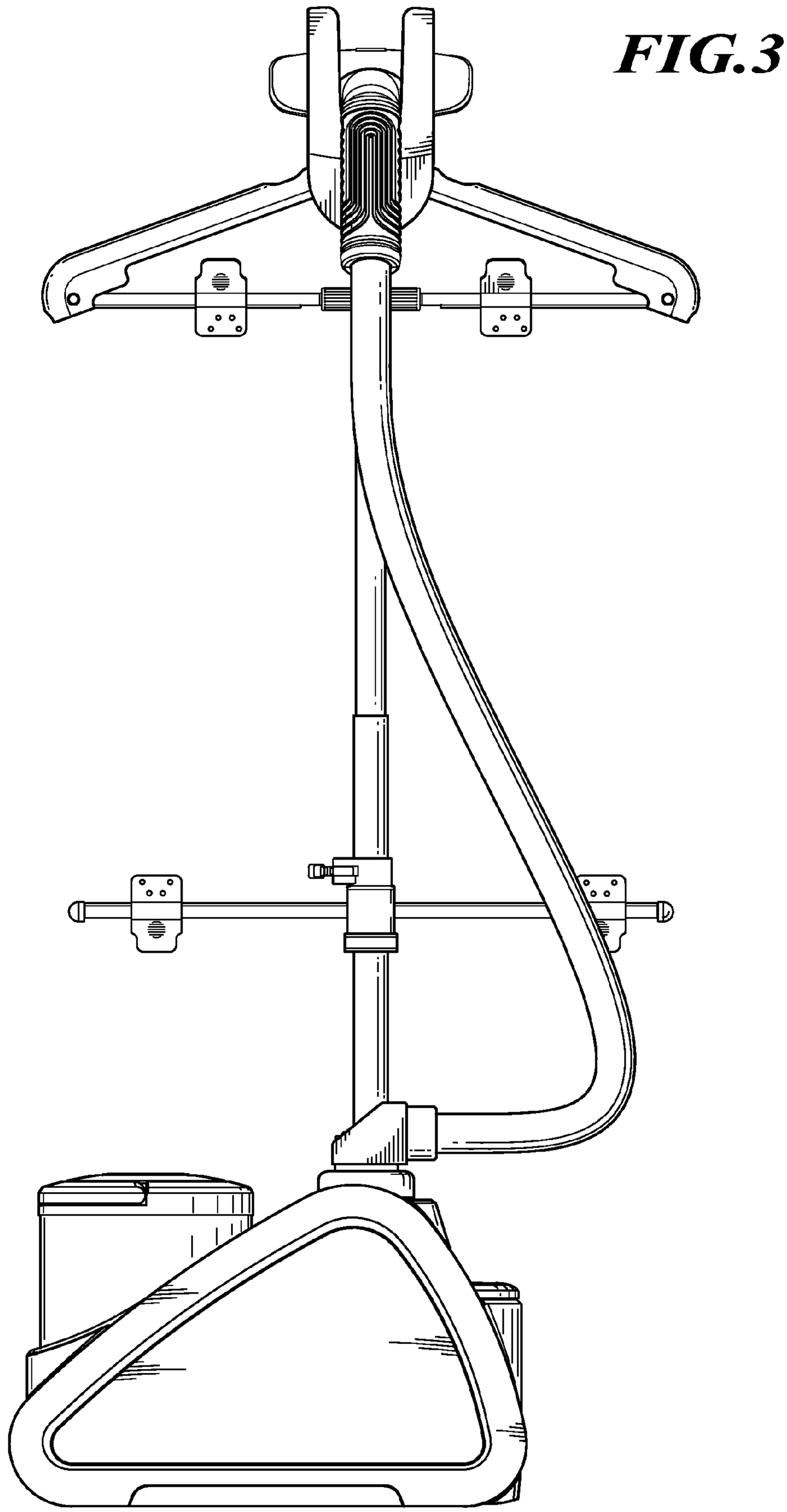

FIG.3

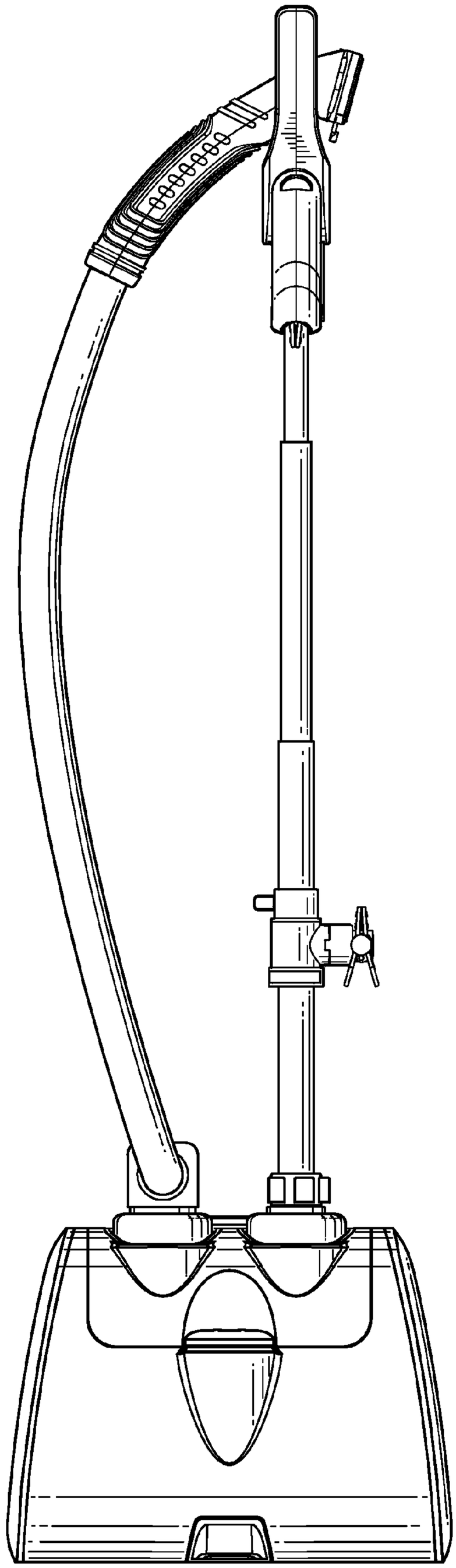

FIG. 4

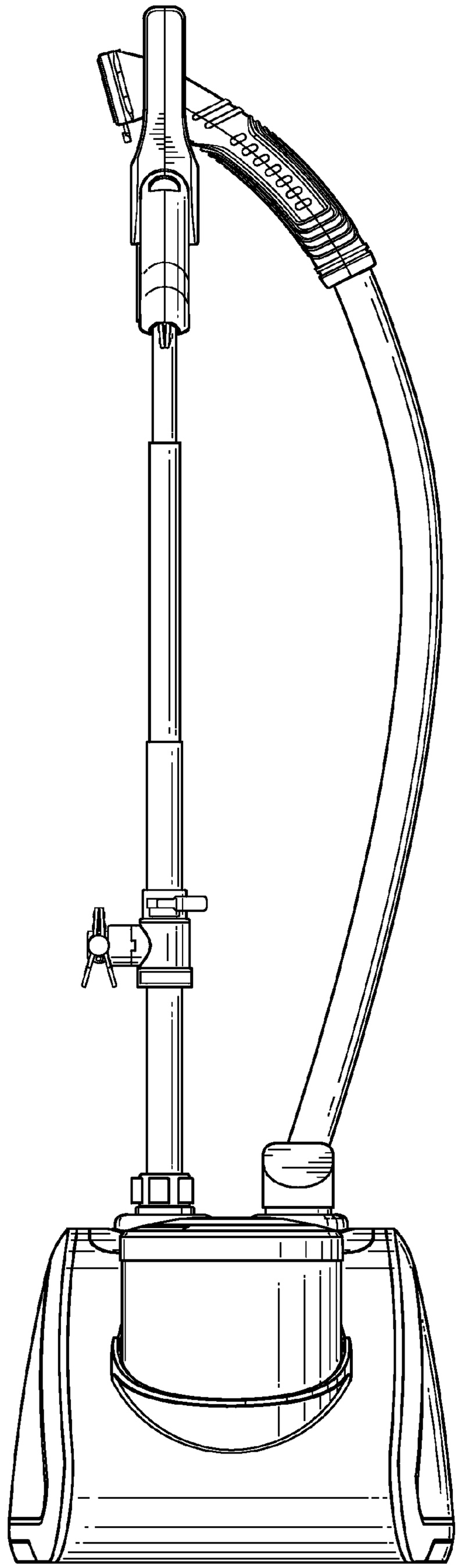

FIG.5

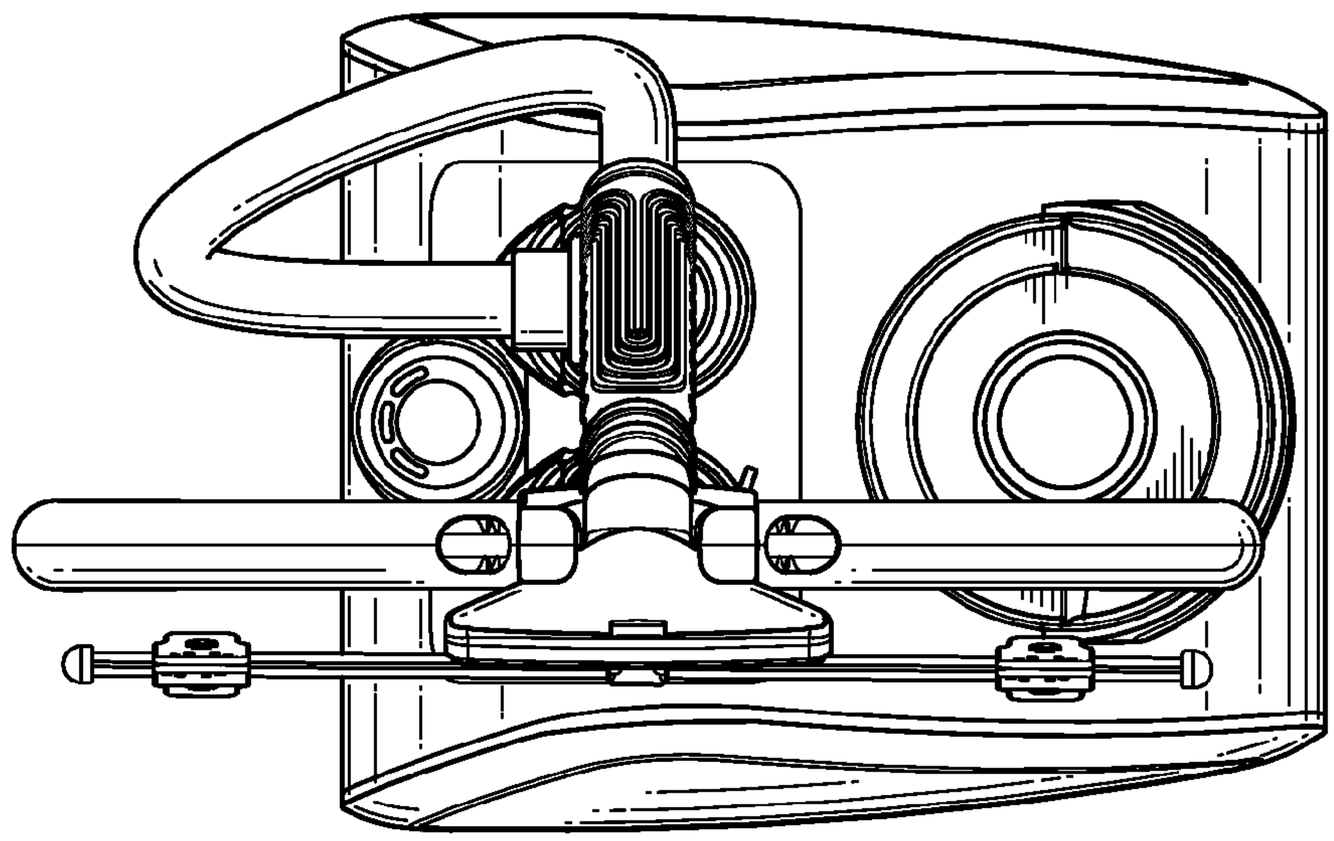

FIG. 6

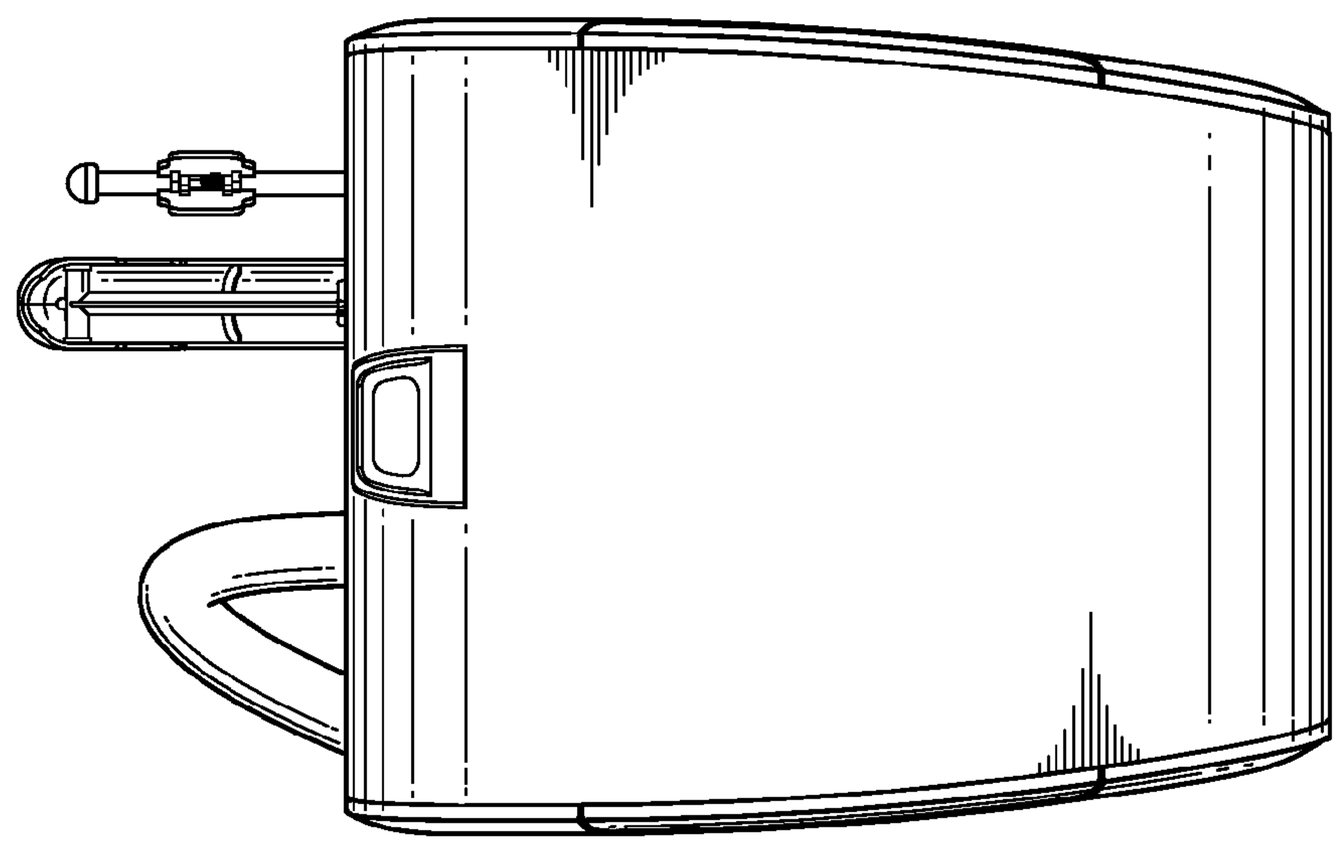

FIG. 7

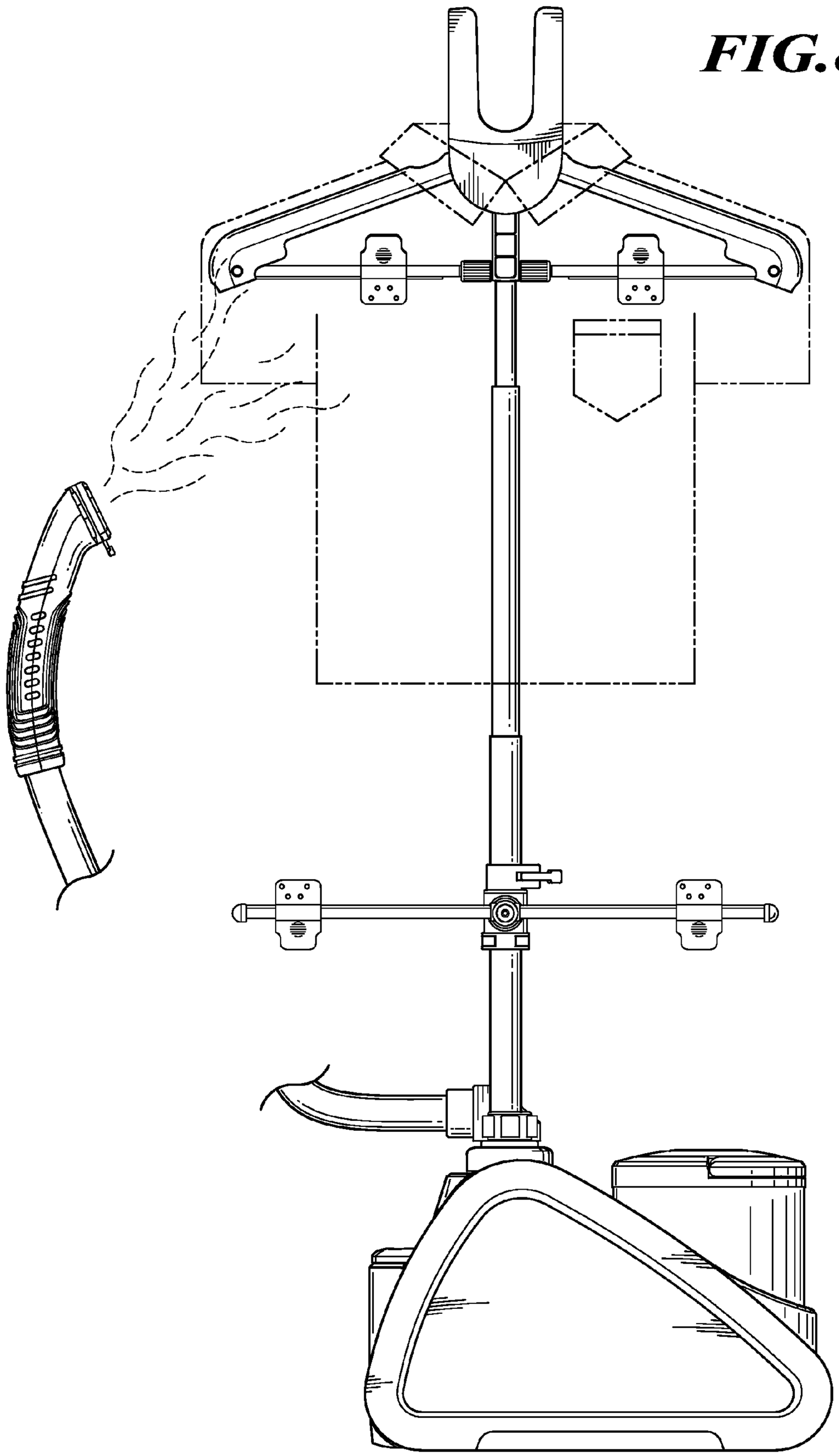

FIG. 8

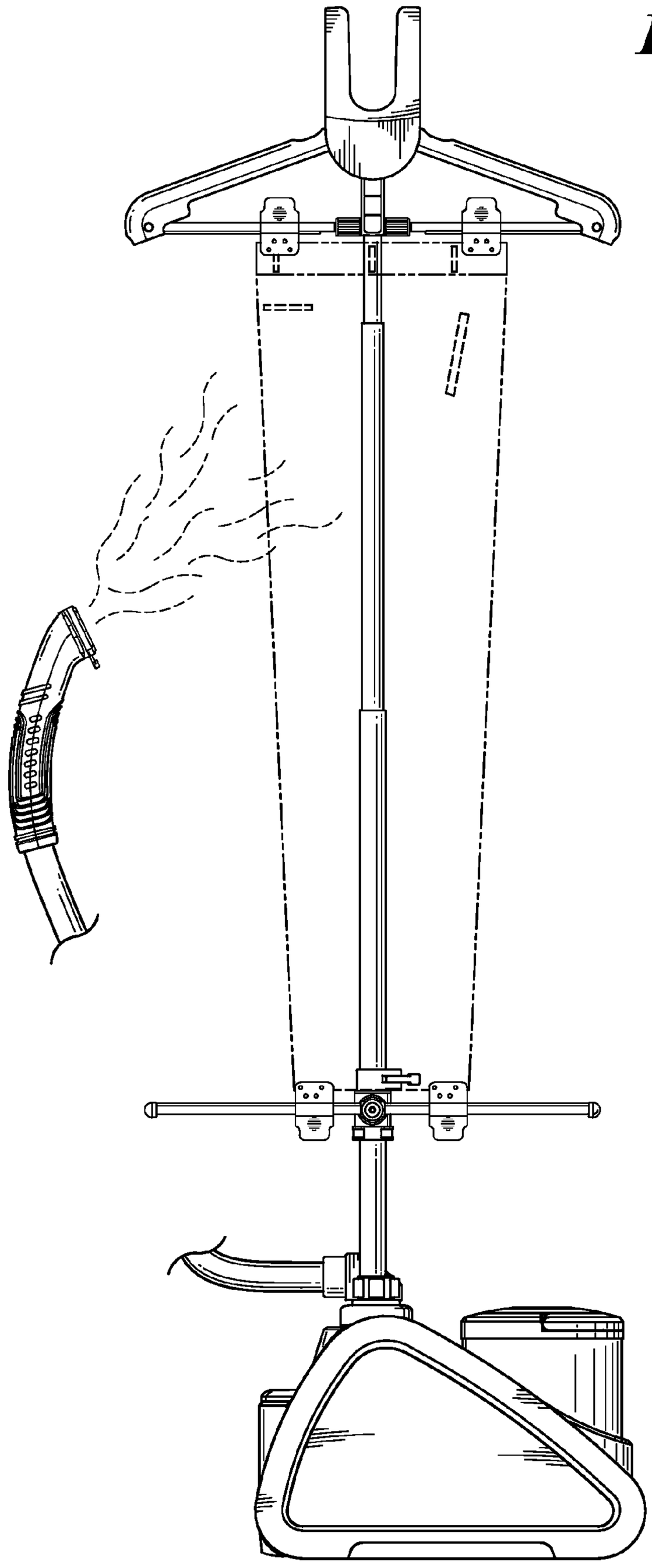

FIG. 9