US00D558888S

(12) United States Design Patent
Ware

(10) Patent No.: US D558,888 S
(45) Date of Patent: ** Jan. 1, 2008

(54) **REACTION BLOCK FOR CHEMICAL SYNTHESIS FOR USE UPON A HOT PLATE STIRRER**

(75) Inventor: **Steve Ware**, Tabernacle, NJ (US)

(73) Assignee: **Chemglass, Inc.**, Vineland, NJ (US)

(**) Term: **14 Years**

(21) Appl. No.: **29/237,279**

(22) Filed: **Aug. 30, 2005**

(51) **LOC (8) Cl.** **24-02**
(52) **U.S. Cl.** **D24/216**
(58) **Field of Classification Search** D24/216–230; 422/99–102, 104, 64, 72; 366/274; D15/147
See application file for complete search history.

(56) **References Cited**

U.S. PATENT DOCUMENTS

3,356,316	A		12/1967	Forehand	244/43
3,356,346	A		12/1967	Landsberger	259/71
3,594,129	A		7/1971	Jones	23/253
D233,244	S		10/1974	Quandt	D32/2
4,090,263	A		5/1978	Hoffa	366/273
4,162,855	A		7/1979	Bender	366/274
4,386,730	A	*	6/1983	Mulzet	494/81
D277,891	S	*	3/1985	Uffenheimer et al.	D24/226
4,568,195	A		2/1986	Herz et al.	366/274
D287,634	S	*	1/1987	Carr et al.	D24/230
D288,124	S	*	2/1987	Brickus et al.	D24/219
D295,963	S	*	5/1988	Conlon	D9/455
4,752,138	A		6/1988	Rufer	366/274
4,759,635	A		7/1988	MacMichael et al.	366/274
4,859,603	A	*	8/1989	Dole et al.	422/58
4,911,555	A		3/1990	Saffer et al.	366/274
D307,869	S	*	5/1990	Miskinis	D24/227
4,991,973	A		2/1991	Maaz et al.	366/141
5,496,520	A	*	3/1996	Kelton et al.	422/64
5,499,872	A		3/1996	Baxter	366/213
5,529,391	A		6/1996	Kindman et al.	366/145
5,547,280	A		8/1996	Wanninger et al.	366/274
D426,312	S	*	6/2000	Gomes	D24/220
6,905,656	B1		6/2005	Ladlow et al.	422/99
2006/0198767	A1		9/2006	Fordham	422/104

OTHER PUBLICATIONS

CG-1991 Reaction Block for Circular Top Hot Plate Stirrer, www.chemglass.com/products_news/np-reactionblcok.html; 1 pg., 2005.
Drysyn Clean Synthesis From Asynt & Pharmacore; www.asynt.com/archive/drysyn-usa.html; 1 pg., 2005.
Asynt News; www.asynt.com/archive/news.html; 4 pgs., 2005.
Jepson Bolton's International Catalogue; Stirrers; www.jepbol.com/sect4/stirika.html; 5 pgs., 2005.

(Continued)

Primary Examiner—Joel A. Sincavage
Assistant Examiner—Anhdao Doan
(74) *Attorney, Agent, or Firm*—Fitzpatrick, Cella, Harper & Scinto

(57) **CLAIM**

I claim the ornamental design for a reaction block for chemical synthesis for use upon a hot plate stirrer, as shown and described.

DESCRIPTION

FIG. **1** is a top perspective view of a reaction block for chemical synthesis for use upon a hot plate stirrer showing my new design;

FIG. **2** is a top plan view thereof;

FIG. **3** is a bottom plan view thereof;

FIG. **4** is a front side elevation view thereof;

FIG. **5** is a rear side elevation thereof;

FIG. **6** is a left side elevation view thereof; and,

FIG. **7** is a right side elevation view thereof.

The broken lines in the drawings, FIGS. **1**–**3**, are for illustrative purposes only and form no part of the claimed design.

The characteristic feature of the design resides in a round reaction block for accepting round bottom flasks and adapters.

1 Claim, 5 Drawing Sheets

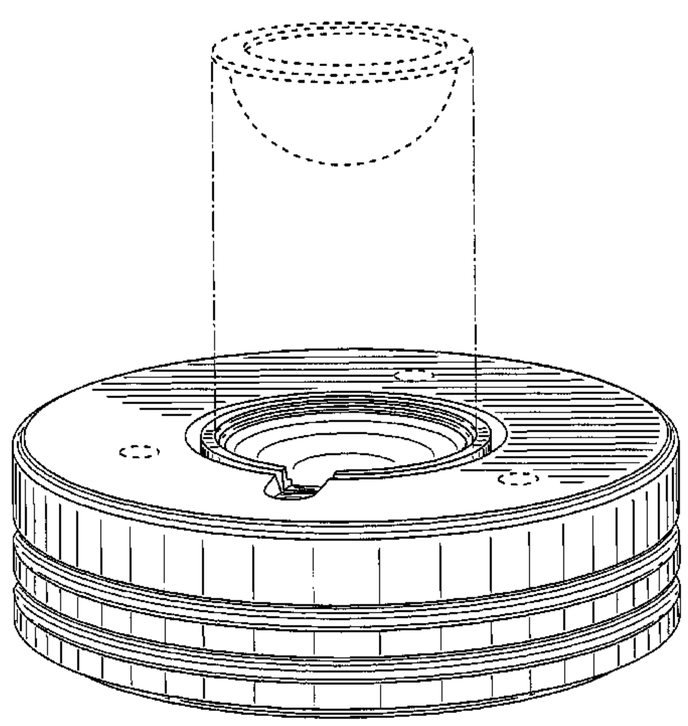

OTHER PUBLICATIONS

IKA—Works Product; Divtech Equipment Co.; www.divtechequipment.com/rect_basic.html; 1 pg., 2005.
Heidolph, "Parallel Synthesis", Heidolph Instruments GmbH & Co. KG, www.heidolph.com, pp. 1, 2, 5-14., publication date prior to Oct. 2006.
Website screen printout, publication date approx. 2002, (printed Feb. 2, 2005), 5 pgs. http://www.glass-solutions.co.uk/acatalog/Online_Catalogue_HEAT_ON_Blocks_4.html.
Radleys, "Custom designed glass reaction systems", www.radleys.co.uk, publication date approx. 2005, pp. 1-2.

* cited by examiner

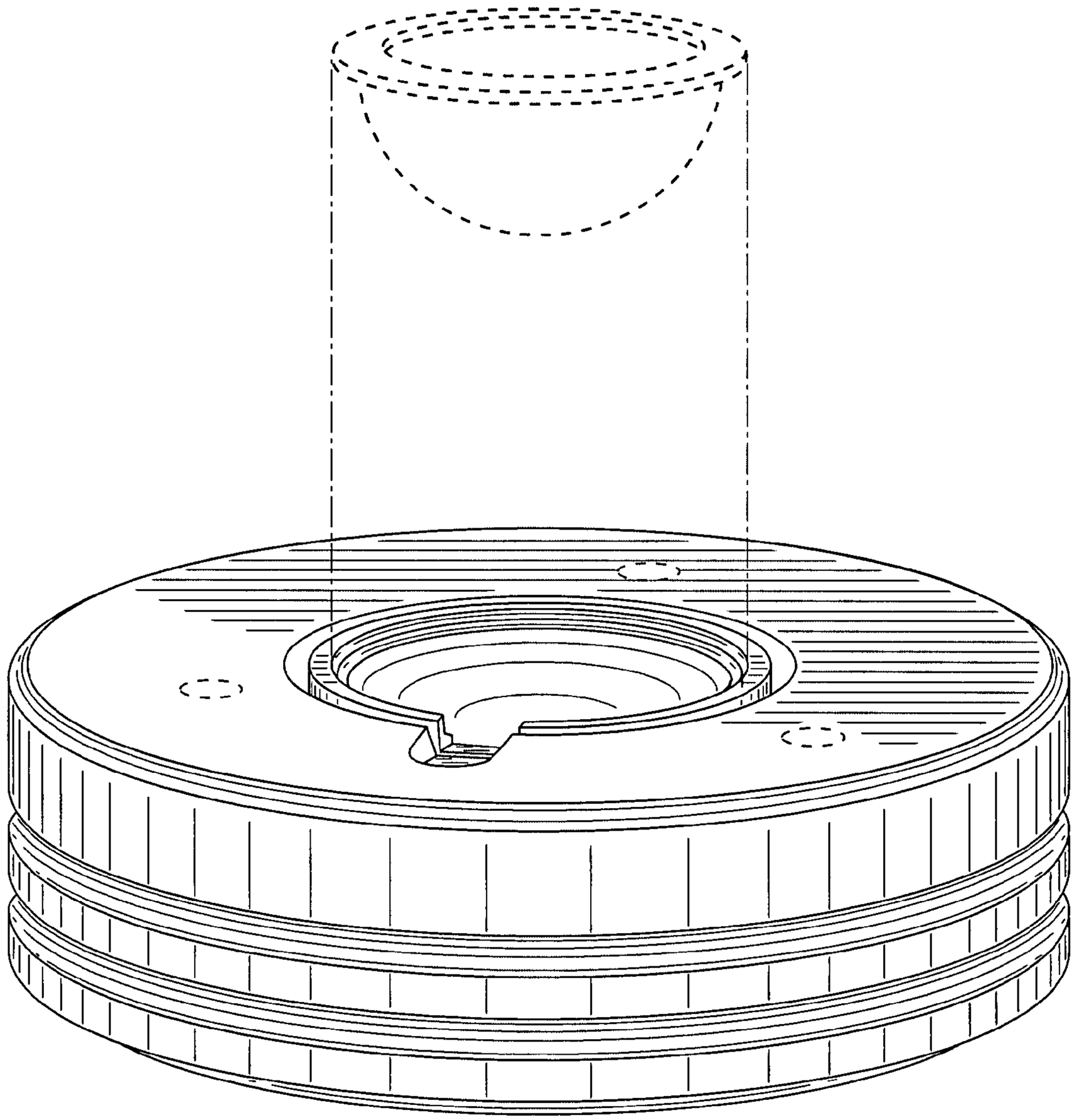

FIG. 1

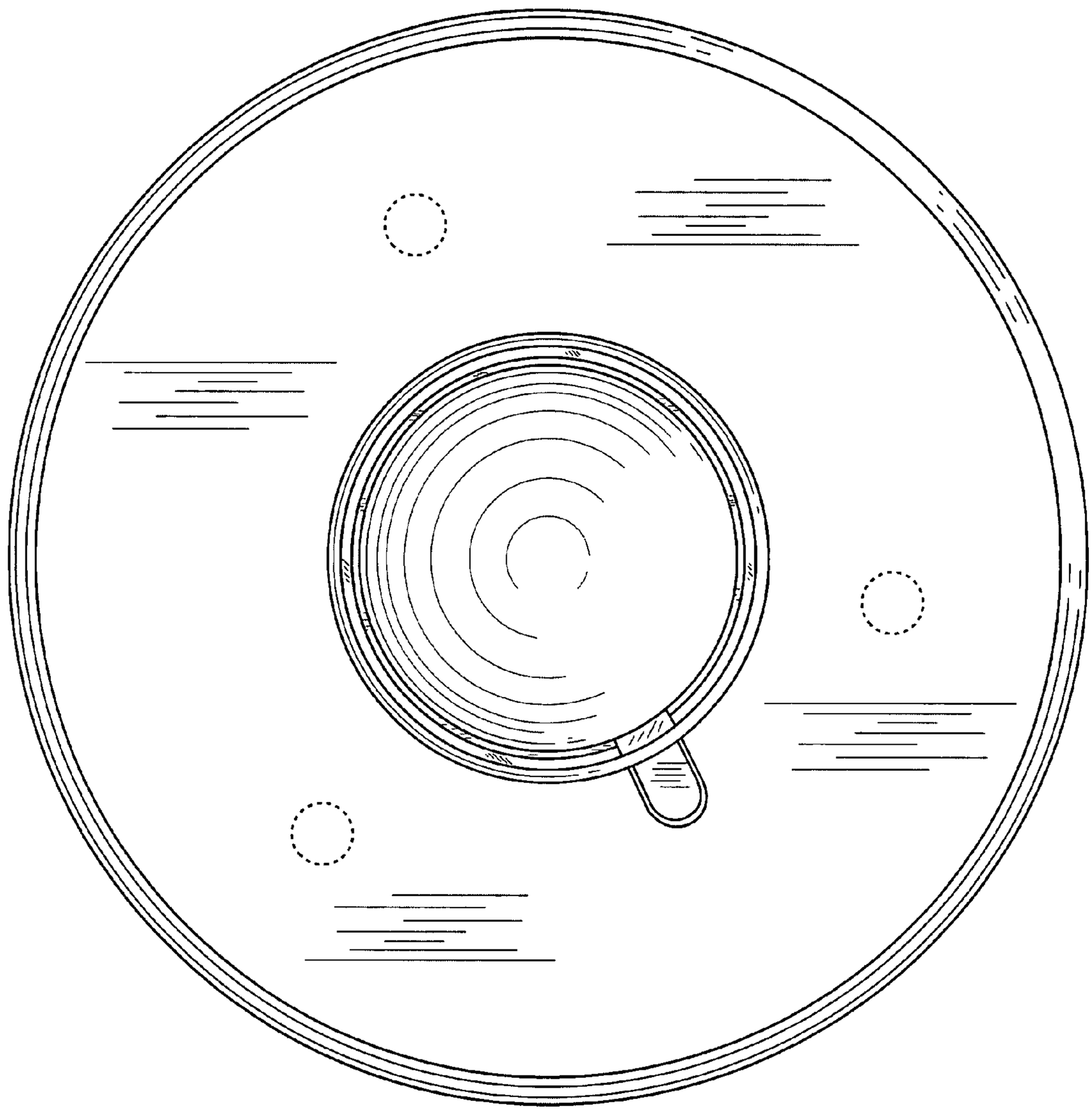

FIG. 2

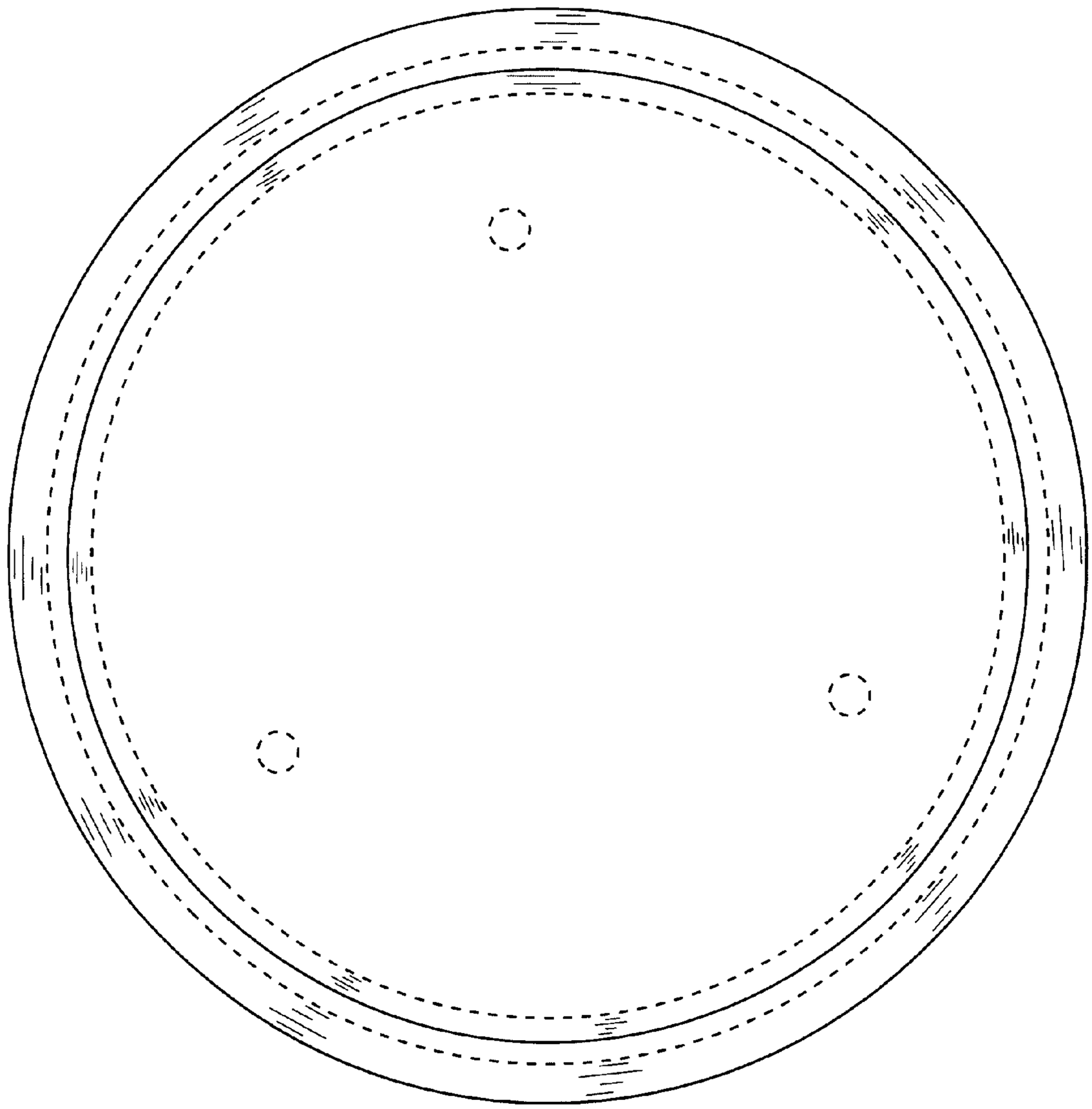

FIG. 3

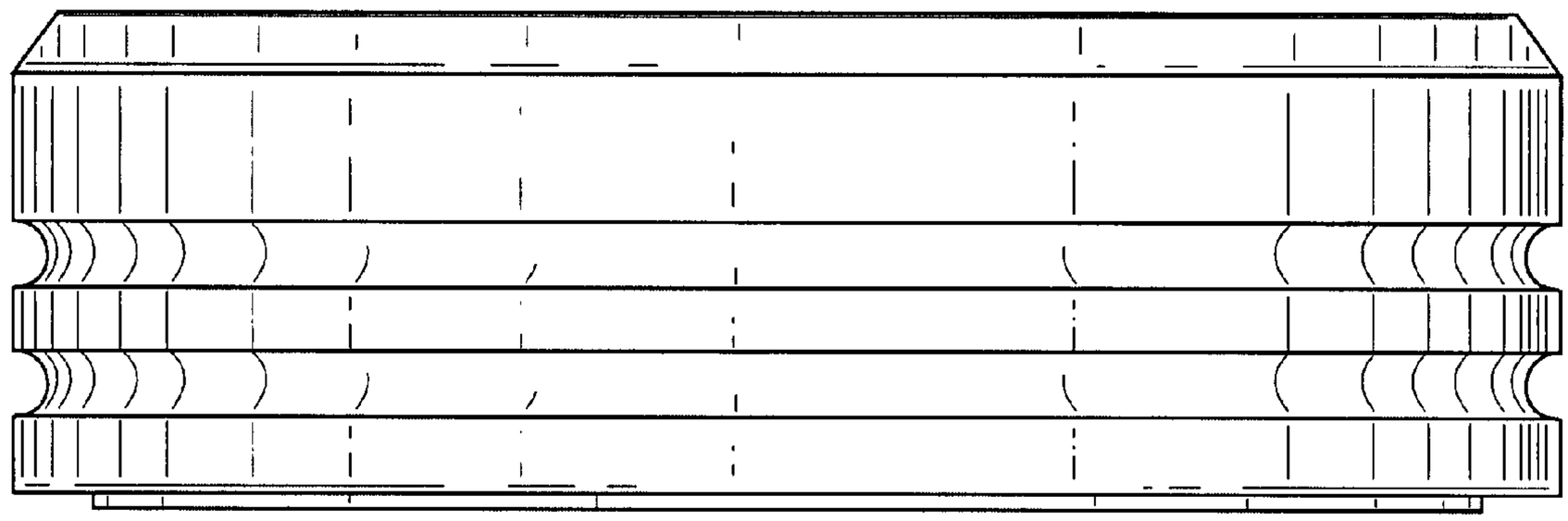

FIG. 4

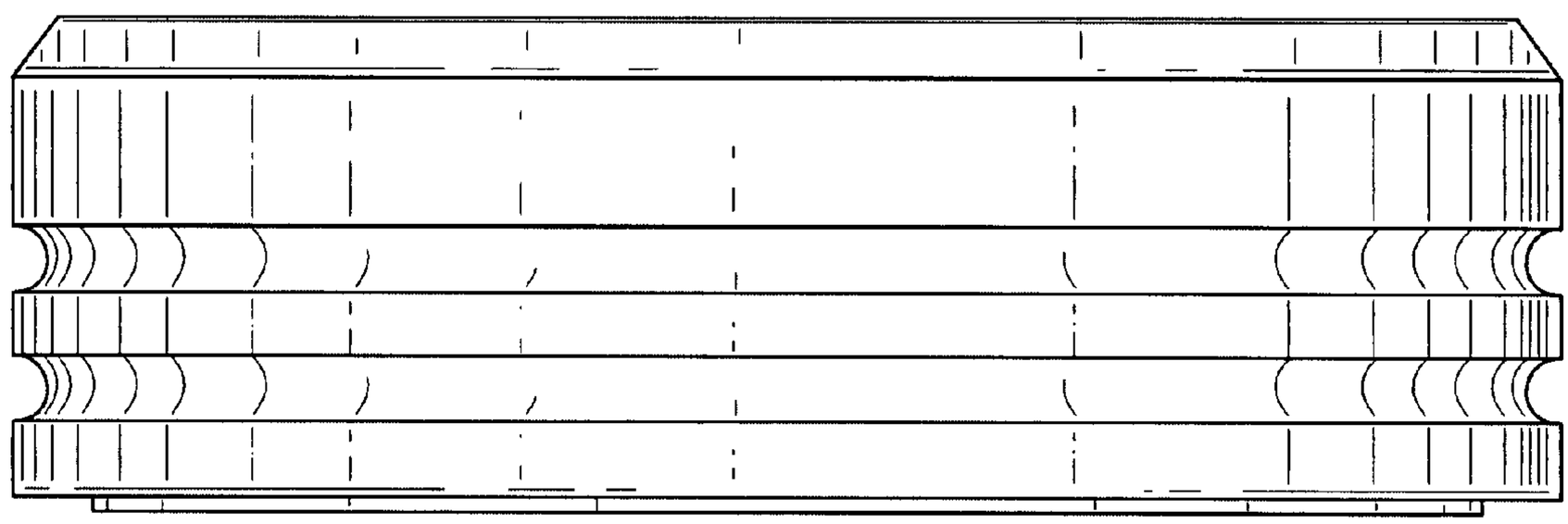

FIG. 5

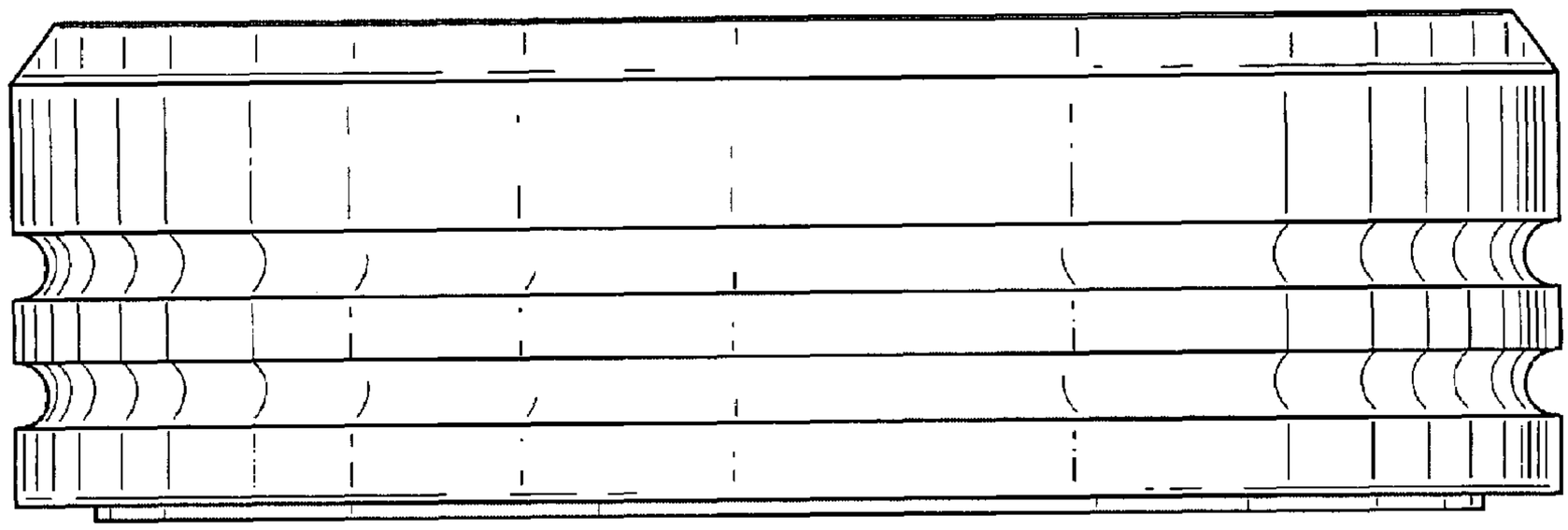

FIG. 6

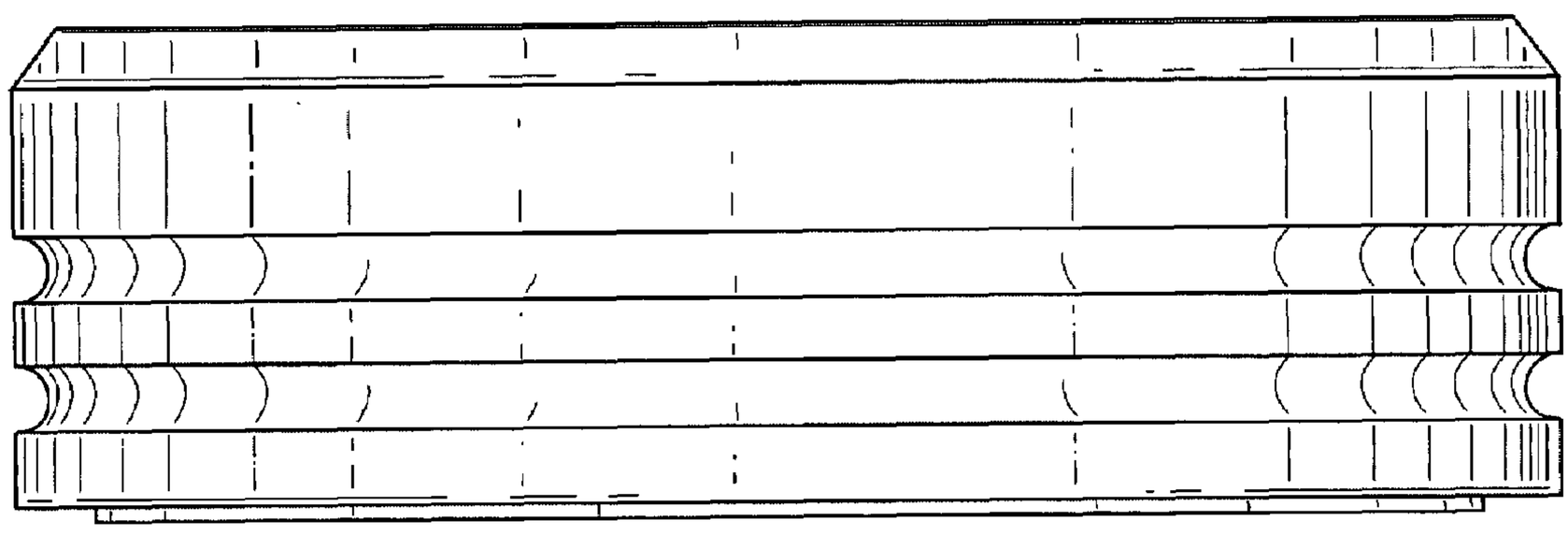

FIG. 7