US00D558043S

(12) United States Design Patent

Kiser

(10) Patent No.: US D558,043 S
(45) Date of Patent: ** Dec. 25, 2007

(54) **CLAM SHELL PACKAGING**

(75) Inventor: **Kenneth Kirby Kiser**, Nunda, NY (US)

(73) Assignee: **Crosman Corporation**, East Bloomfield, NY (US)

(**) Term: **14 Years**

(21) Appl. No.: **29/246,636**

(22) Filed: **Apr. 28, 2006**

(51) **LOC (8) Cl.** **09-03**

(52) **U.S. Cl.** **D9/418**; D9/415

(58) **Field of Classification Search** D9/414–433, D9/457, 701, 341–348, 730–762, 304, 227; 206/461–471, 495, 806; D22/108, 199
See application file for complete search history.

(56) **References Cited**

U.S. PATENT DOCUMENTS

D338,619	S		8/1993	Mylander et al.
D359,447	S		6/1995	Mylander et al.
D365,022	S	*	12/1995	Wada D9/415
D372,291	S		7/1996	Watley
D399,737	S		10/1998	Zuhlke, Jr. et al.
D432,410	S		10/2000	Schwartz
D480,964	S	*	10/2003	Lee D9/415
D502,867	S	*	3/2005	Koizumi D9/415
2004/0149616	A1	*	8/2004	Briscoe 206/461

* cited by examiner

Primary Examiner—Stella M. Reid
Assistant Examiner—Susan E Krakower
(74) *Attorney, Agent, or Firm*—Michael J. Didas, Esq.; Brian B. Shaw, Esq.; Harter Secrest & Emery LLP

(57) **CLAIM**

The ornamental design for a clam shell packaging, as shown and described.

DESCRIPTION

FIG. **1** is a perspective view of a clam shell packaging showing the present design;

FIG. **2** is a left side elevational view thereof;

FIG. **3** is a front elevational view thereof;

FIG. **4** is a rear elevational view thereof;

FIG. **5** is a top plan view thereof;

FIG. **6** is a bottom plan view thereof; and,

FIG. **7** is a right side elevational view thereof.

The broken line showing of a die cut for hanging, magazine clip and rounded canister is included for the purpose of illustrating structural environment and forms no part of the claimed design.

1 Claim, 5 Drawing Sheets

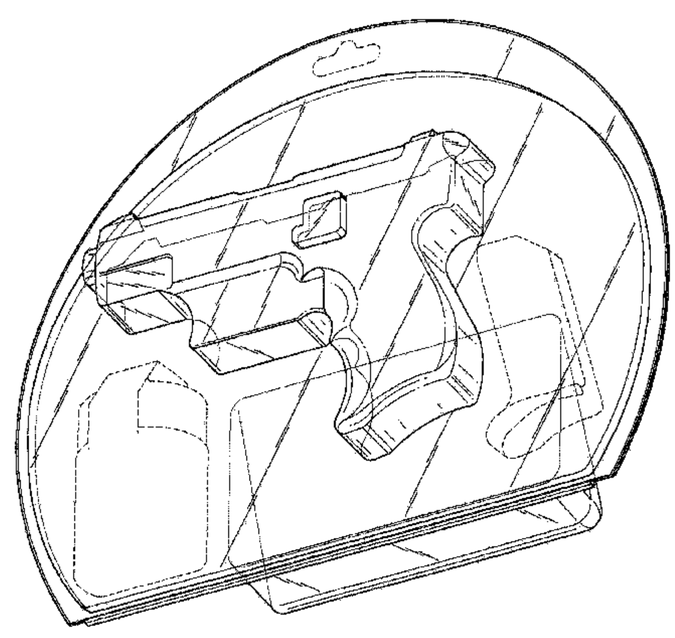

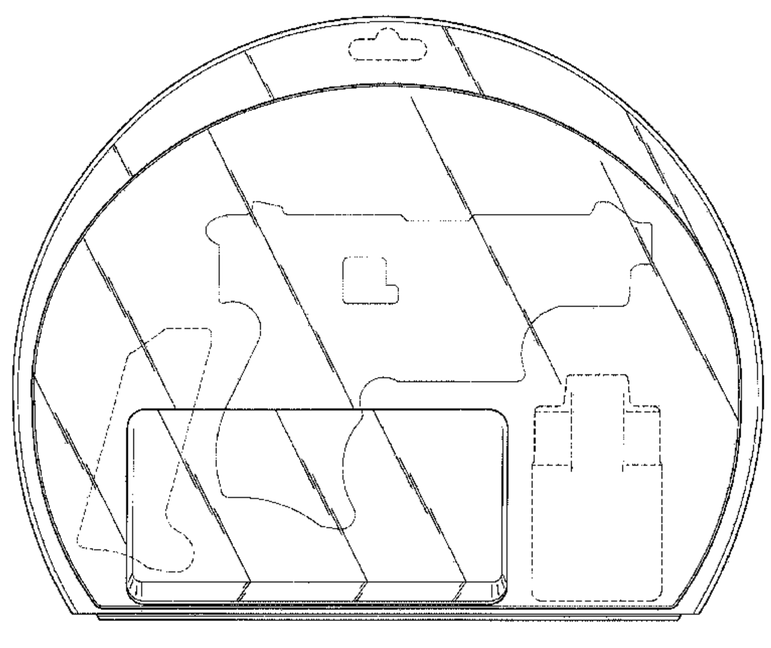

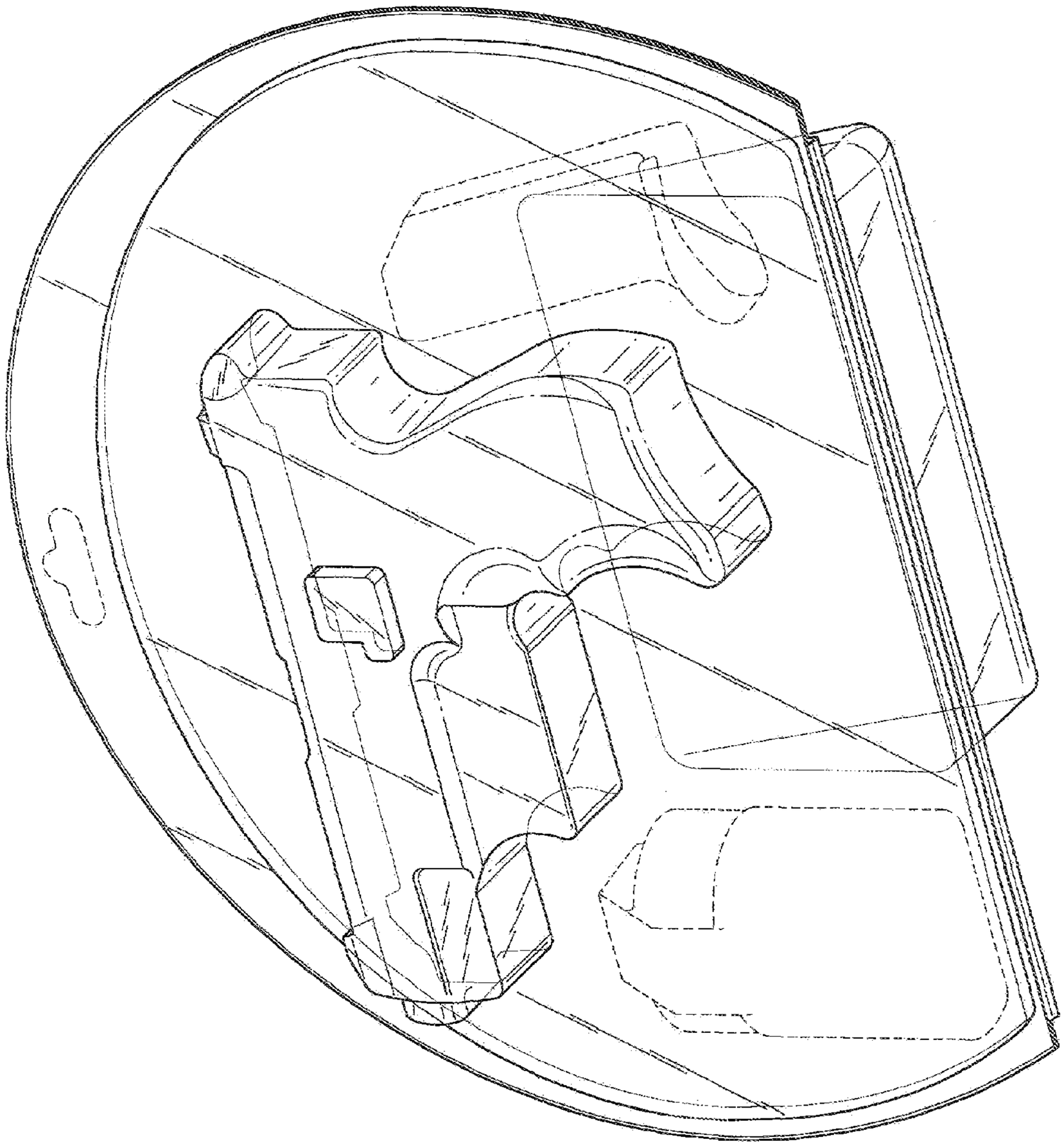

FIG. 1

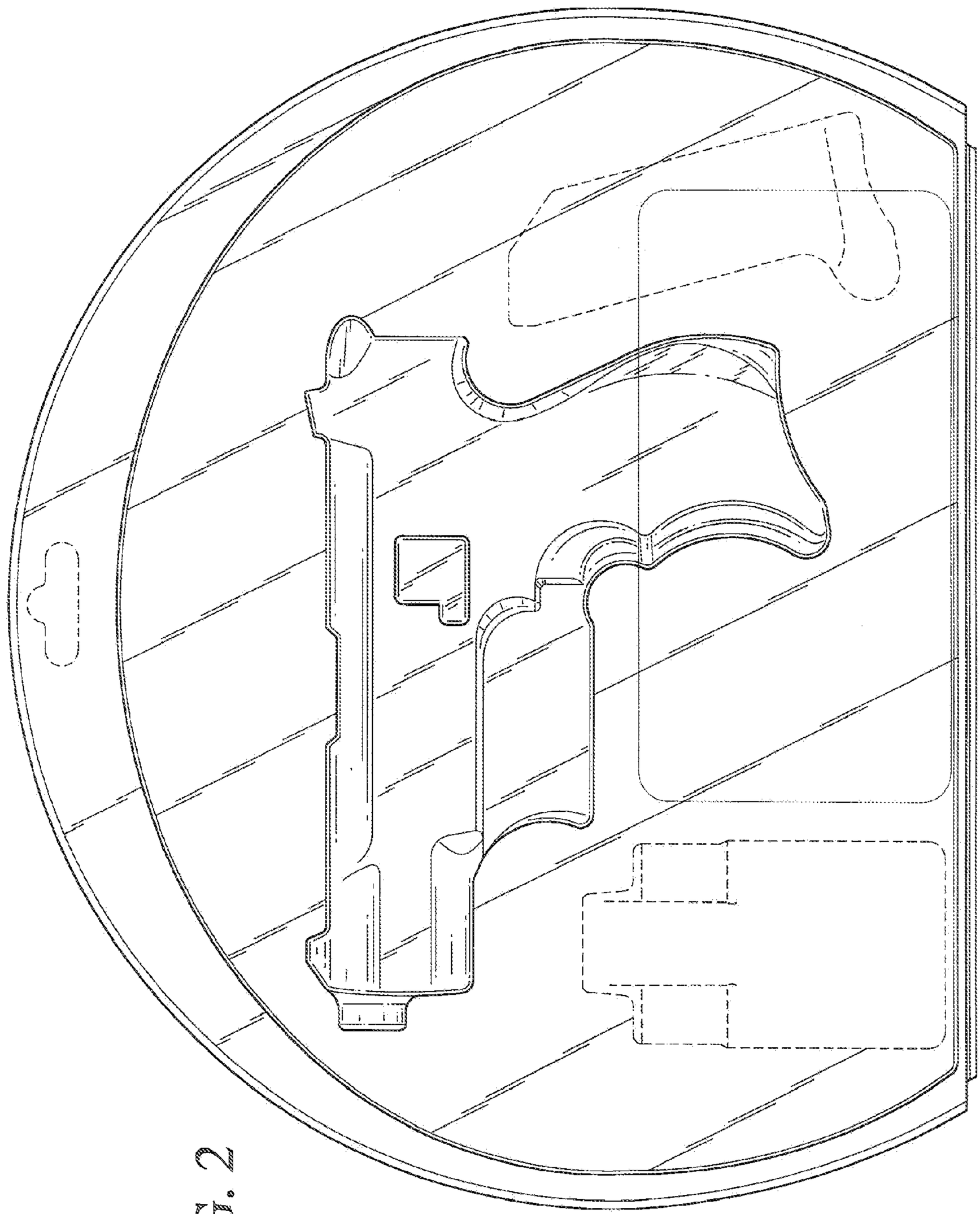

FIG. 2

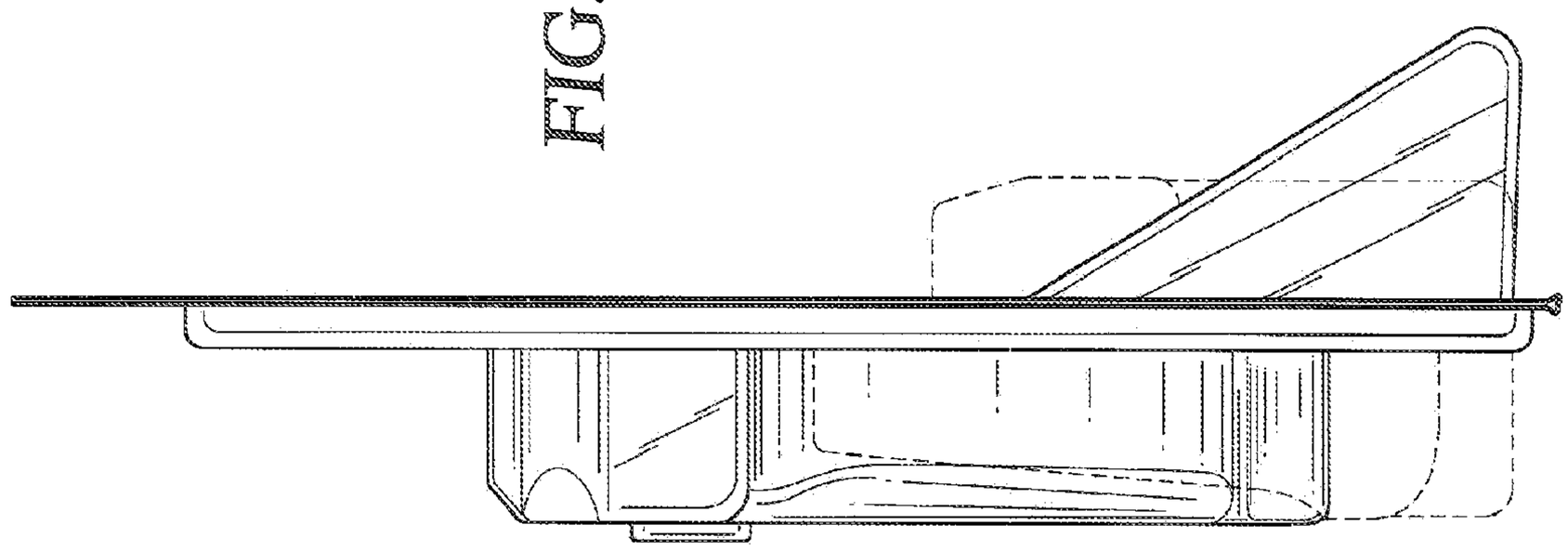

FIG. 4

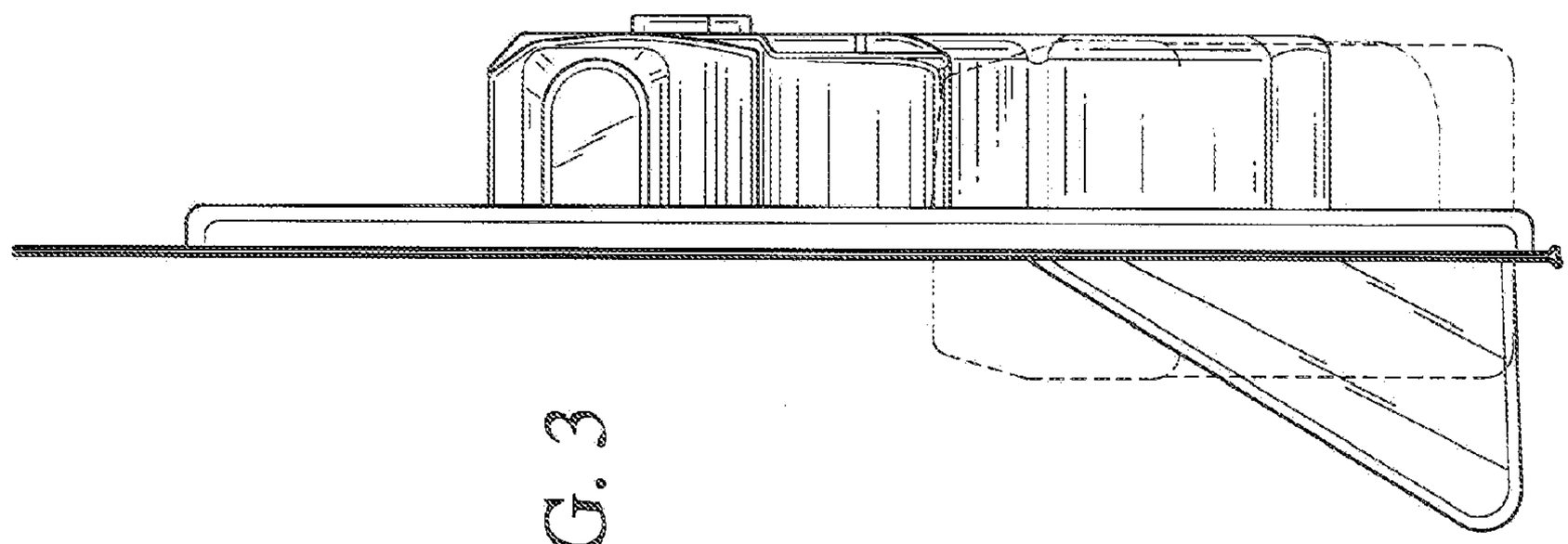

FIG. 3

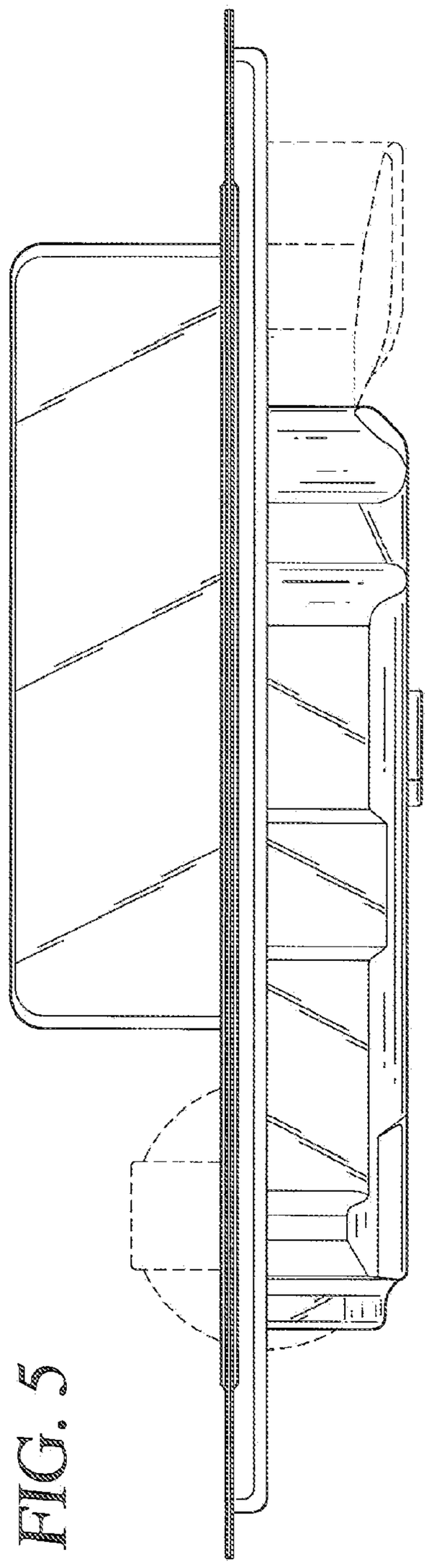

FIG. 5

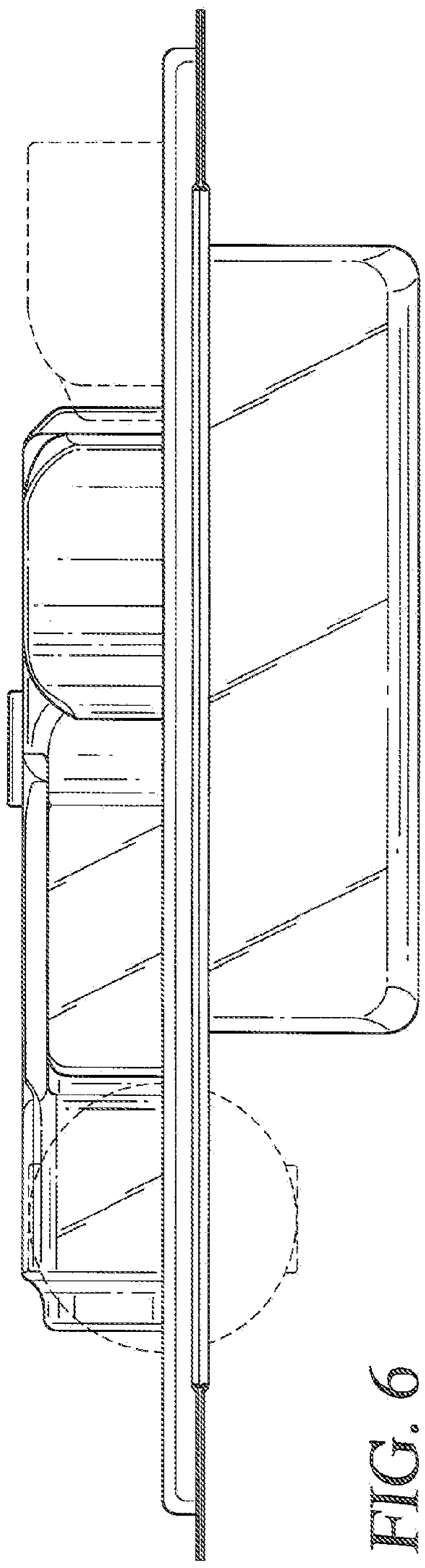

FIG. 6

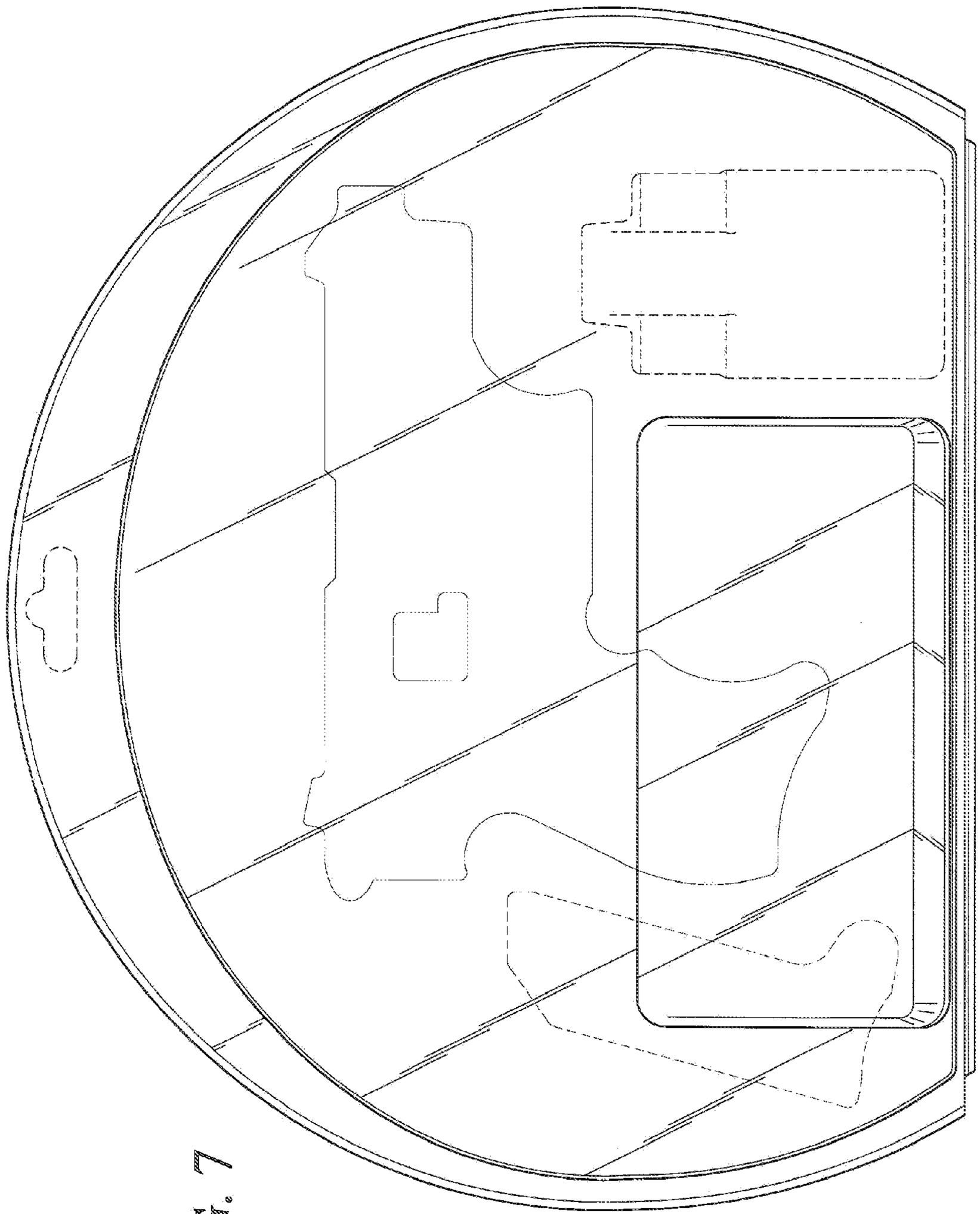

FIG. 7