US00D548052S

(12) United States Design Patent

Porter

(10) Patent No.: US D548,052 S
(45) Date of Patent: ** Aug. 7, 2007

(54) **GUTTER STAY**

(76) Inventor: **William D. Porter**, 1868 Mill Hill Rd., St. Clair, MO (US) 63077

(**) Term: **14 Years**

(21) Appl. No.: **29/232,394**

(22) Filed: **Jun. 17, 2005**

(51) **LOC (8) Cl.** **08-05**
(52) **U.S. Cl.** **D8/354**; D8/381
(58) **Field of Classification Search** D8/381, D8/354; 248/48.2, 235, 237, 245, 247; 52/15
See application file for complete search history.

(56) **References Cited**

U.S. PATENT DOCUMENTS

D369,293 S * 4/1996 Gusdorf et al. D8/381

OTHER PUBLICATIONS

AU 92961 S (Griffith Hack) Jul. 31, 1986 [online] [retrieved on May 11, 2006]. Retrieved from Australian patent database.*

* cited by examiner

Primary Examiner—Holly H. Baynham
(74) *Attorney, Agent, or Firm*—Grace J. Fishel

(57) **CLAIM**

The ornamental design for a gutter stay, as shown.

DESCRIPTION

FIG. **1** is a perspective view of a gutter stay;

FIG. **2** is a top plan view thereof;

FIG. **3** is a right side elevation view thereof, the left side being a mirror image of the right side;

FIG. **4** is a back elevation view thereof;

FIG. **5** is a front elevation view thereof; and,

FIG. **6** is a bottom plan view thereof.

The use of separations and brackets in the drawings indicate that, for ease of illustration, the precise length and width of the gutter stay is not claimed.

1 Claim, 2 Drawing Sheets

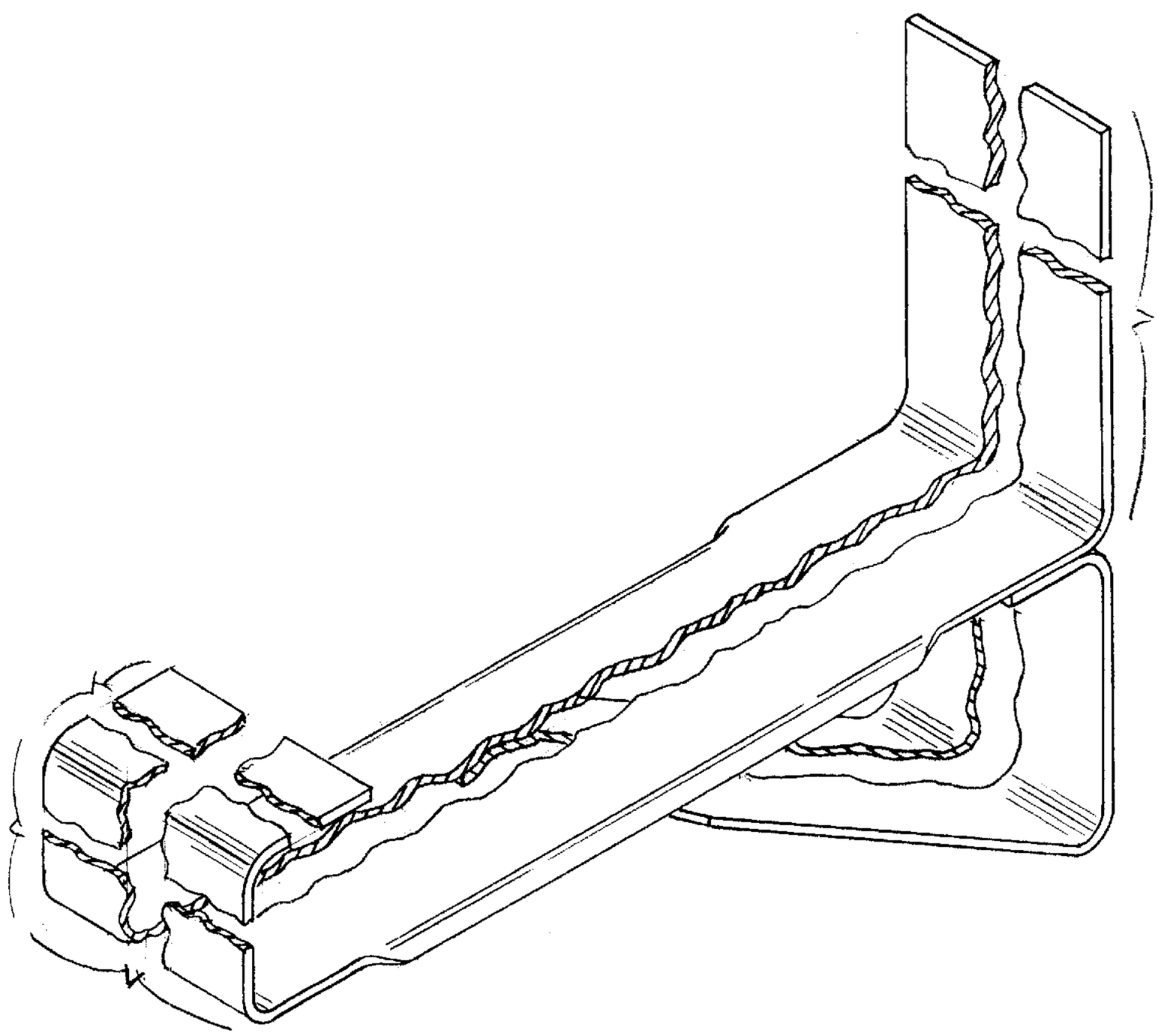

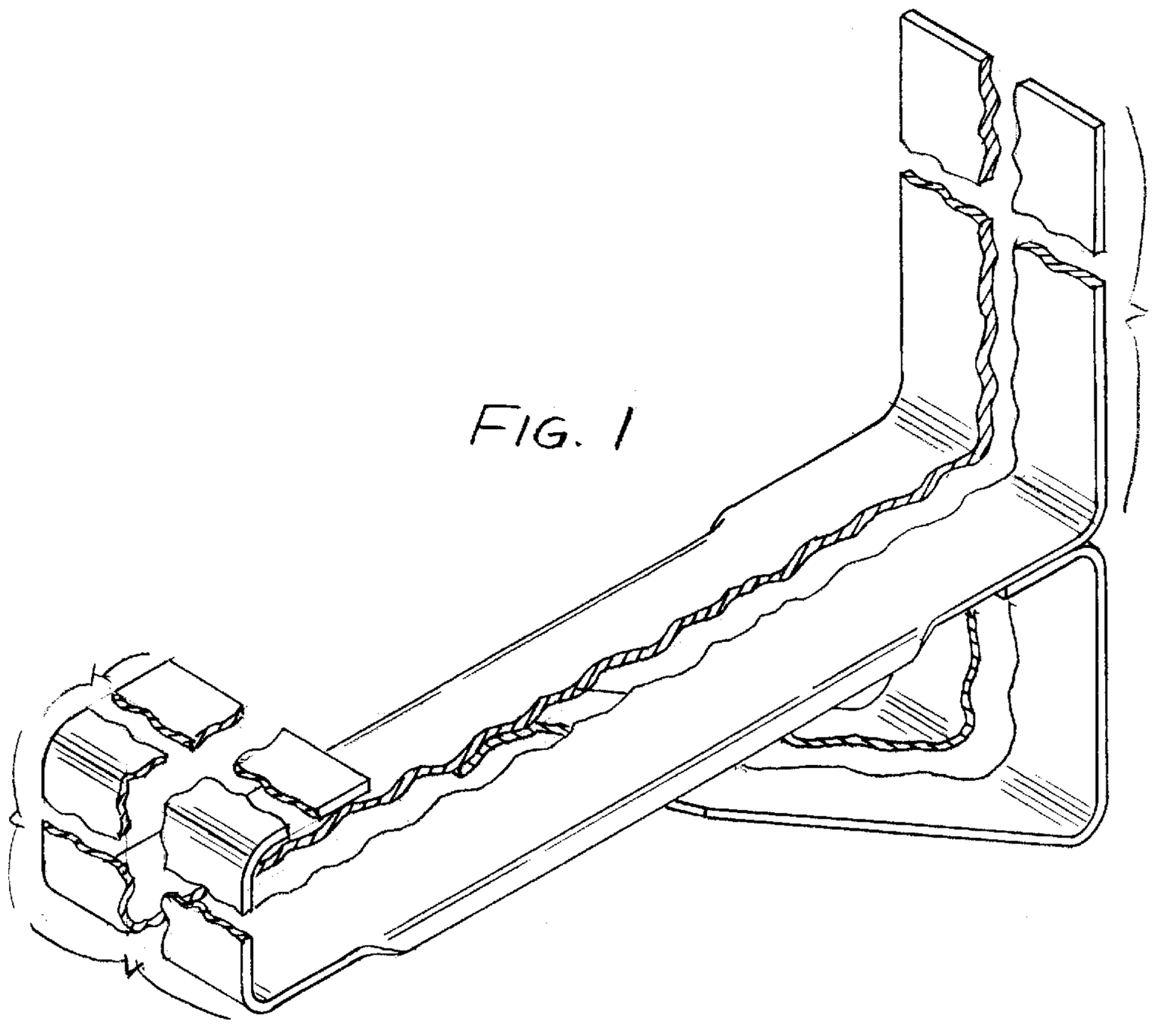

FIG. 1

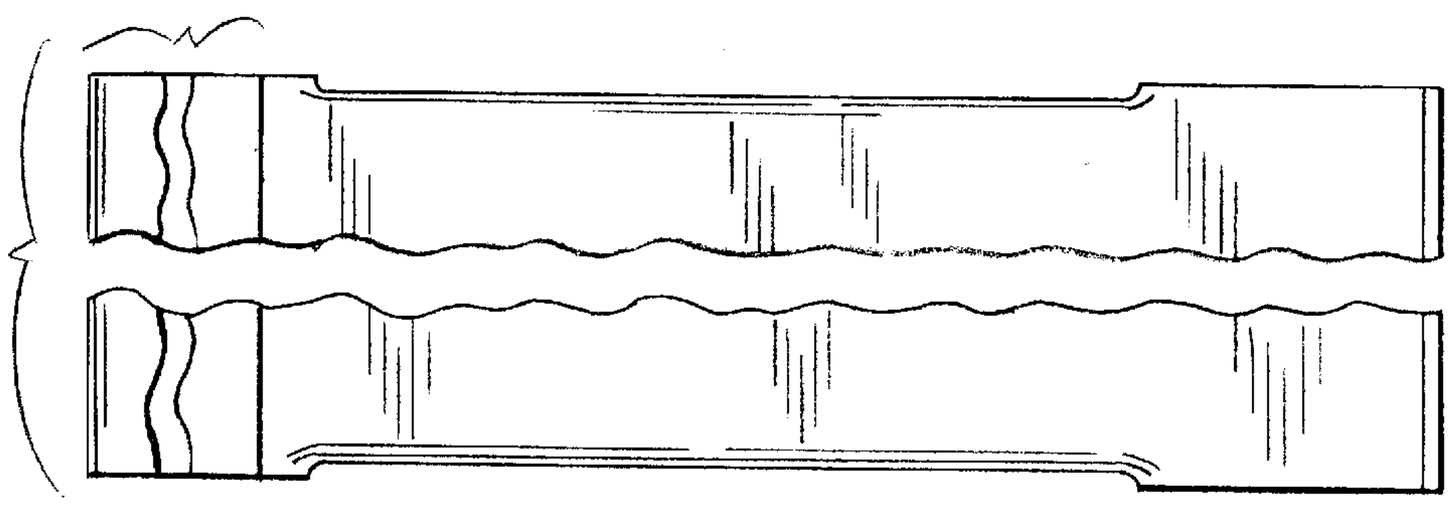

FIG. 2

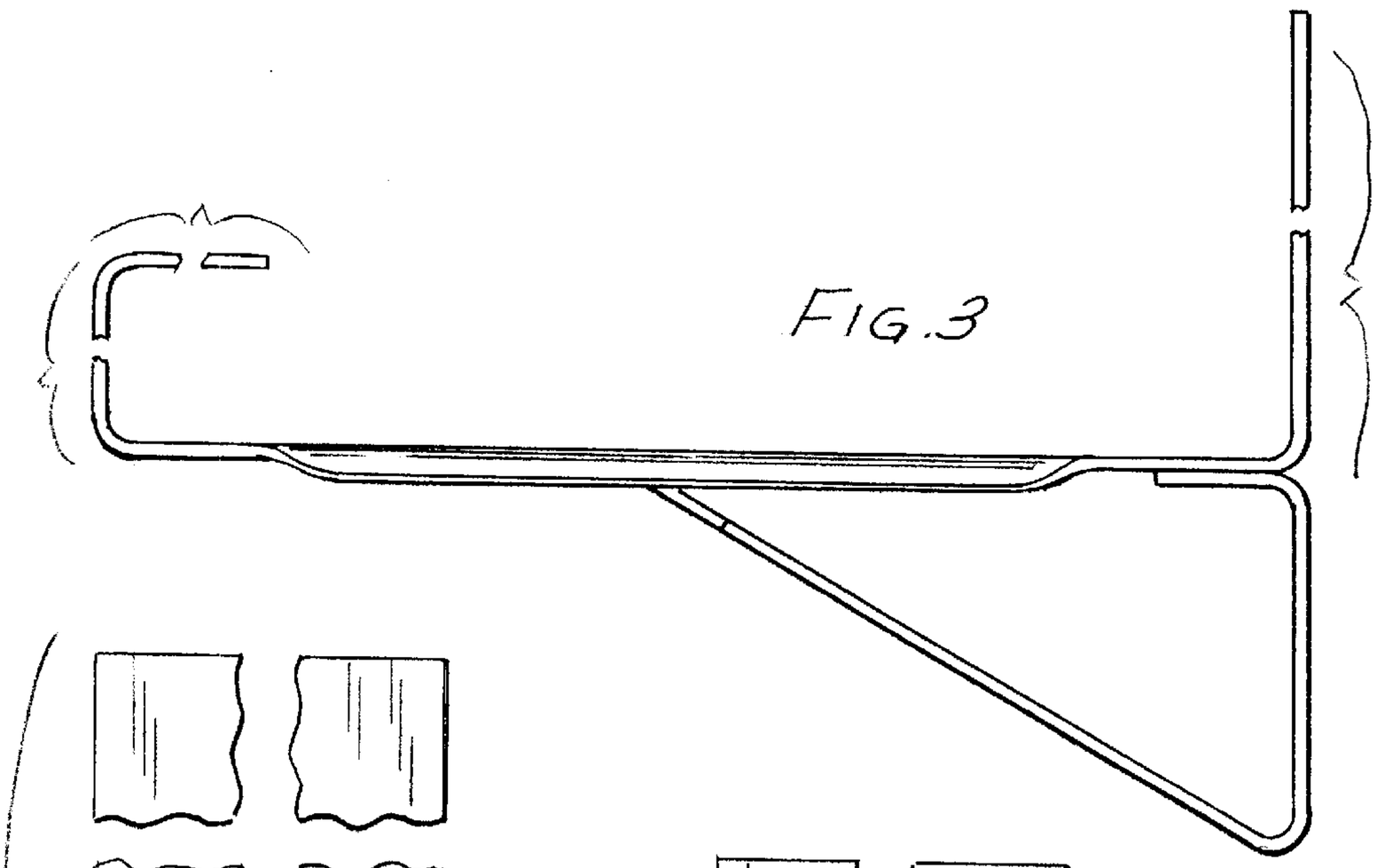

FIG. 3

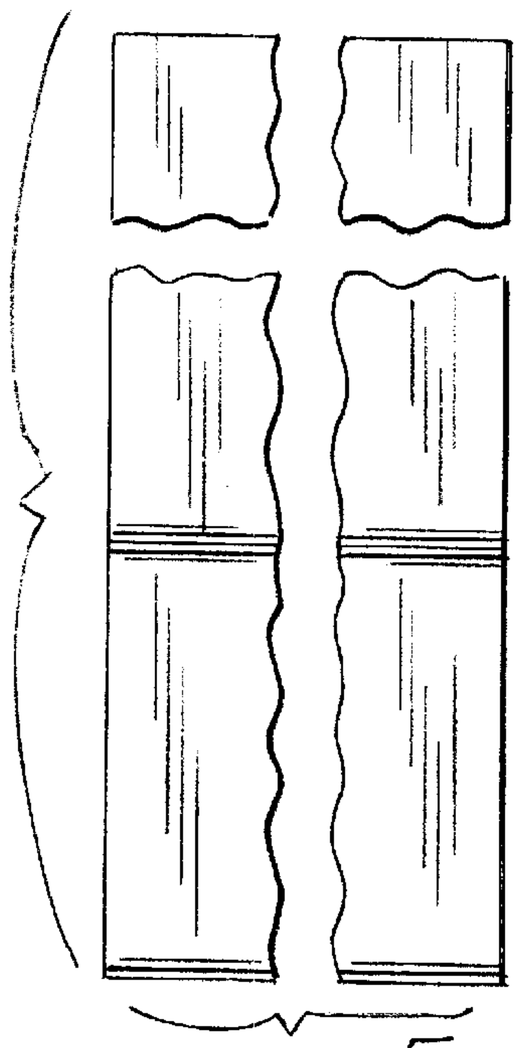

FIG. 4

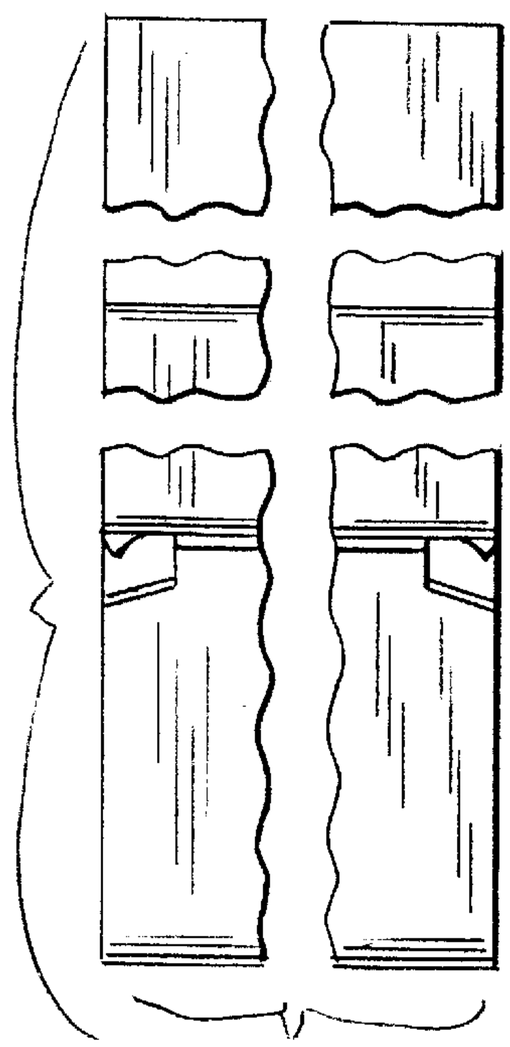

FIG. 5

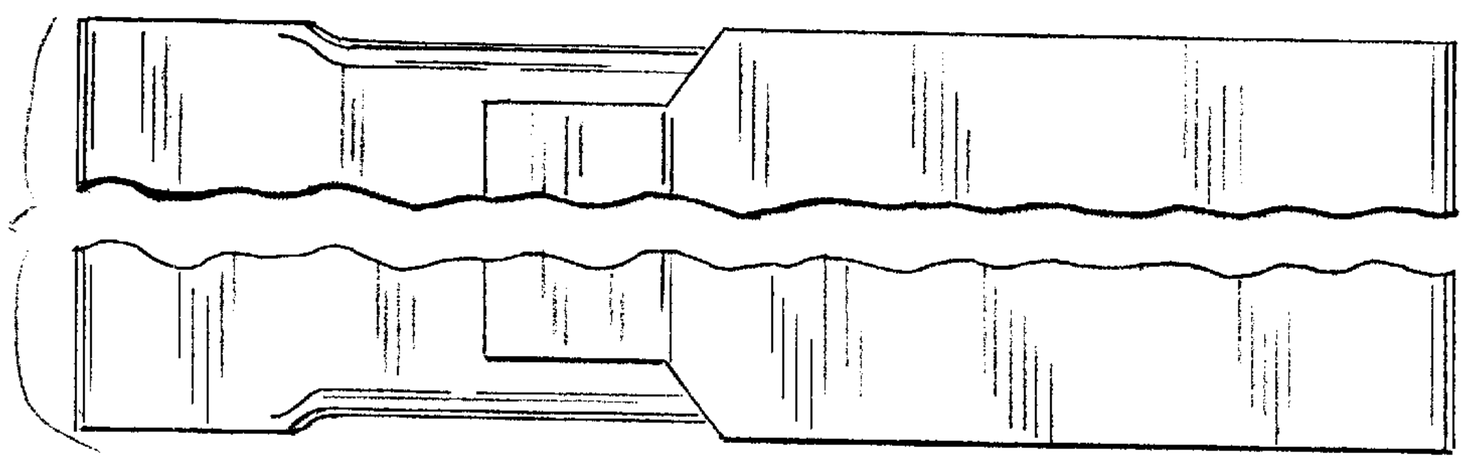

FIG. 6

UNITED STATES PATENT AND TRADEMARK OFFICE

CERTIFICATE OF CORRECTION

PATENT NO. : Des. 548,052 S
APPLICATION NO. : 29/232394
DATED : August 7, 2007
INVENTOR(S) : William D. Porter

It is certified that error appears in the above-identified patent and that said Letters Patent is hereby corrected as shown below:

The drawing sheets, consisting of Figs. 1-6, should be deleted to be replaced with the drawing sheets, consisting of Figs. 1-6, as shown on the attached pages.

Signed and Sealed this

Thirteenth Day of November, 2007

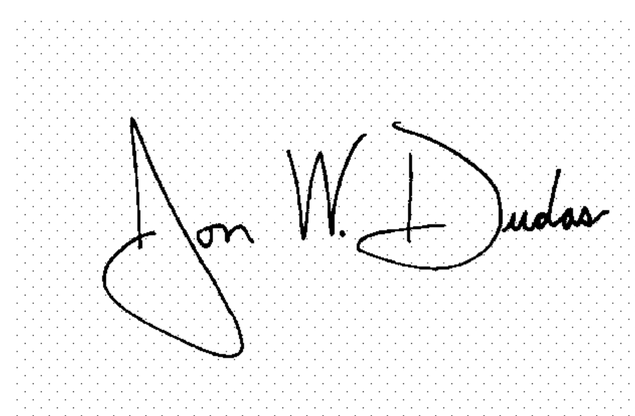

JON W. DUDAS
Director of the United States Patent and Trademark Office

(12) **United States Design Patent**
Porter

(10) **Patent No.: US D548,052 S**
(45) **Date of Patent: ** Aug. 7, 2007**

(54) **GUTTER STAY**

(76) Inventor: **William D. Porter**, 1868 Mill Hill Rd., St. Clair, MO (US) 63077

(**) Term: **14 Years**

(21) Appl. No.: **29/232,394**

(22) Filed: **Jun. 17, 2005**

(51) **LOC (8) Cl.** 08-05
(52) **U.S. Cl.** D8/354; D8/381
(58) **Field of Classification Search** D8/381, D8/354; 248/48.2, 235, 237, 245, 247; 52/15
See application file for complete search history.

(56) **References Cited**

U.S. PATENT DOCUMENTS

D369,293 S * 4/1996 Gusdorf et al. D8/381

OTHER PUBLICATIONS

AU 92961 S (Griffith Hack) Jul. 31, 1986 [online] [retrieved on May 11, 2006]. Retrieved from Australian patent database.*

* cited by examiner

Primary Examiner—Holly H. Baynham
(74) *Attorney, Agent, or Firm*- Grace J. Fishel

(57) **CLAIM**

The ornamental design for a gutter stay, as shown.

DESCRIPTION

FIG. 1 is a perspective view of a gutter stay;

FIG. 2 is a top plan view thereof;

FIG. 3 is a right side elevation view thereof, the left side being a mirror image of the right side;

FIG. 4 is a back elevation view thereof;

FIG. 5 is a front elevation view thereof; and,

FIG. 6 is a bottom plan view thereof.

The use of separations and brackets in the drawings indicate that, for ease of illustration, the precise length and width of the gutter stay is not claimed.

1 Claim, 2 Drawing Sheets

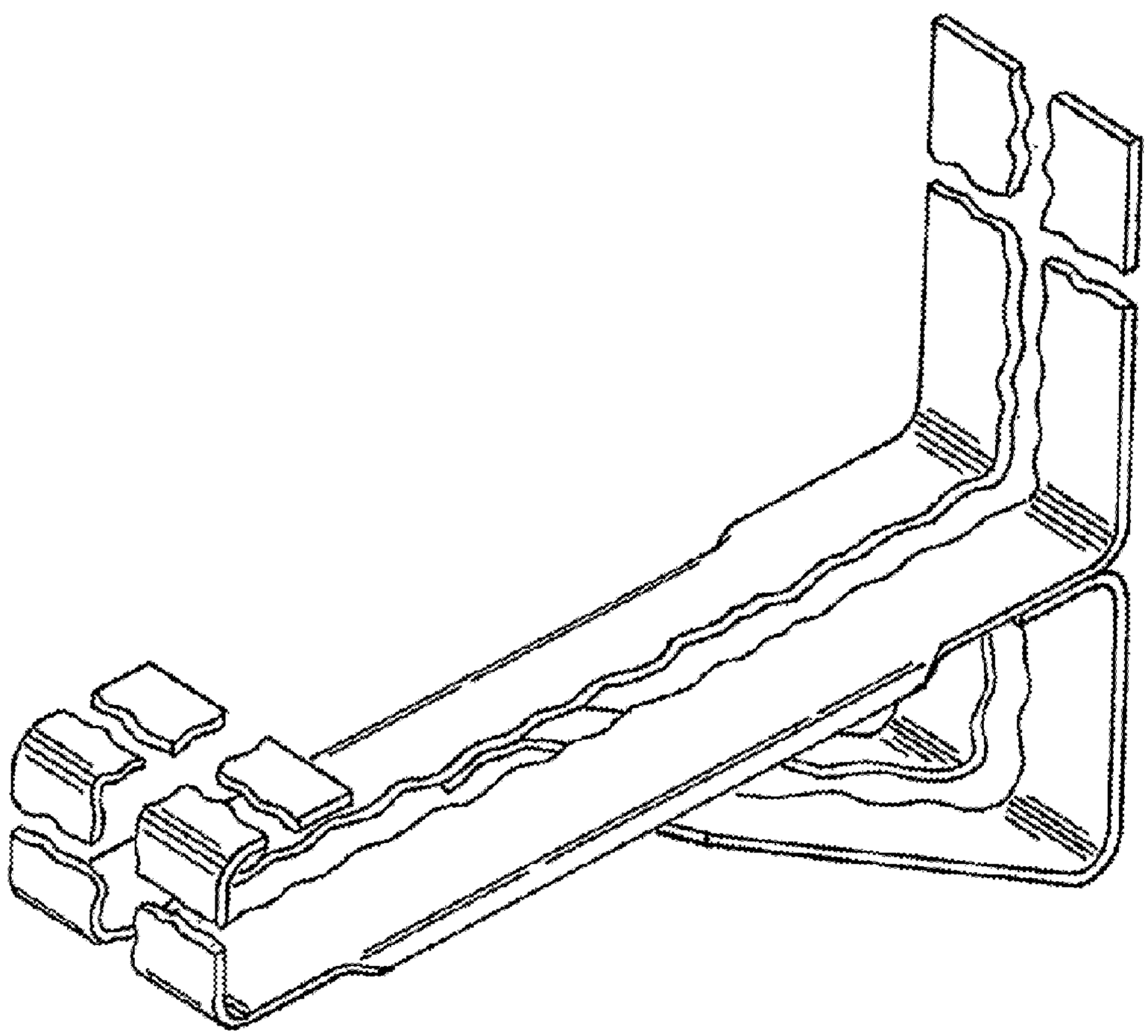

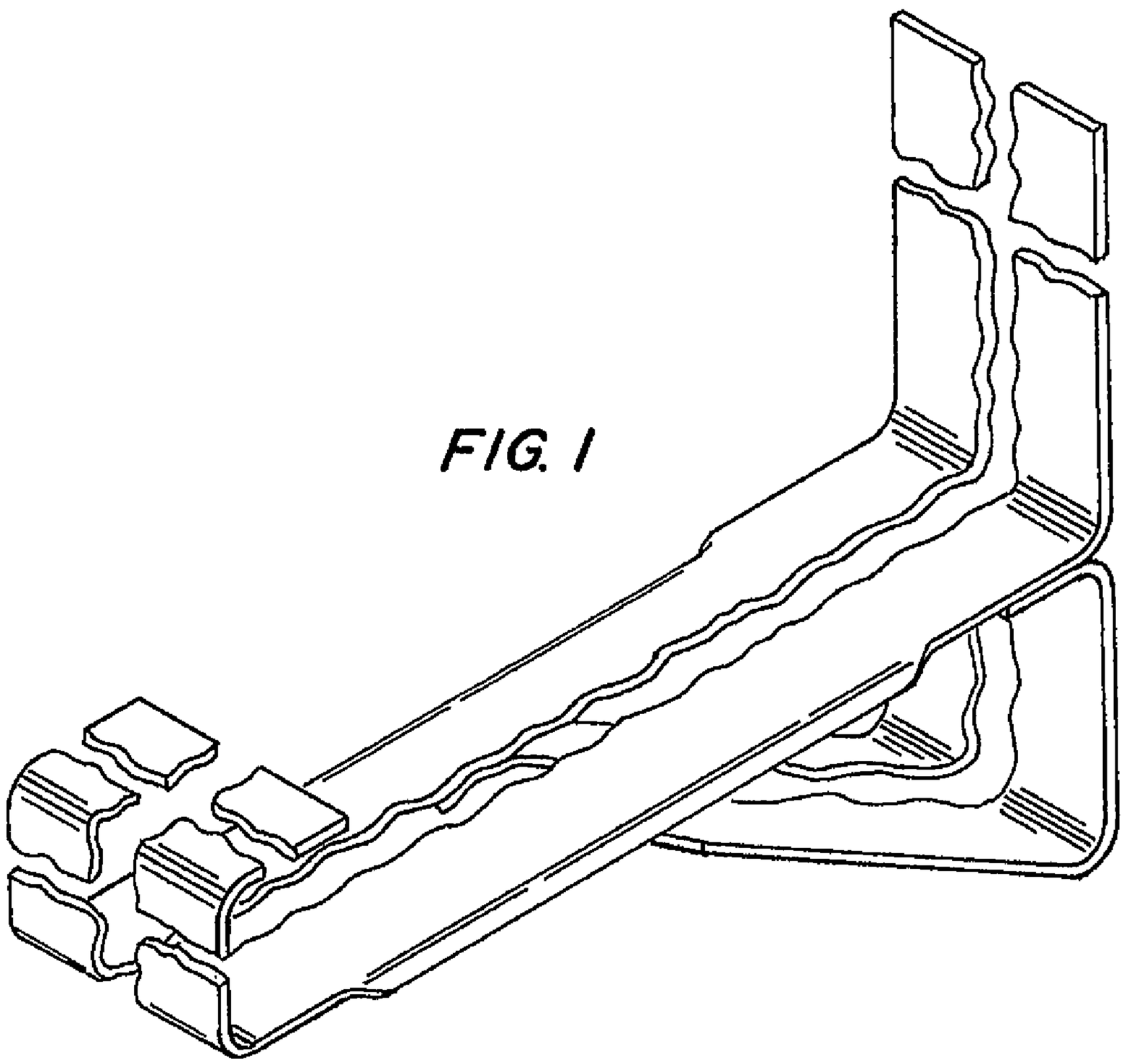

FIG. 1

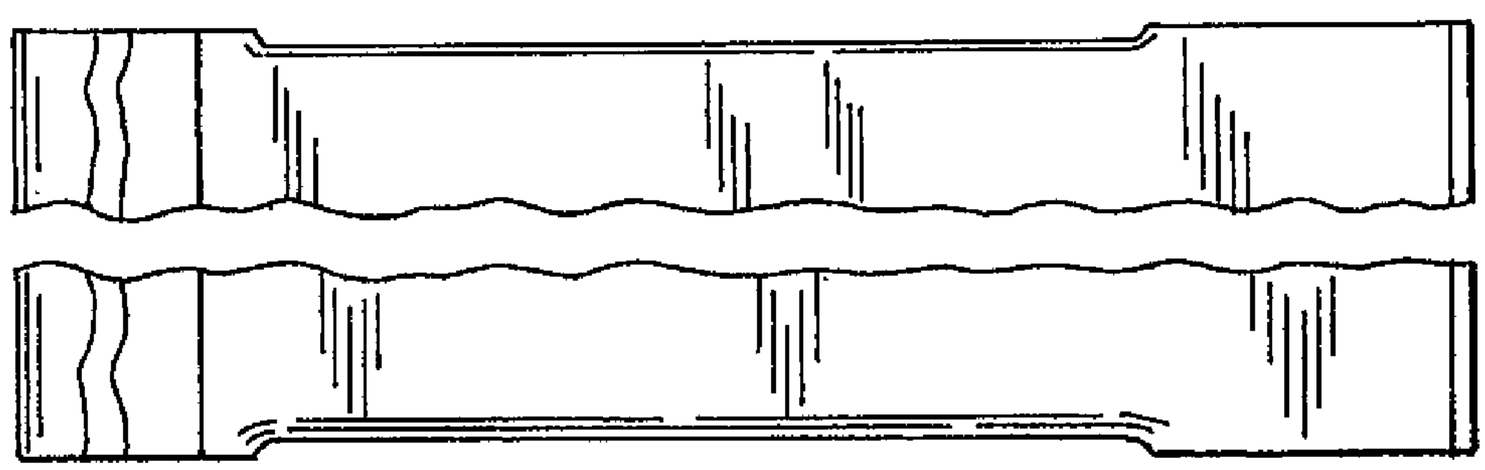

FIG. 2

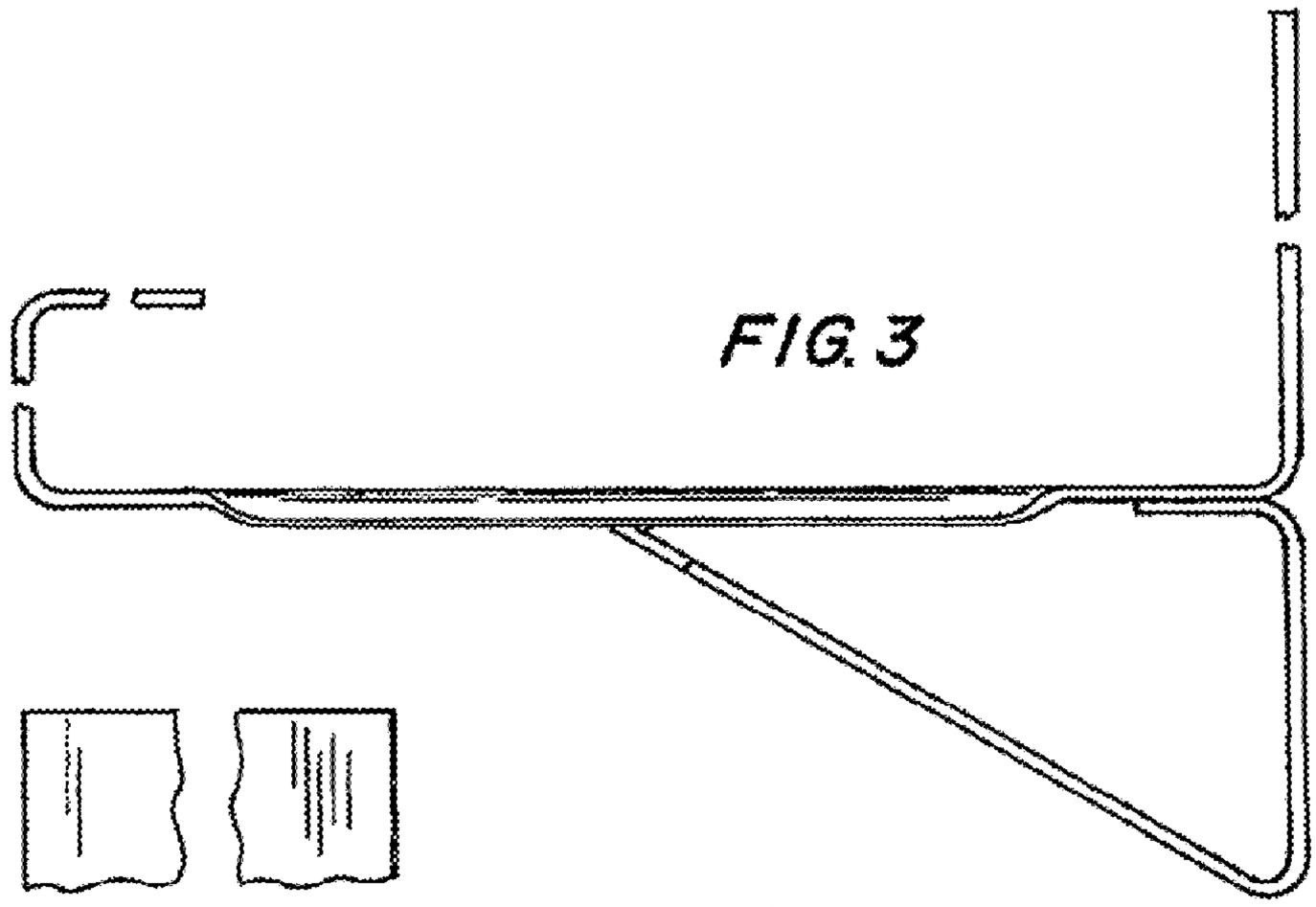

FIG. 3

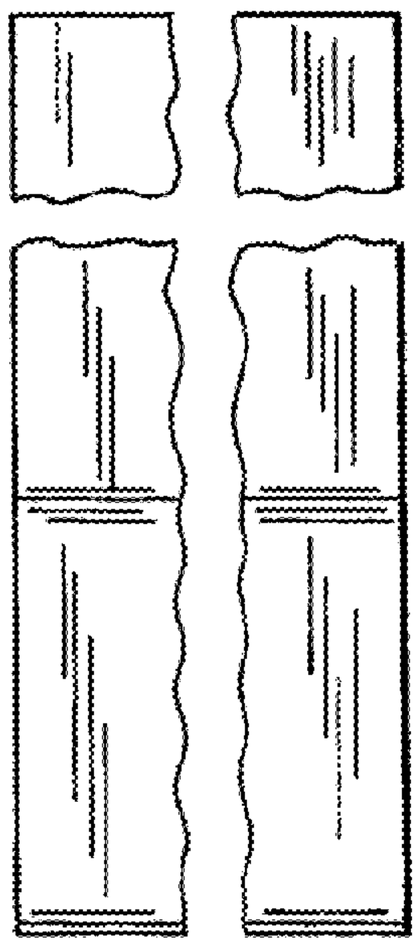

FIG. 4

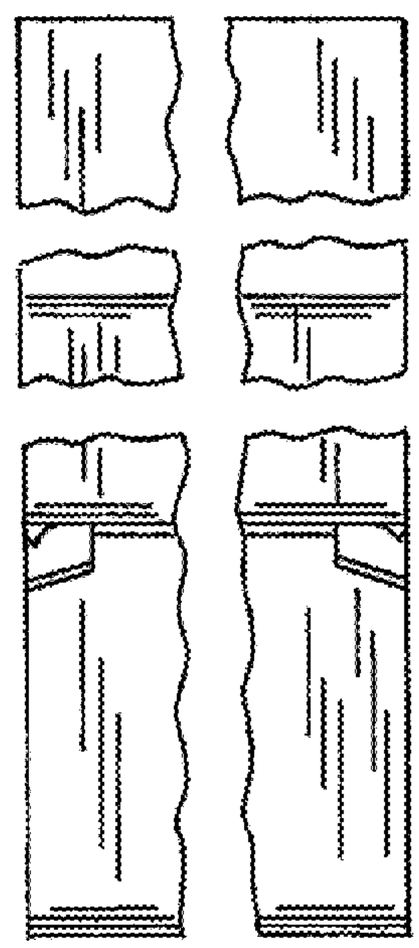

FIG. 5

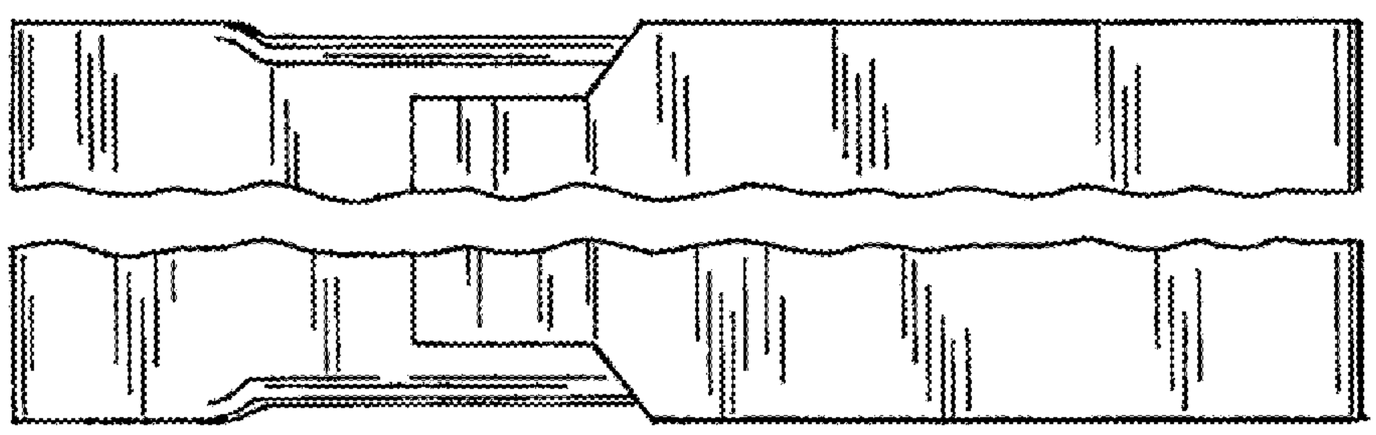

FIG. 6

UNITED STATES PATENT AND TRADEMARK OFFICE

CERTIFICATE OF CORRECTION

PATENT NO. : Des. 548,052 S
APPLICATION NO. : 29/232394
DATED : August 7, 2007
INVENTOR(S) : William D. Porter

It is certified that error appears in the above-identified patent and that said Letters Patent is hereby corrected as shown below:

The drawing sheets, consisting of Figs. 1-6, should be deleted to be replaced with the drawing sheets, consisting of Figs. 1-6, as shown on the attached pages.

Signed and Sealed this

Twenty-seventh Day of November, 2007

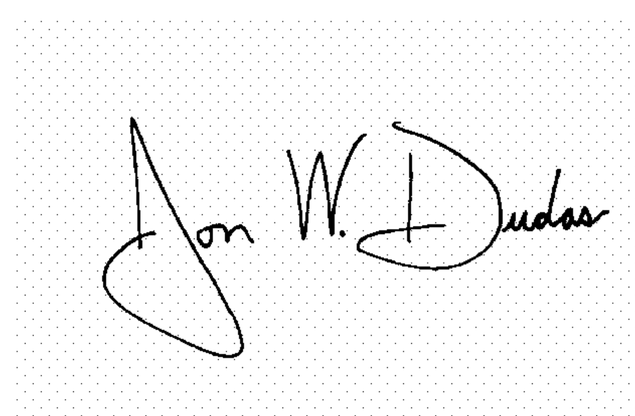

JON W. DUDAS
Director of the United States Patent and Trademark Office

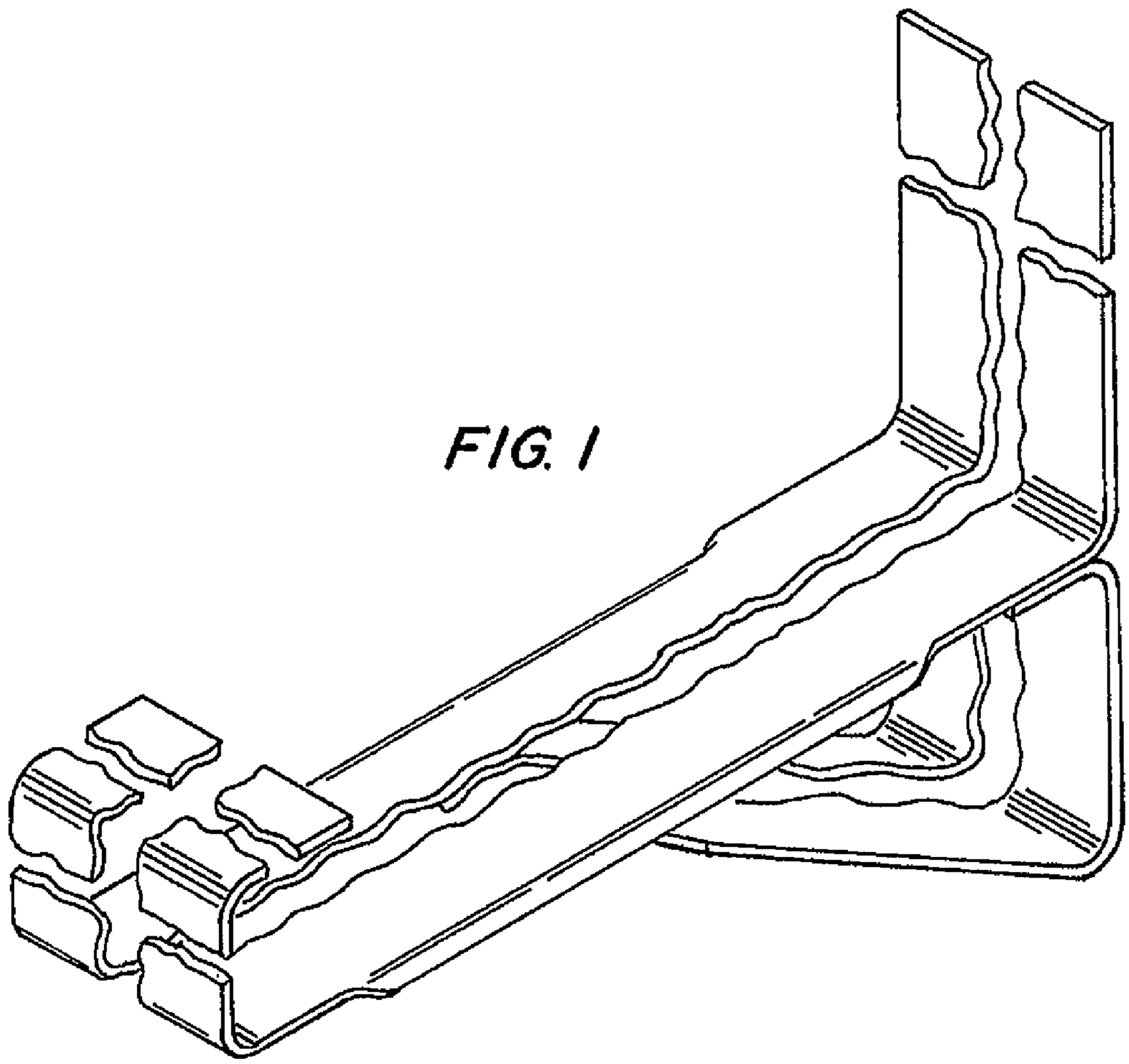

FIG. 1

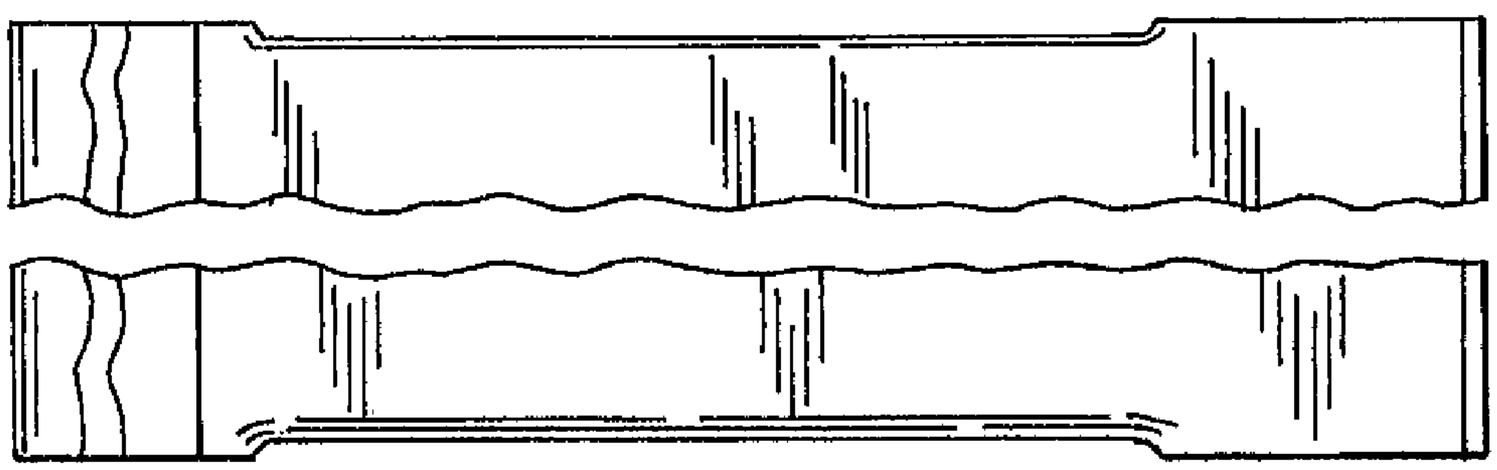

FIG. 2

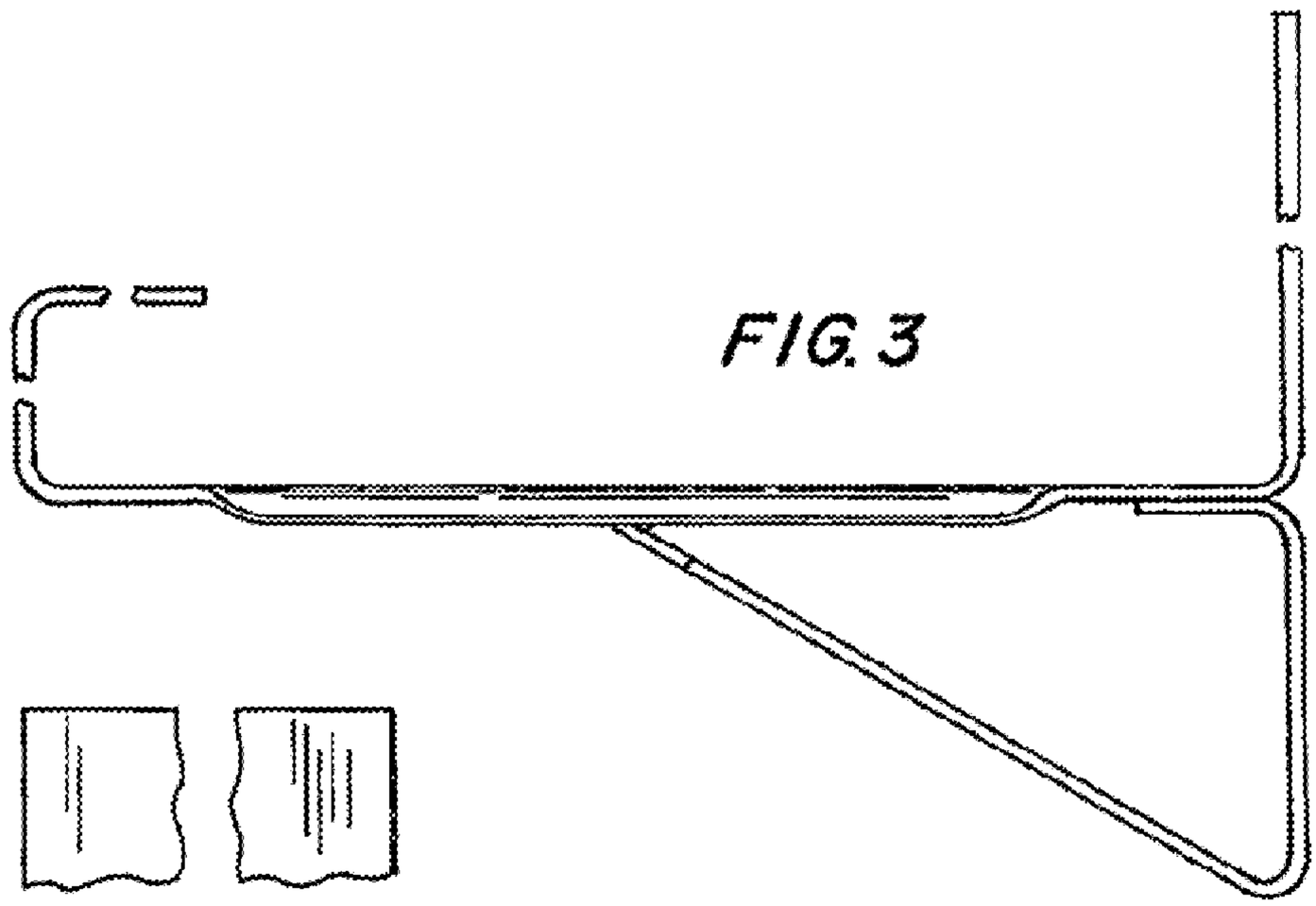

FIG. 3

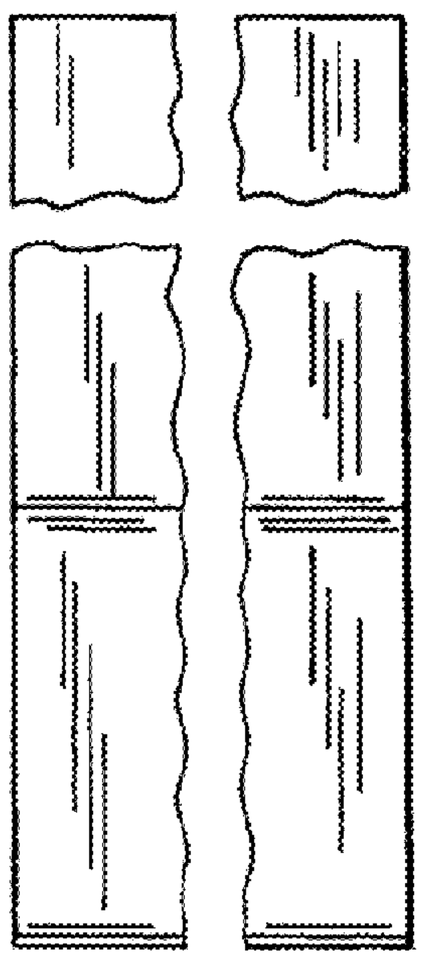

FIG. 4

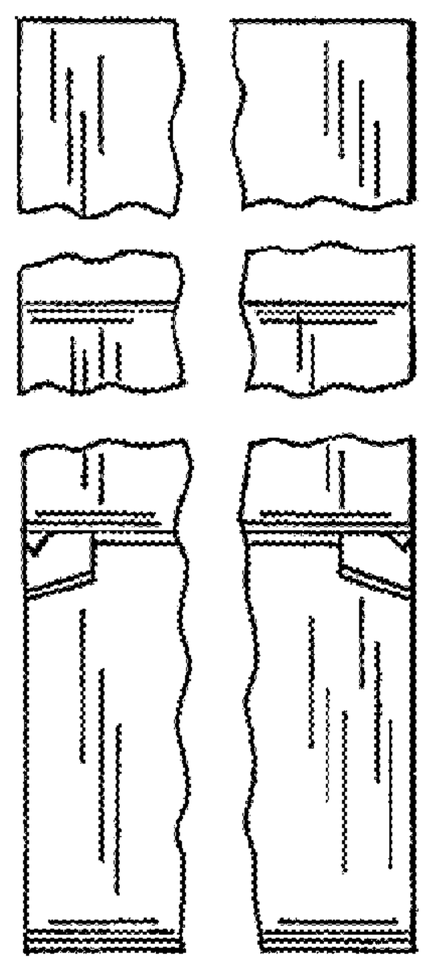

FIG. 5

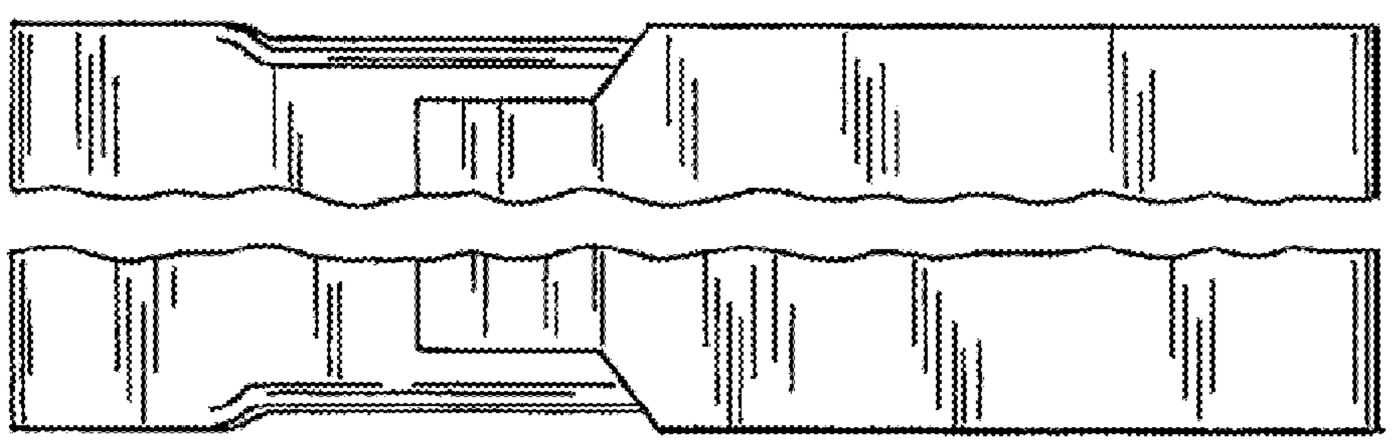

FIG. 6

UNITED STATES PATENT AND TRADEMARK OFFICE

CERTIFICATE OF CORRECTION

PATENT NO. : Des. 548,052 S
APPLICATION NO. : 29/232394
DATED : August 7, 2007
INVENTOR(S) : William D. Porter

It is certified that error appears in the above-identified patent and that said Letters Patent is hereby corrected as shown below:

Delete the title page and substitute therefor the attached title page.

The drawing sheets, consisting of Figs. 1-6, should be deleted to be replaced with the drawing sheets, consisting of Figs. 1-6, as shown on the attached pages.

This certificate supersedes the Certificate of Correction issued November 27, 2007.

Signed and Sealed this

Eighth Day of January, 2008

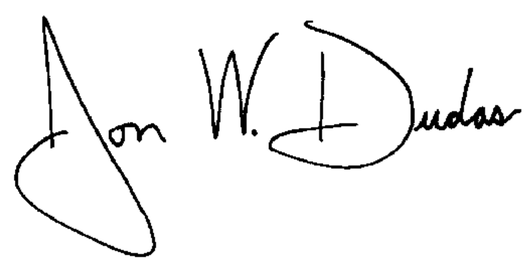

JON W. DUDAS
Director of the United States Patent and Trademark Office

(12) **United States Design Patent** (10) **Patent No.: US D548,052 S**
Porter (45) **Date of Patent: ** Aug. 7, 2007**

(54) **GUTTER STAY**

(76) Inventor: **William D. Porter**, 1868 Mill Hill Rd., St. Clair, MO (US) 63077

(**) Term: **14 Years**

(21) Appl. No.: **29/232,394**

(22) Filed: **Jun. 17, 2005**

(51) **LOC (8) Cl.** 08-05
(52) **U.S. Cl.** D8/354; D8/381
(58) **Field of Classification Search** D8/381, D8/354; 248/48.2, 235, 237, 245, 247; 52/15
See application file for complete search history.

(56) **References Cited**

U.S. PATENT DOCUMENTS

D369,293 S * 4/1996 Gusdorf et al. D8/381

OTHER PUBLICATIONS

AU 92961 S (Griffith Hack) Jul. 31, 1986 [online][retrieved on May 11, 2006]. Retrieved from Australian patent database.*

* cited by examiner

Primary Examiner—Holly H. Bayoham
(74) *Attorney, Agent, or Firm*—Grace J. Fishel

(57) **CLAIM**

The ornamental design for a gutter stay, as shown.

DESCRIPTION

FIG. 1 is a perspective view of a gutter stay;

FIG. 2 is a top plan view thereof;

FIG. 3 is a right side elevation view thereof, the left side being a mirror image of the right side;

FIG. 4 is a back elevation view thereof;

FIG. 5 is a front elevation view thereof; and,

FIG. 6 is a bottom plan view thereof.

The use of separations and brackets in the drawings indicate that, for ease of illustration, the precise length and width of the gutter stay is not claimed.

1 Claim, 2 Drawing Sheets

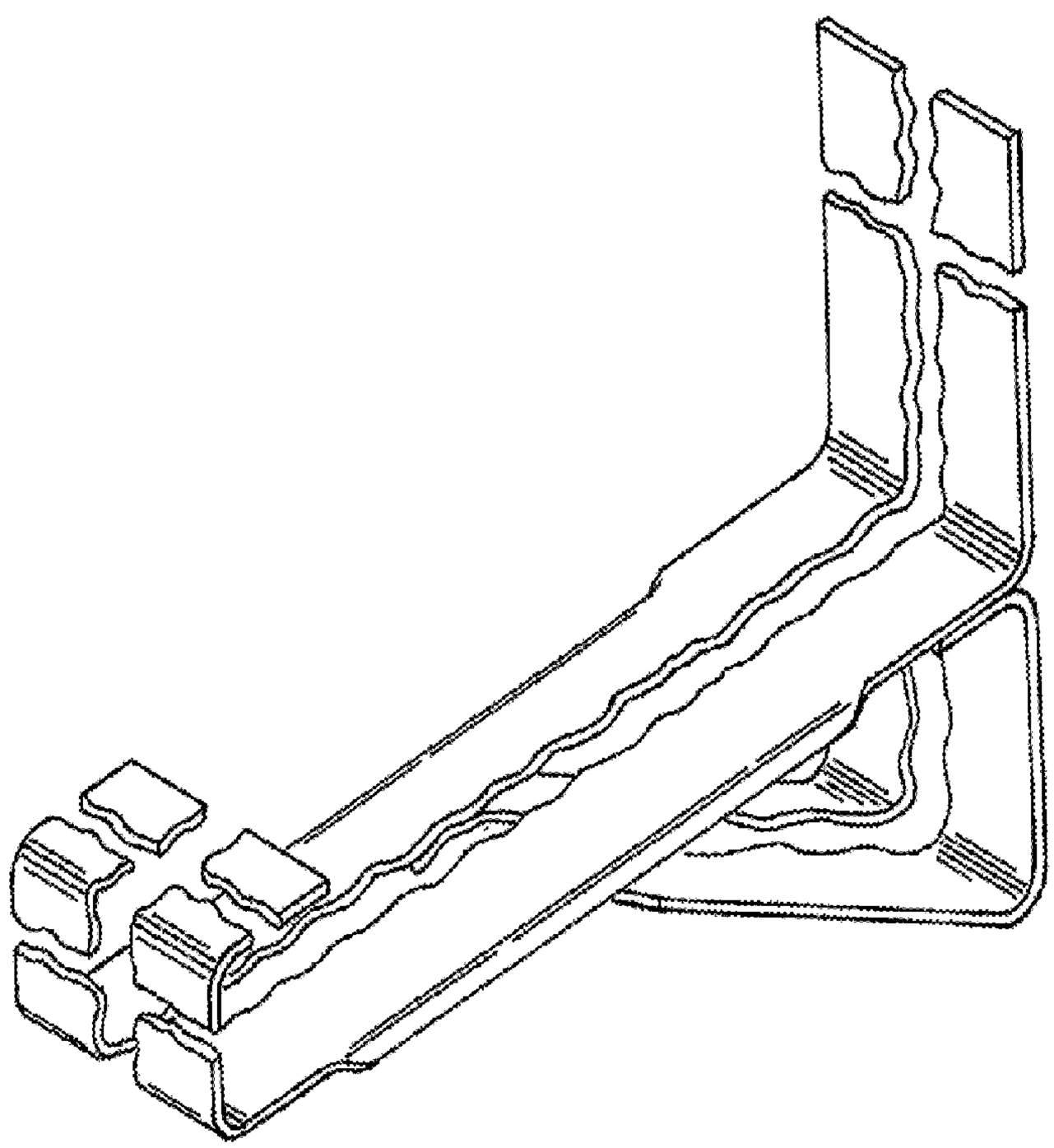

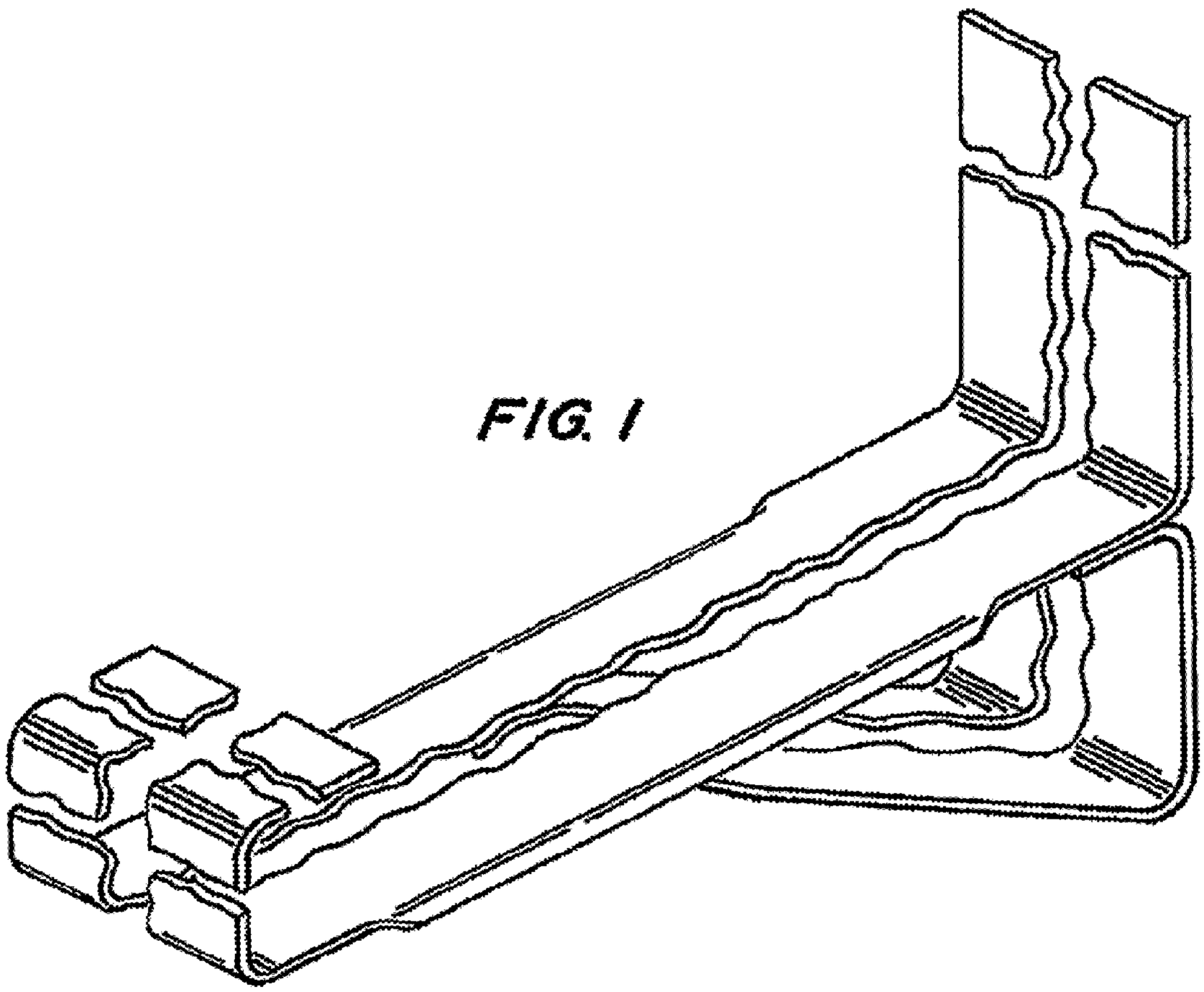

FIG. 1

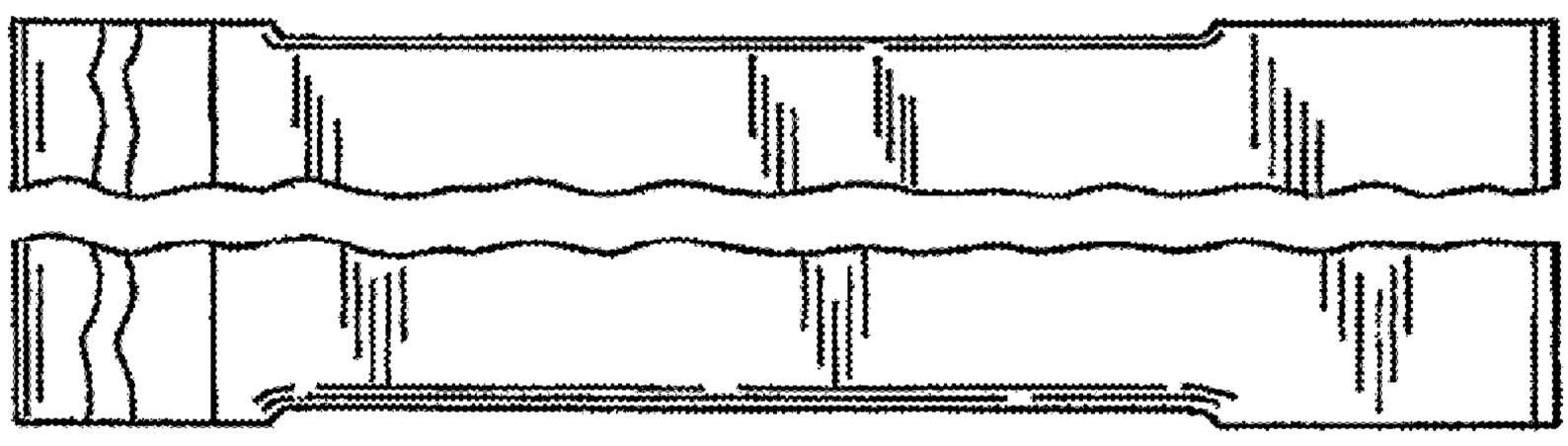

FIG. 2

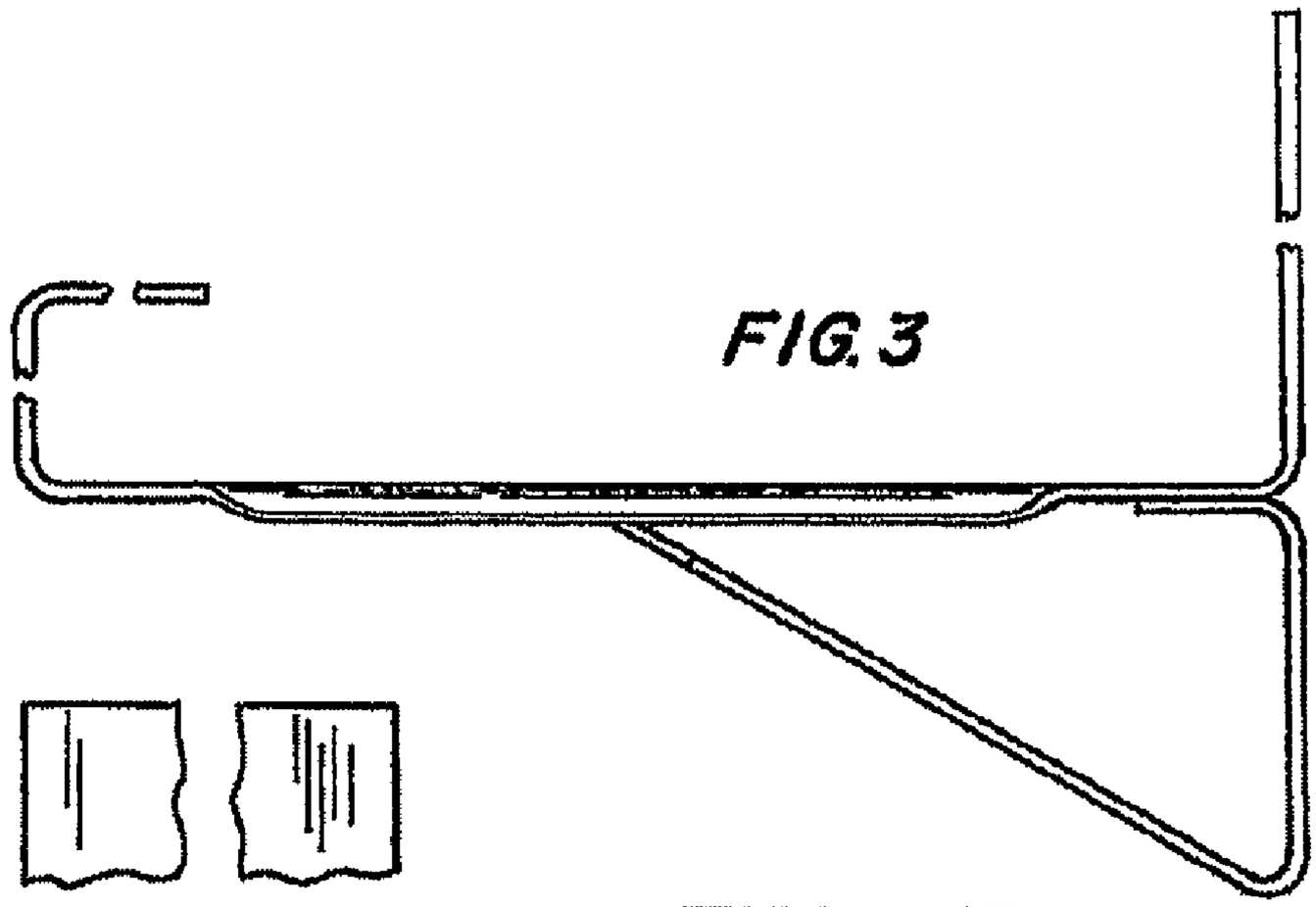

FIG. 3

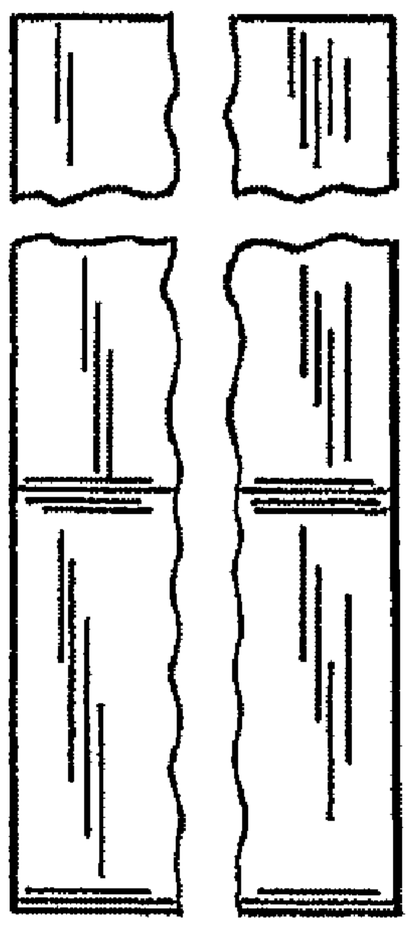

FIG. 4

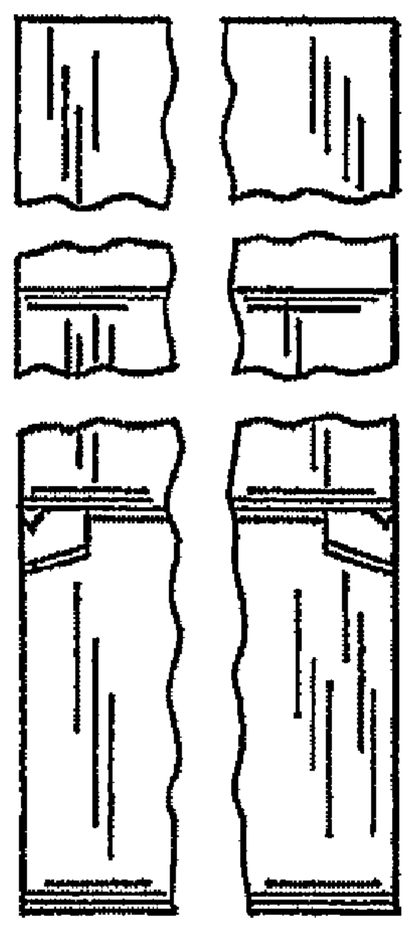

FIG. 5

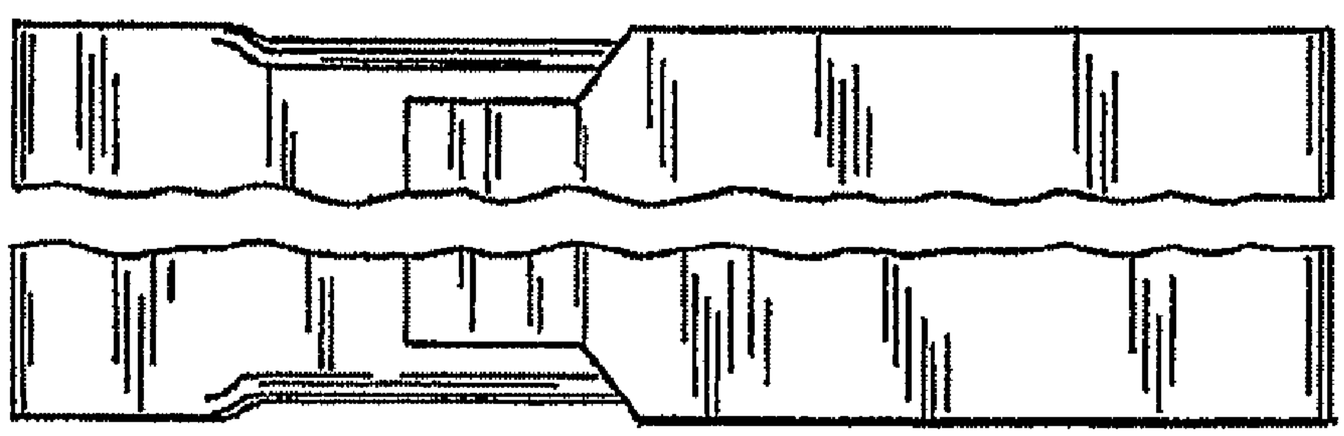

FIG. 6