US00D547523S

(12) United States Design Patent

Swinderman

(10) Patent No.: US D547,523 S
(45) Date of Patent: ** Jul. 24, 2007

(54) **ARM FOR A CONVEYOR BELT CLEANER**

(75) Inventor: **R. Todd Swinderman**, Kewanee, IL (US)

(73) Assignee: **Martin Engineering Company**, Neponset, IL (US)

(**) Term: **14 Years**

(21) Appl. No.: **29/247,868**

(22) Filed: **Jul. 18, 2006**

(51) **LOC (8) Cl.** **12-05**
(52) **U.S. Cl.** **D34/29**
(58) **Field of Classification Search** D34/29, D34/35; 198/497, 499
See application file for complete search history.

(56) **References Cited**

U.S. PATENT DOCUMENTS

3,342,312	A	9/1967	Reiter	
3,504,786	A	4/1970	Matson	
3,841,470	A	10/1974	Meguro	
3,994,388	A	11/1976	Keiter	
4,098,394	A	7/1978	Stahura	
4,249,650	A	2/1981	Stahura	
4,359,150	A *	11/1982	Bowman et al.	198/497
4,529,084	A	7/1985	Zhang	
4,533,036	A	8/1985	Gordon	
4,598,823	A	7/1986	Swinderman	
4,633,999	A *	1/1987	Perneczky	198/499
4,643,293	A	2/1987	Swinderman	
4,779,716	A	10/1988	Gordon	
4,787,500	A	11/1988	Holz	
4,854,443	A	8/1989	Gordon	
4,917,231	A	4/1990	Swinderman	
5,114,000	A *	5/1992	Rappen	198/499
5,310,042	A	5/1994	Veenhof	
D347,918	S	6/1994	Gibbs	
5,413,208	A	5/1995	Veenhof	
5,518,107	A *	5/1996	Schwarze	198/499
5,797,477	A	8/1998	Veenhof	
5,944,167	A	8/1999	Brink	
5,950,803	A *	9/1999	Schwarze	198/499
6,321,901	B1	11/2001	Strebel et al.	
6,374,990	B1	4/2002	Swinderman	
6,374,991	B1	4/2002	Swinderman	
6,401,911	B1	6/2002	Swinderman	
6,439,373	B1	8/2002	Swinderman	
6,581,754	B2	6/2003	Law	
6,591,969	B2	7/2003	Swinderman et al.	
6,986,418	B2	1/2006	Swinderman et al.	
7,014,035	B2 *	3/2006	Wiggins	198/497
2004/0188224	A1 *	9/2004	Kolodziej et al.	198/499

* cited by examiner

Primary Examiner—Cynthia E. Ramirez
(74) *Attorney, Agent, or Firm*—Barnes & Thornburg LLP

(57) **CLAIM**

The ornamental design for an arm for a conveyor belt cleaner, as shown and described.

DESCRIPTION

FIG. **1** is an isometric view of an arm for a conveyor belt cleaner;

FIG. **2** is a top plan view of the arm;

FIG. **3** is a left side elevational view of the arm, the right side elevational view being a mirror image;

FIG. **4** is a rear elevational view of the arm;

FIG. **5** is a front elevational view of the arm; and,

FIG. **6** is a bottom view of the arm.

The broken line showing in the figures is included for illustrative purpose only and forms no part of the claimed design.

1 Claim, 4 Drawing Sheets

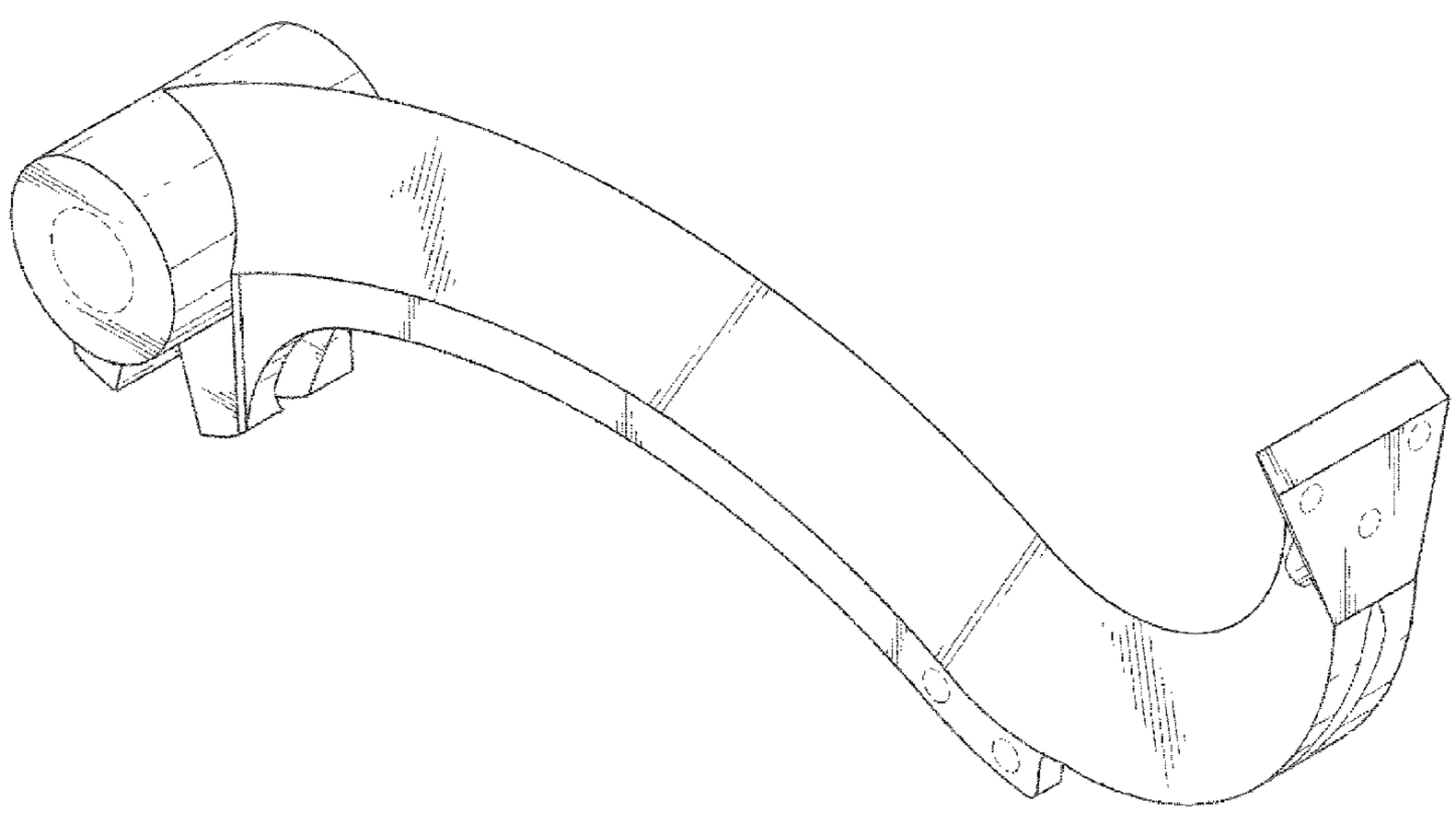

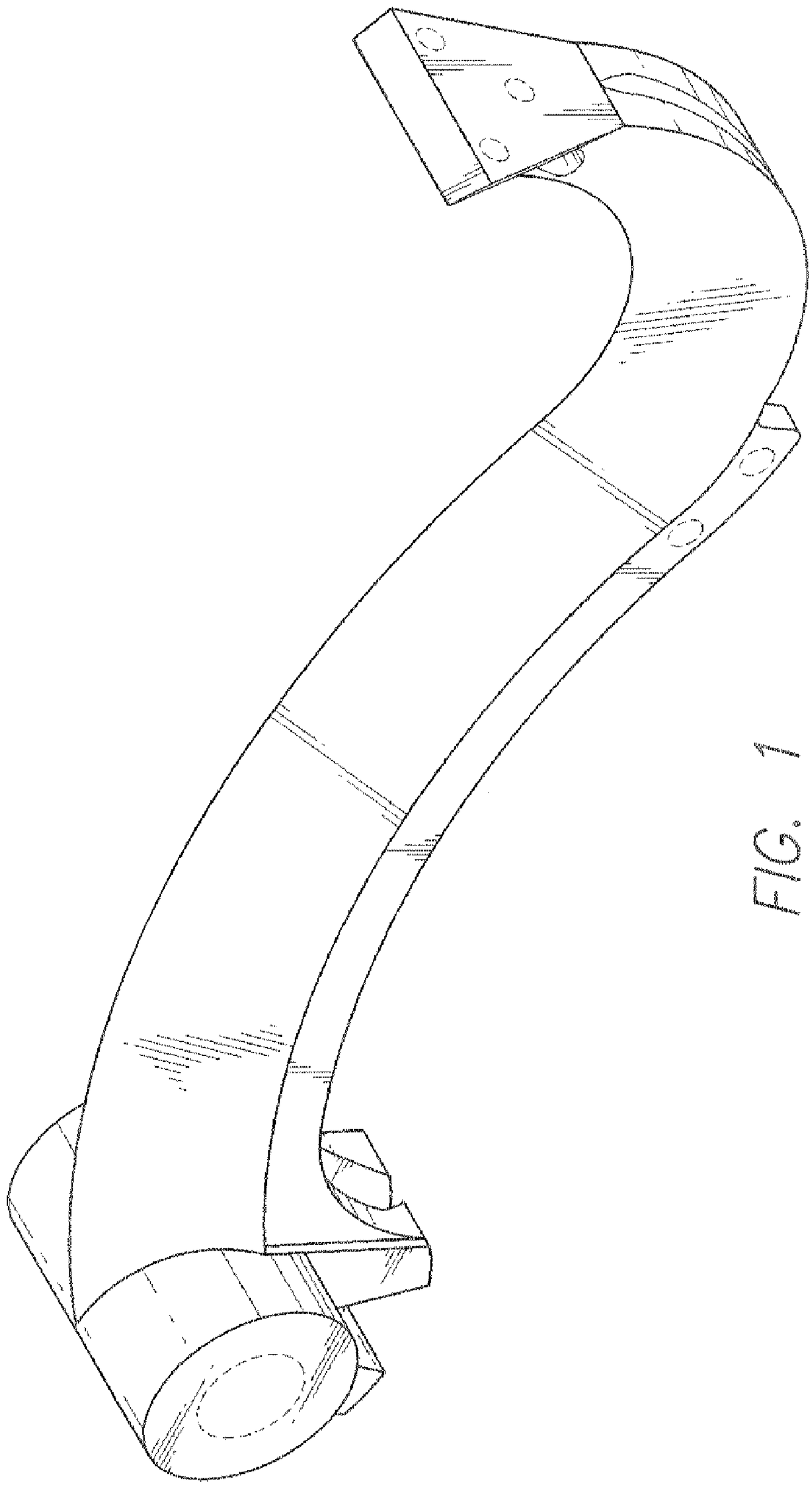

FIG. 1

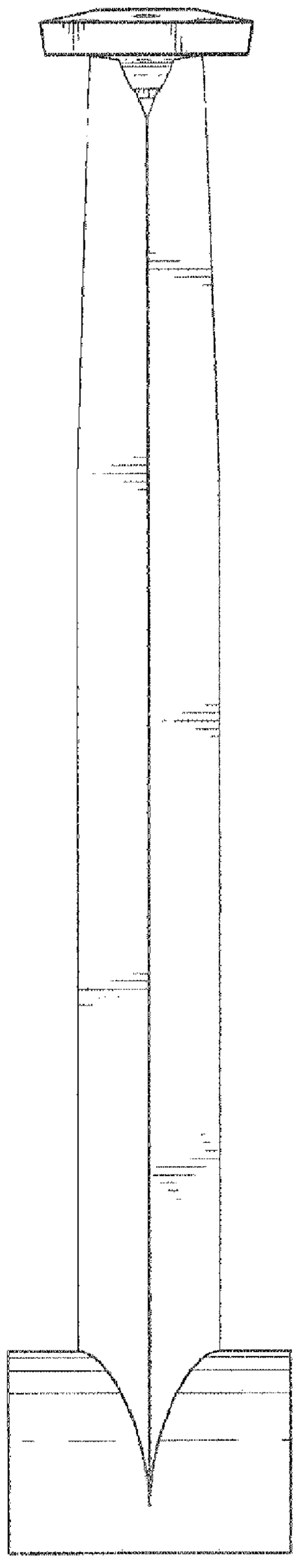

FIG. 2

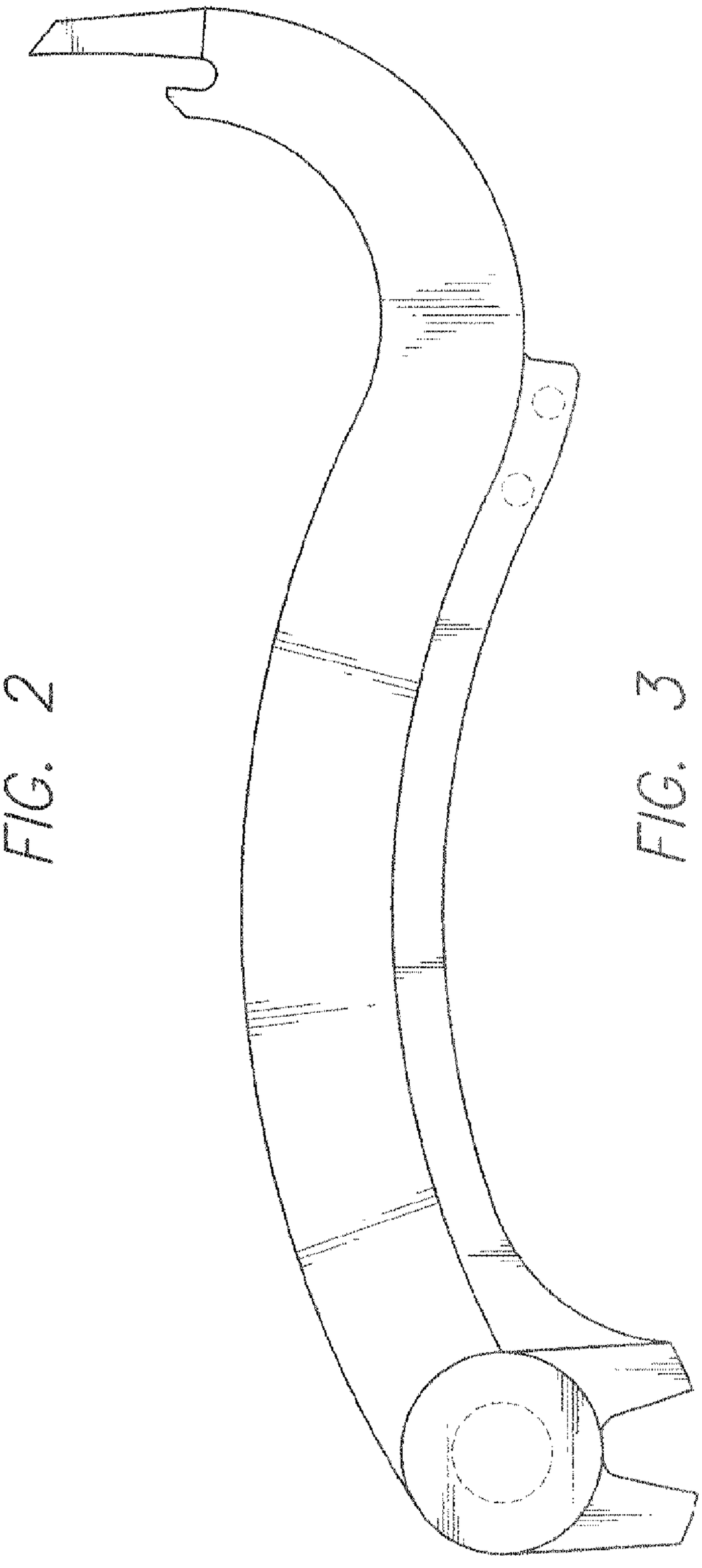

FIG. 3

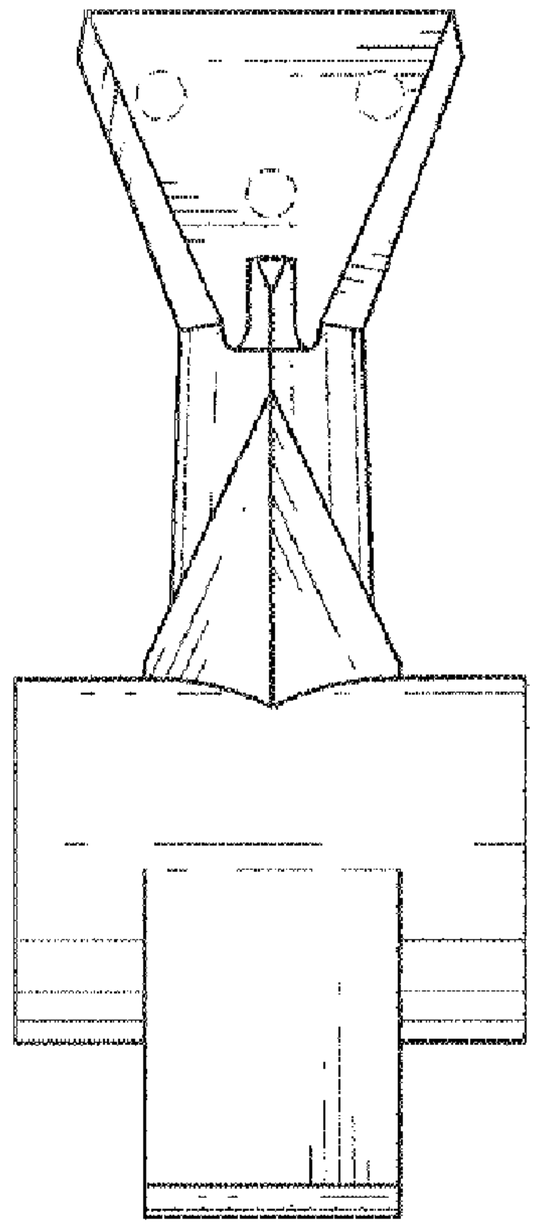

FIG. 4

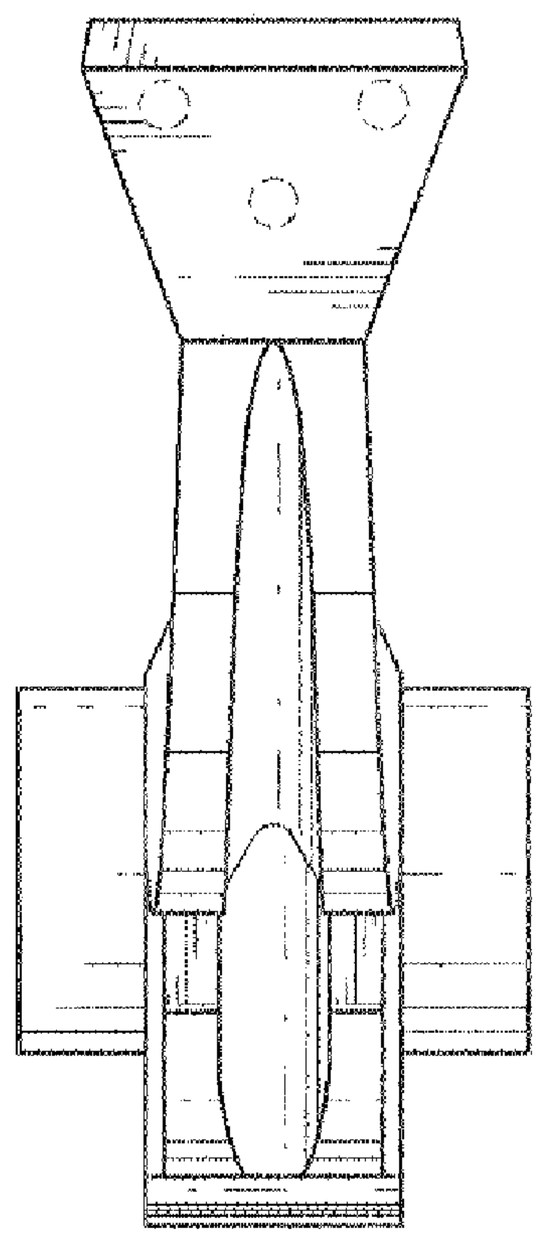

FIG. 5

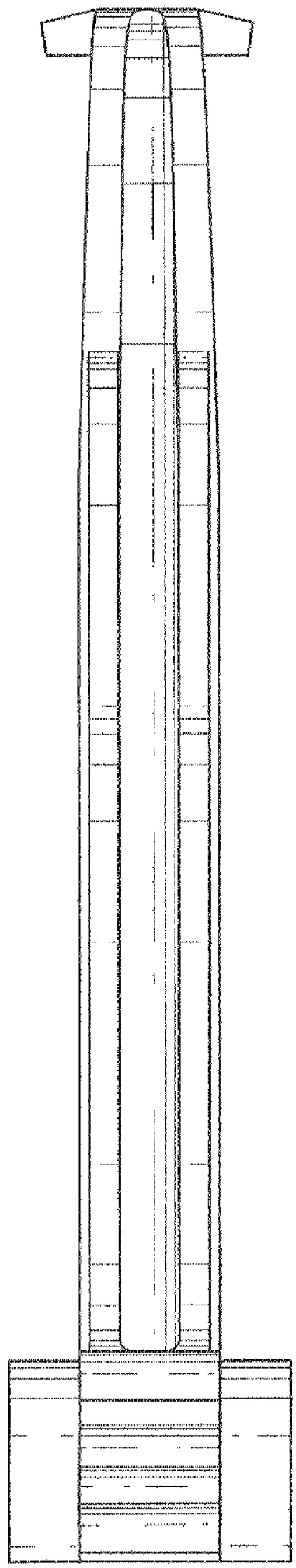

FIG. 6