US00D547069S

(12) United States Design Patent

Braithwaite et al.

(10) Patent No.: US D547,069 S
(45) Date of Patent: ** Jul. 24, 2007

(54) **POLISHER DEVICE**

(75) Inventors: **Jean Braithwaite**, Hull (GB); **Olly Brown**, Hull (GB); **Philippe Poirier**, Hull (GB)

(73) Assignee: **Reckitt Benckiser (UK) Limited**, Slough, Berkshire (GB)

(**) Term: **14 Years**

(21) Appl. No.: **29/243,951**

(22) Filed: **Dec. 2, 2005**

(30) **Foreign Application Priority Data**

Jun. 6, 2005 (EM) 000354451

(51) **LOC (8) Cl.** **04-01**
(52) **U.S. Cl.** **D4/137**; D32/15; D32/50
(58) **Field of Classification Search** D32/15–16, D32/19, 40, 50; D4/102, 116, 137; 15/320–321, 15/22.1, 28–29, 49.1, 50.1; 401/137–139, 401/289
See application file for complete search history.

(56) **References Cited**

U.S. PATENT DOCUMENTS

2,290,375 A * 7/1942 Macias 222/191
2,480,023 A * 8/1949 Holden 401/28
D193,171 S * 7/1962 Hulsh D4/114
D197,640 S * 3/1964 Doster D32/41
D222,026 S * 9/1971 Johnson D4/137
D392,432 S * 3/1998 Henrie D32/40
6,004,194 A * 12/1999 Hild et al. 451/357
D470,278 S * 2/2003 Liang-Ming D32/15
6,655,866 B1 * 12/2003 Morad et al. 401/139

* cited by examiner

Primary Examiner—Pamela J. Burgess
(74) *Attorney, Agent, or Firm*—Norris McLaughlin & Marcus, PA

(57) **CLAIM**

The ornamental design for a polisher device, as shown and described.

DESCRIPTION

FIG. **1** is a top perspective view of a polisher device showing our new design with the handle removed for clarity of disclosure;

FIG. **2** is a bottom perspective view thereof;

FIG. **3** is a top plan view thereof;

FIG. **4** is a side elevational view thereof, as seen from the left side of FIG. **3**;

FIG. **5** is a side elevational view thereof, as seen from the bottom side of FIG. **3**;

FIG. **6** is a side elevational view thereof, as seen from the top side of FIG. **3**;

FIG. **7** is a top perspective view of a second embodiment of a polisher device showing our new design;

FIG. **8** is a bottom perspective view thereof;

FIG. **9** is a top plan view thereof; and,

FIG. **10** is a side elevational view thereof.

1 Claim, 5 Drawing Sheets

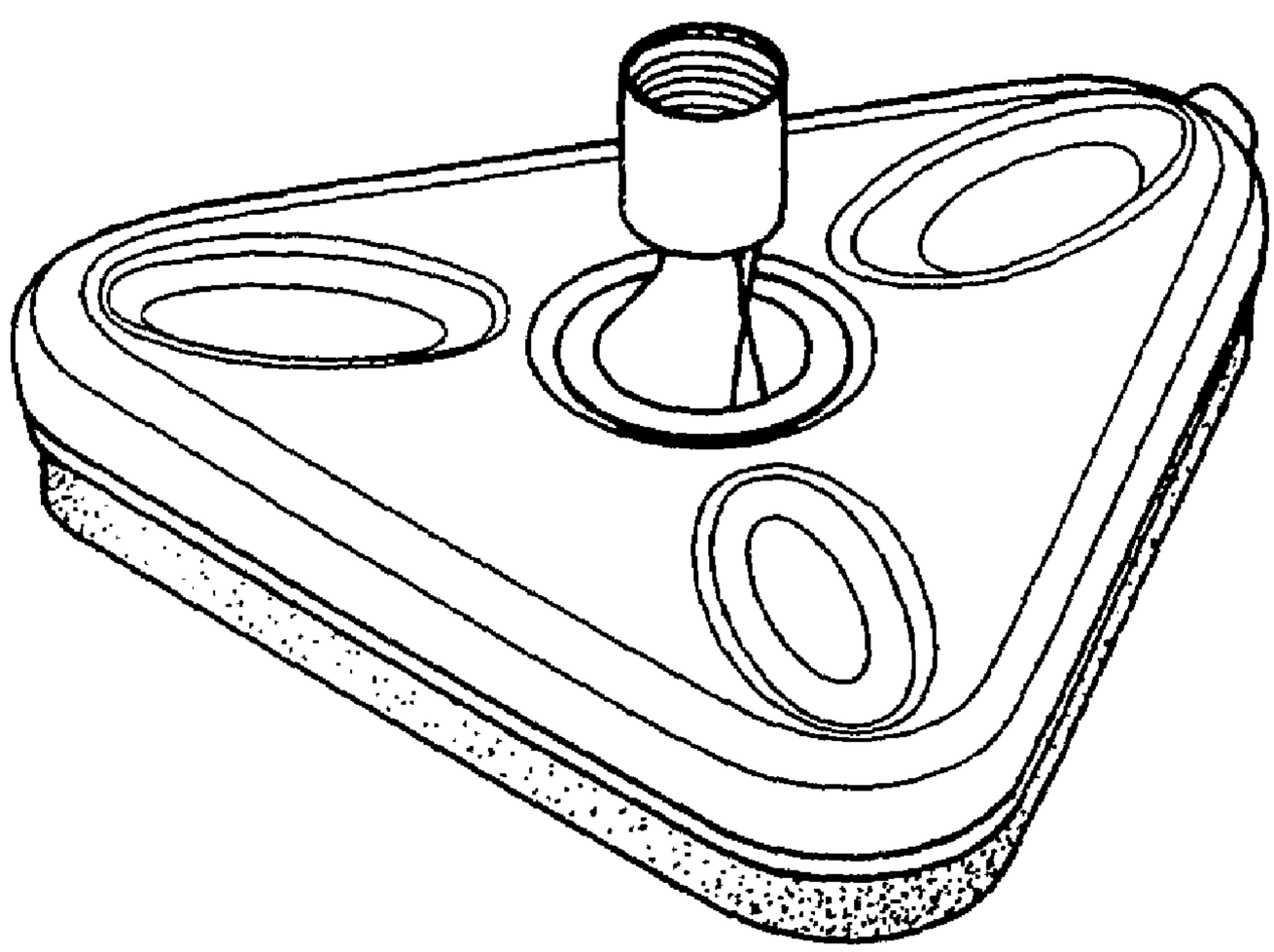

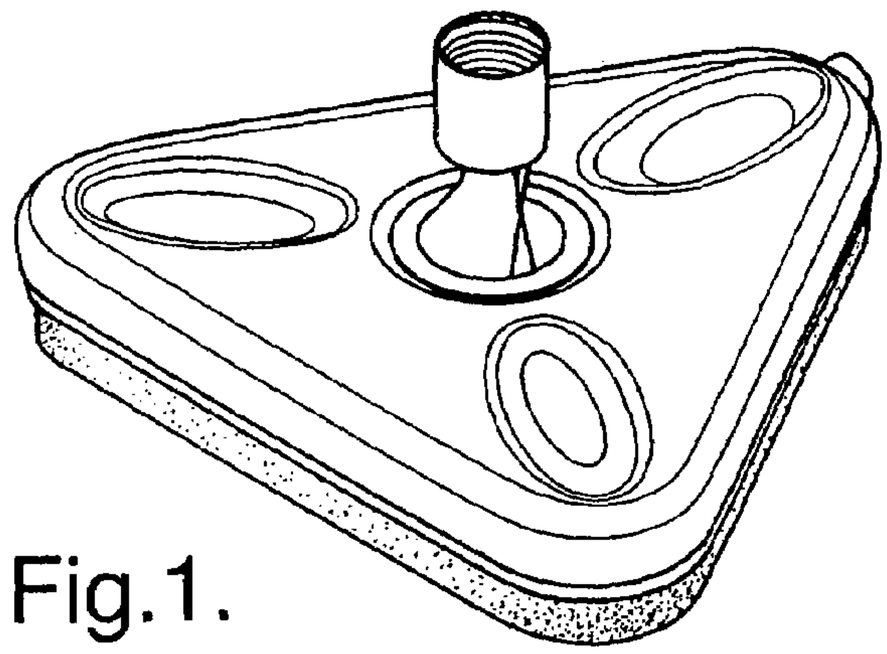

Fig.1.

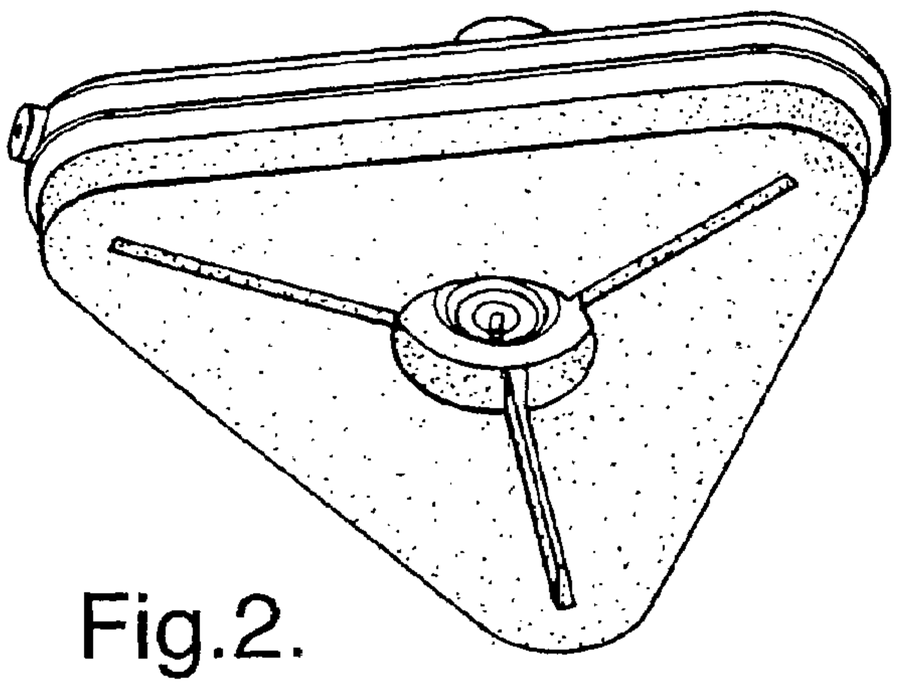

Fig.2.

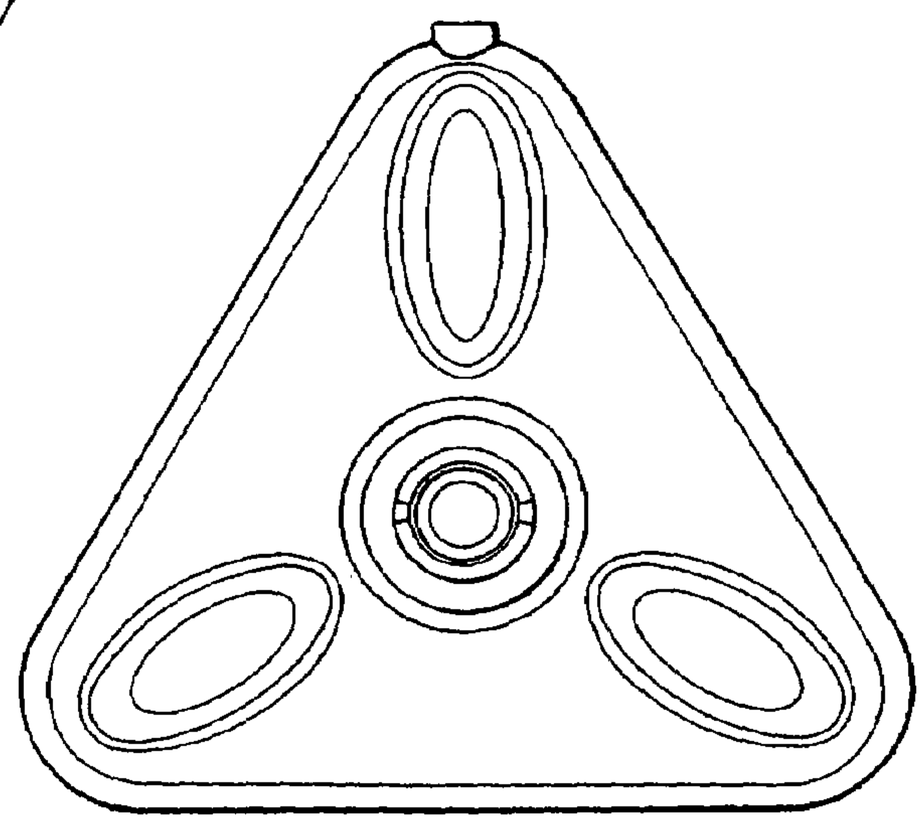

Fig.3.

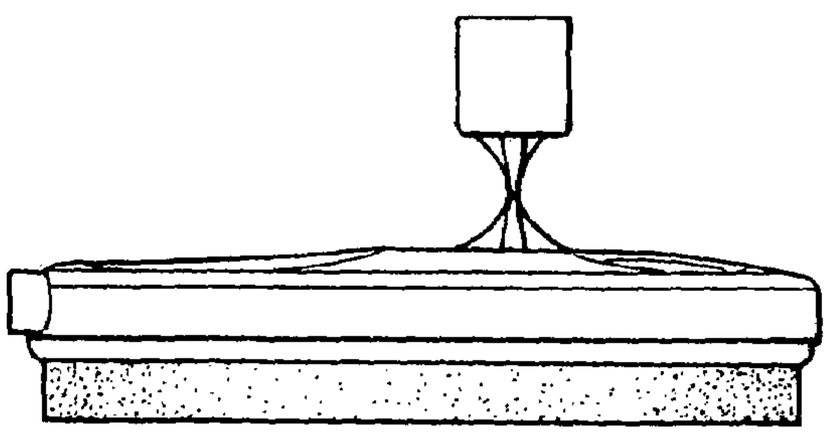

Fig.4.

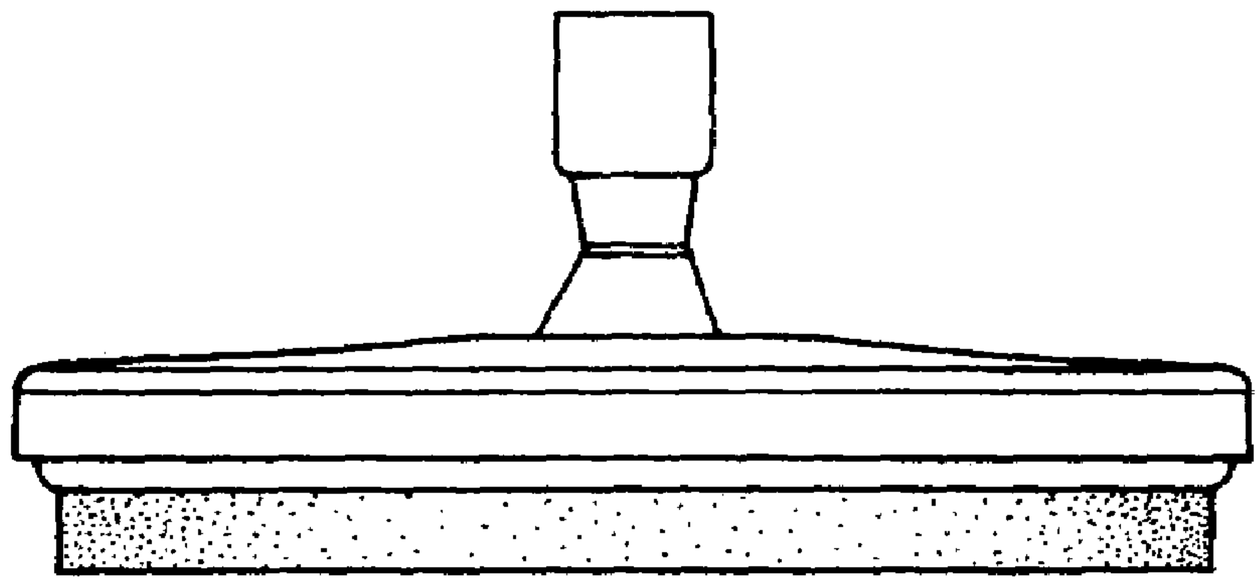

Fig.5.

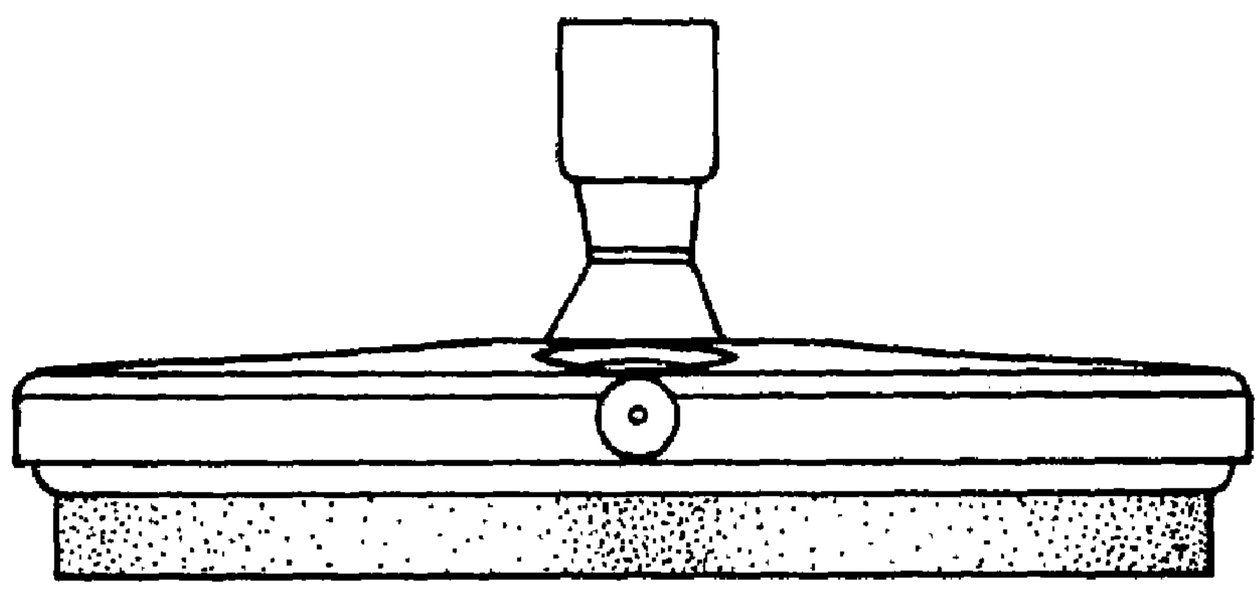

Fig.6.

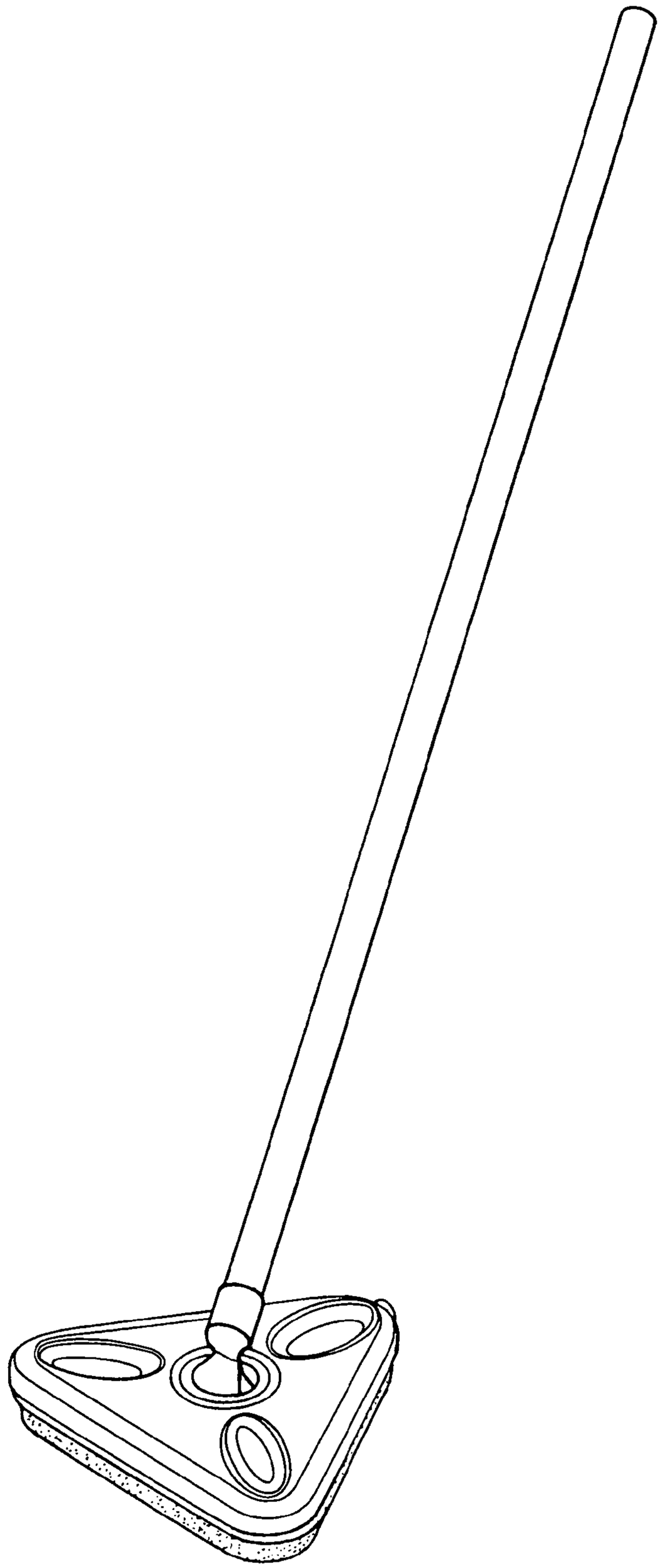

Fig.7.

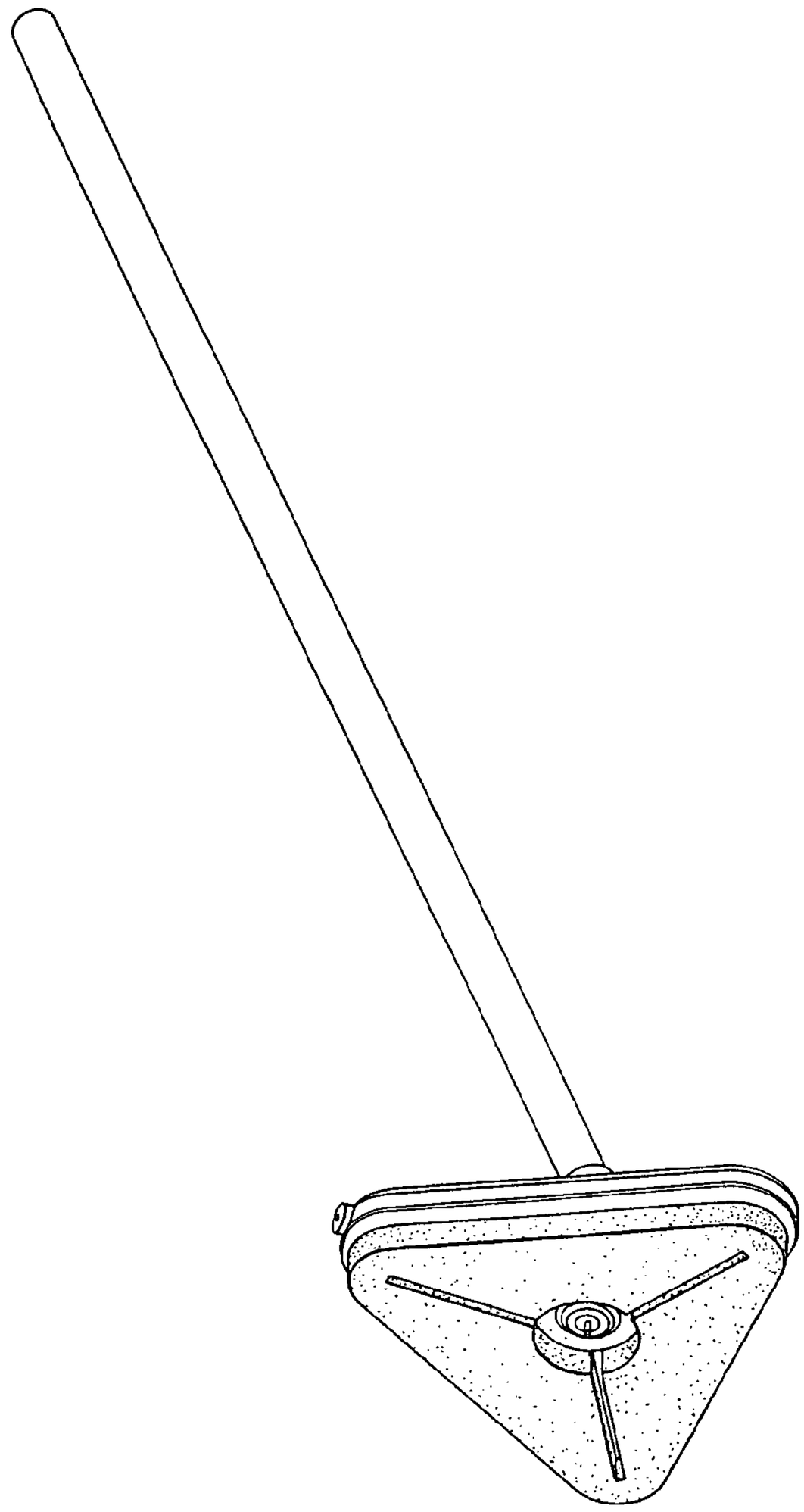

Fig.8.

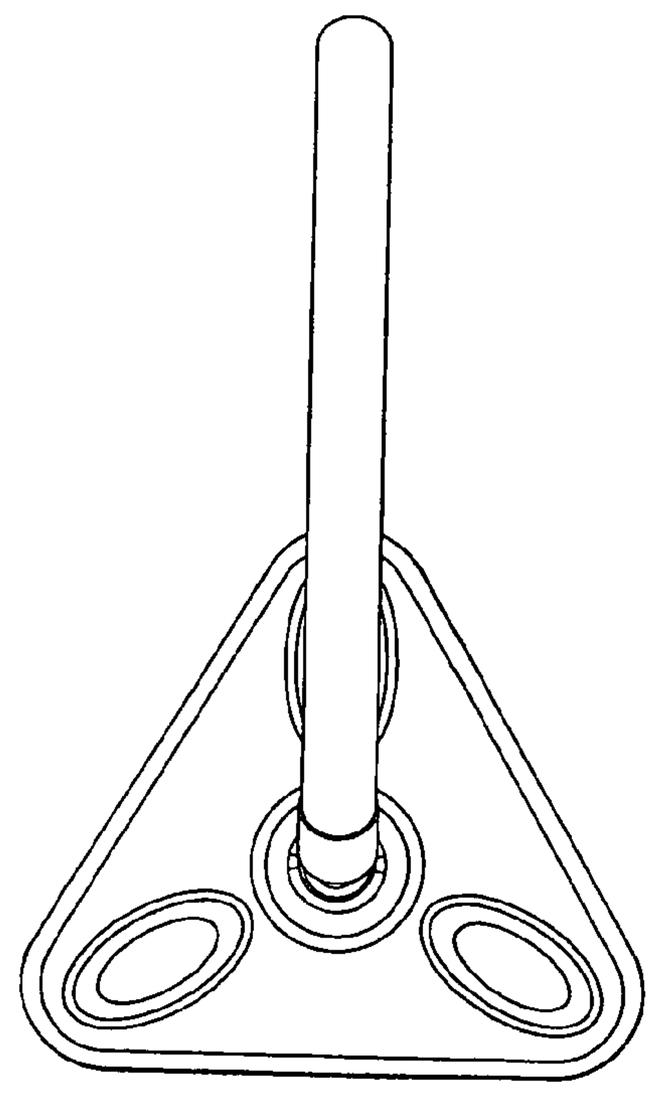

Fig.9.

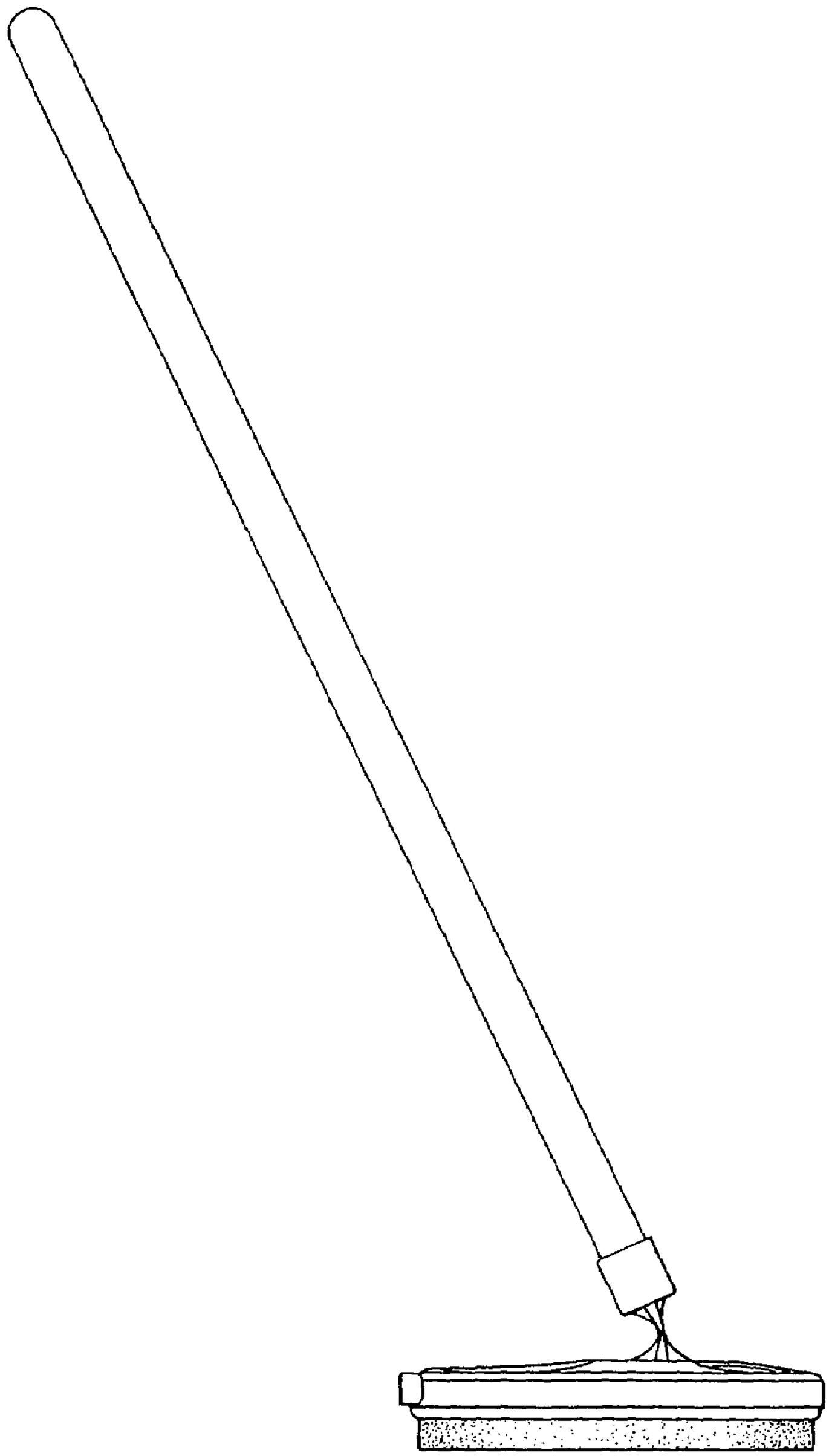

Fig.10.