US00D543982S

(12) United States Design Patent

Hasegawa et al.

(10) Patent No.: US D543,982 S
(45) Date of Patent: ** Jun. 5, 2007

(54) **COMPUTER DISPLAY**

(75) Inventors: **Kenichi Hasegawa**, Tokyo (JP); **Yoshihiro Takechi**, Tokyo (JP); **Satoshi Kurihara**, Tokyo (JP); **Naoto Fukasawa**, Tokyo (JP)

(73) Assignee: **NEC Display Solutions, Ltd.**, Tokyo (JP)

(**) Term: **14 Years**

(21) Appl. No.: **29/247,416**

(22) Filed: **Jun. 16, 2006**

(30) **Foreign Application Priority Data**

Dec. 28, 2005 (JP) 2005-038529

(51) **LOC (8) Cl.** **14-02**
(52) **U.S. Cl.** **D14/371**
(58) **Field of Classification Search** D14/371–375, D14/125–129, 133; 345/104, 156, 168, 173; 348/180, 184, 325, 739, 837; 248/917–924, 248/278.1; 349/1, 2, 11, 62; 341/12
See application file for complete search history.

(56) **References Cited**

U.S. PATENT DOCUMENTS

D417,659 S * 12/1999 Takemasa D14/374
D434,738 S * 12/2000 Takemasa D14/133
D460,425 S * 7/2002 Joe D14/126
D494,941 S * 8/2004 Kim D14/126
6,837,469 B2 * 1/2005 Wu et al. 248/278.1
D515,523 S * 2/2006 Asanuma et al. D14/129

* cited by examiner

Primary Examiner—Freda S. Nunn
(74) *Attorney, Agent, or Firm*—Darby & Darby

(57) **CLAIM**

The ornamental design for a computer display, as shown and described.

DESCRIPTION

FIG. **1** is a perspective view of a computer display.

FIG. **2** is a front elevation view thereof.

FIG. **3** is a rear elevation view thereof.

FIG. **4** is a top plan view thereof.

FIG. **5** is a bottom plan view thereof.

FIG. **6** is a left side elevation view thereof.

FIG. **7** is a right side elevation view thereof; and,

FIG. **8** is a cross-sectional view thereof taken along line **8**—**8** in FIG. **2**, which omits the internal structure.

1 Claim, 8 Drawing Sheets

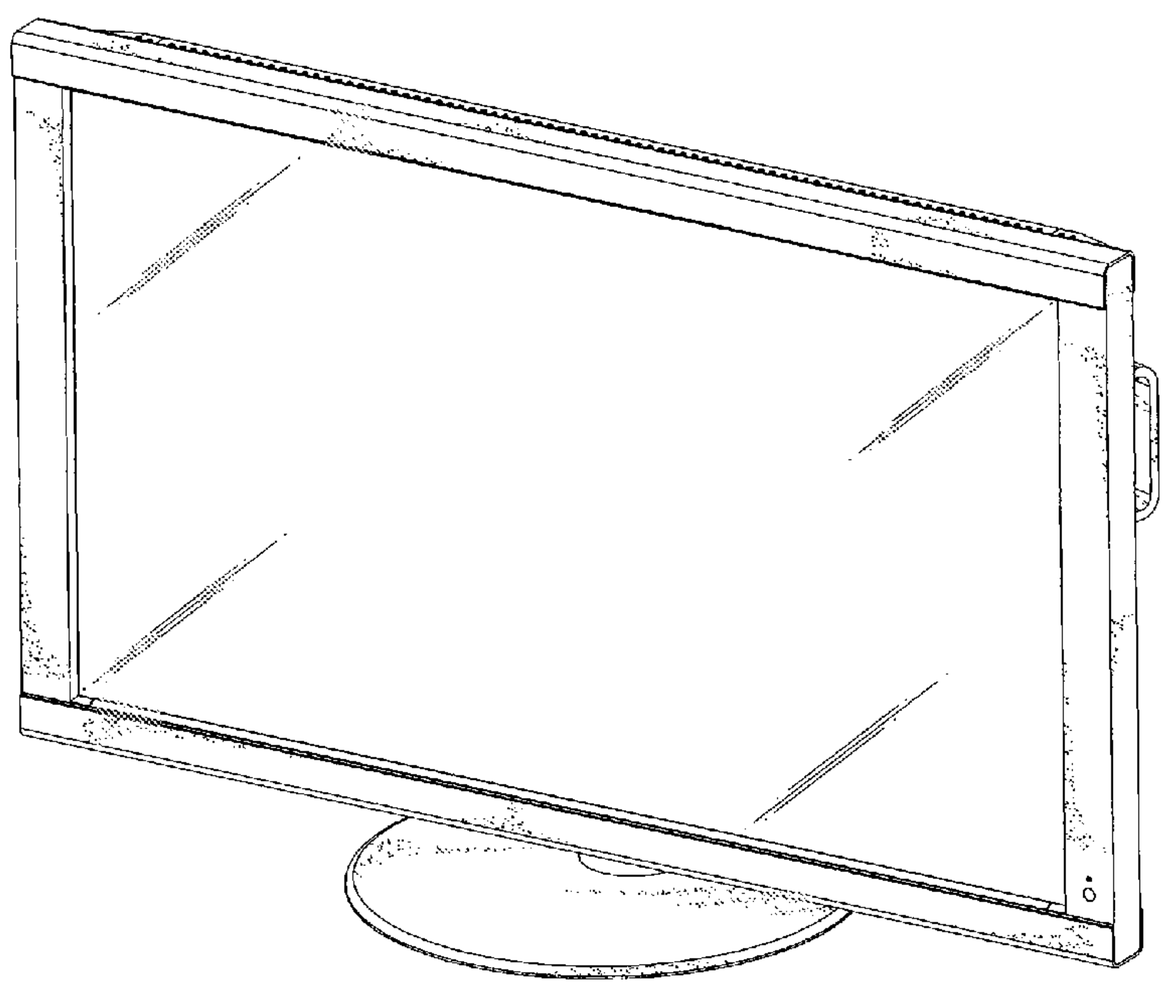

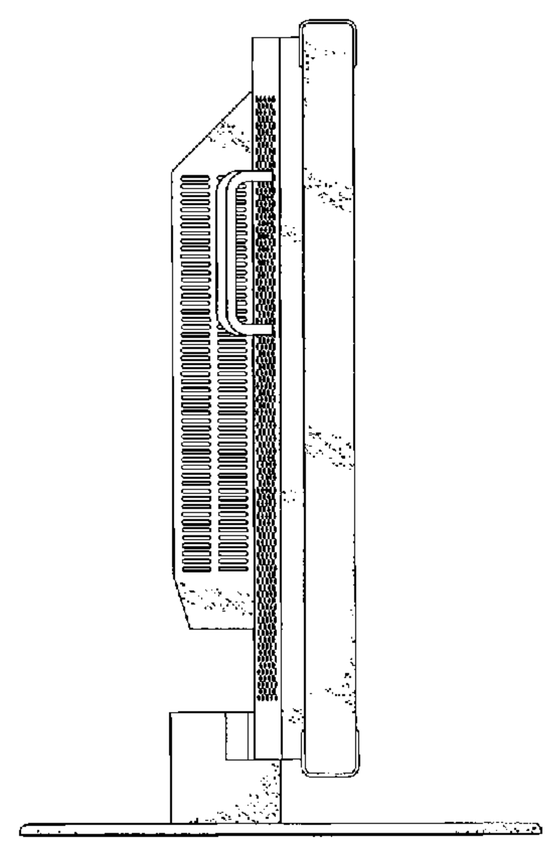

FIG. 1

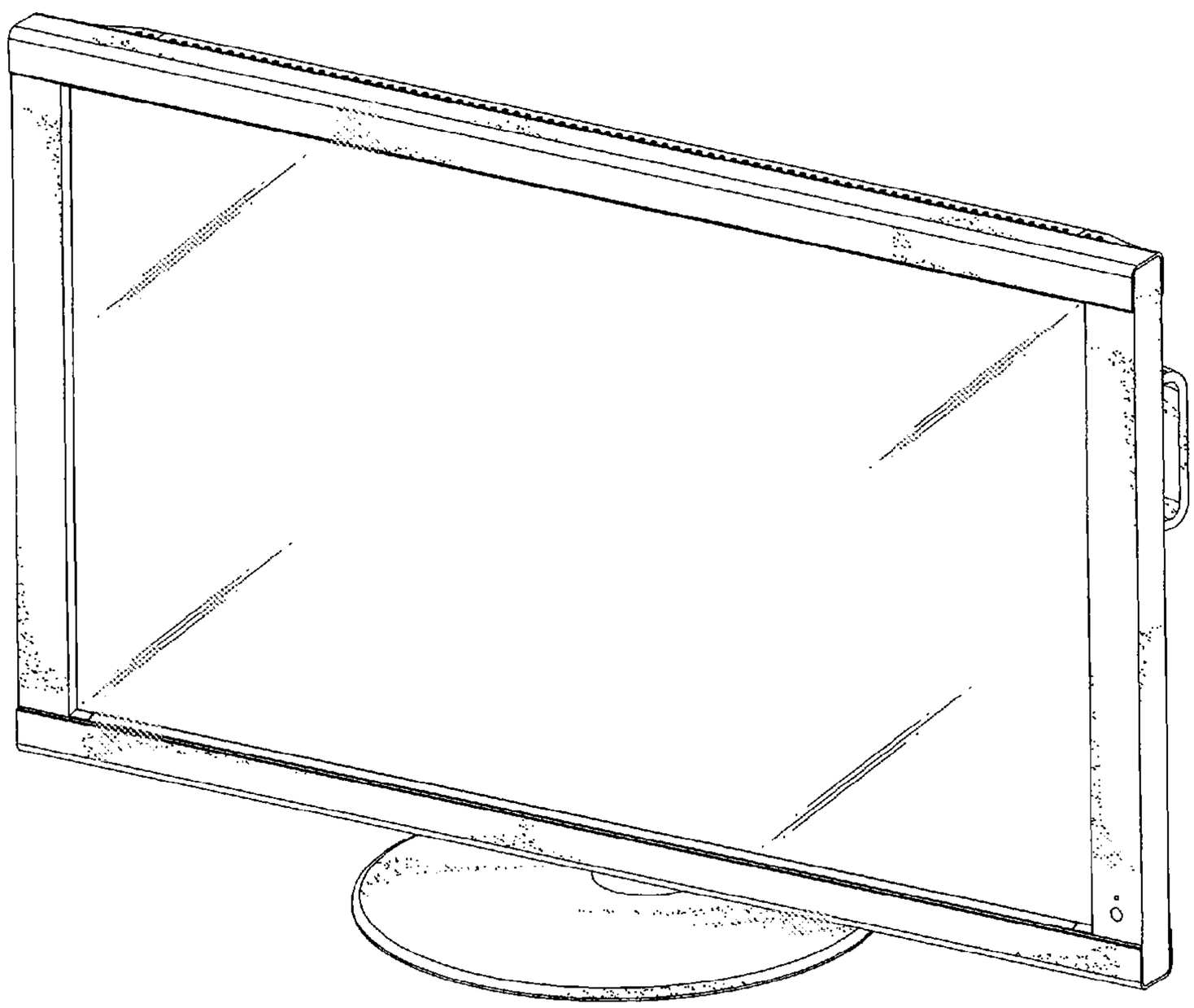

FIG. 2

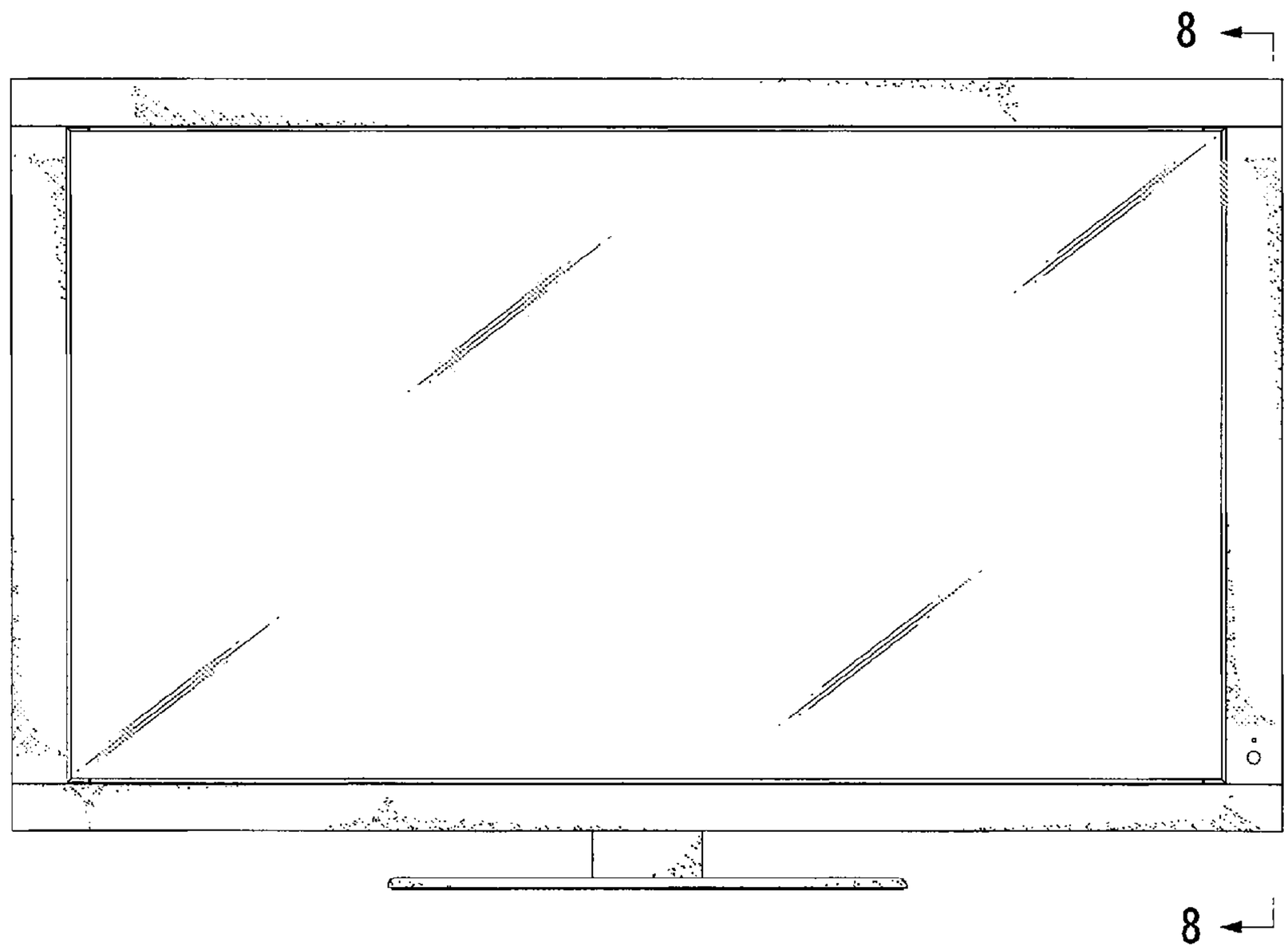

FIG. 3

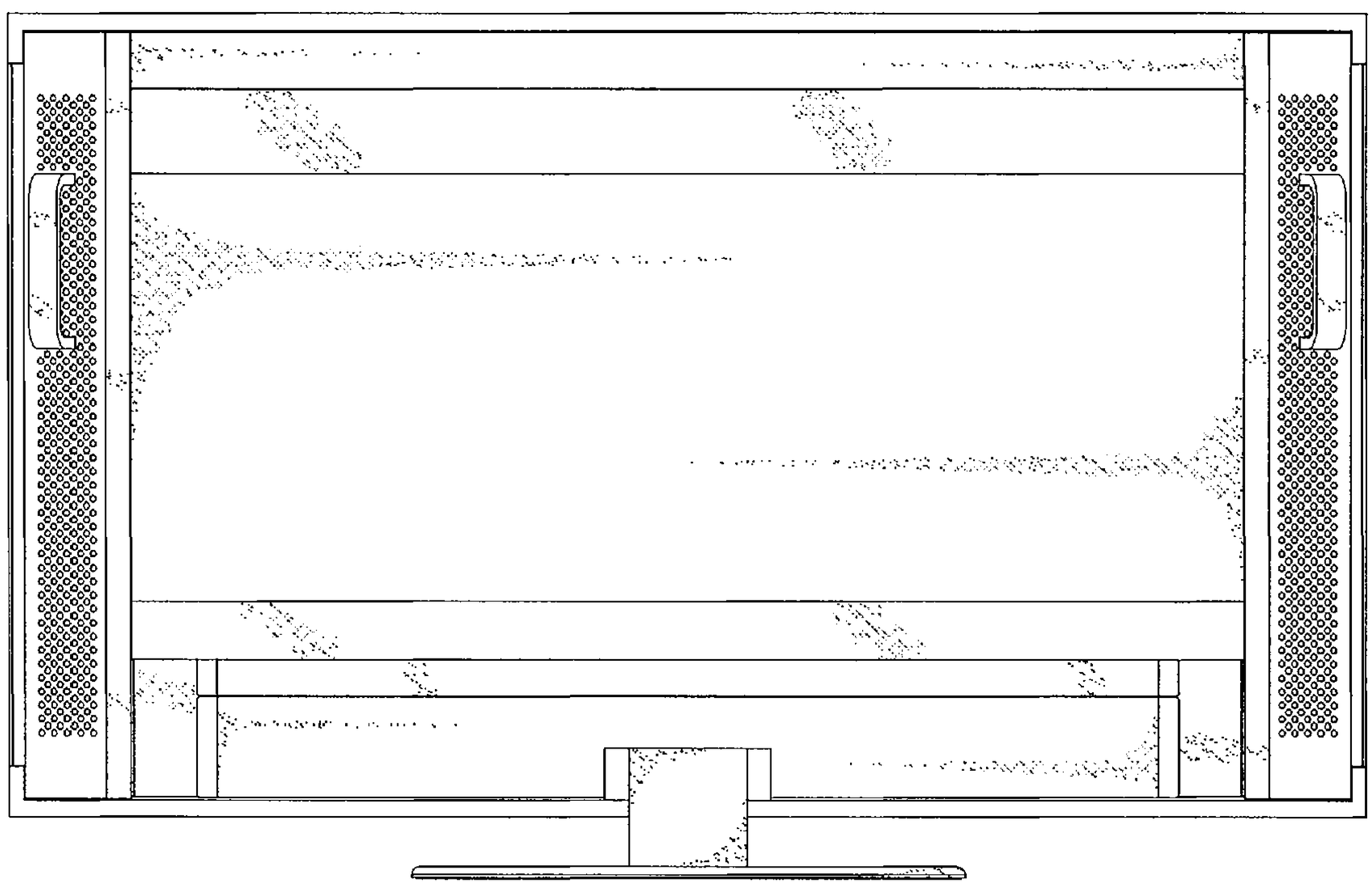

FIG. 4

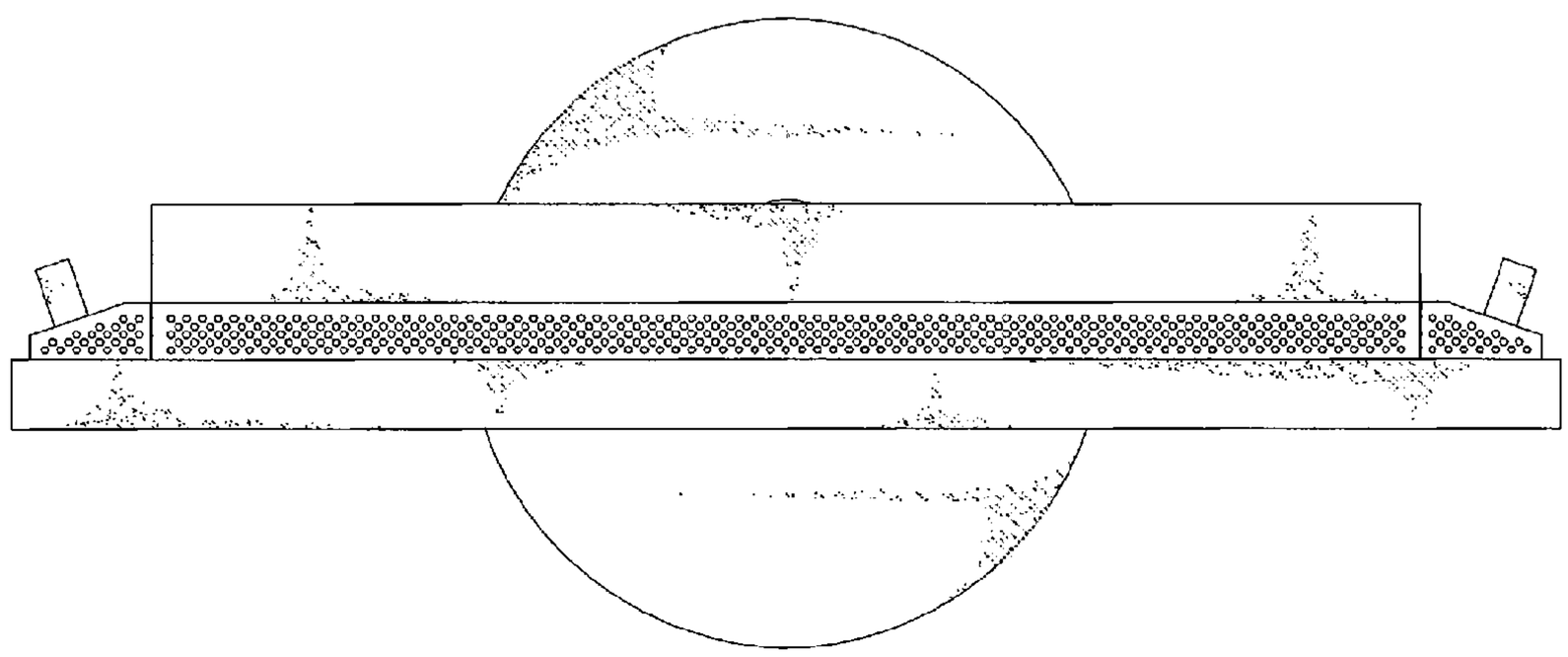

FIG. 5

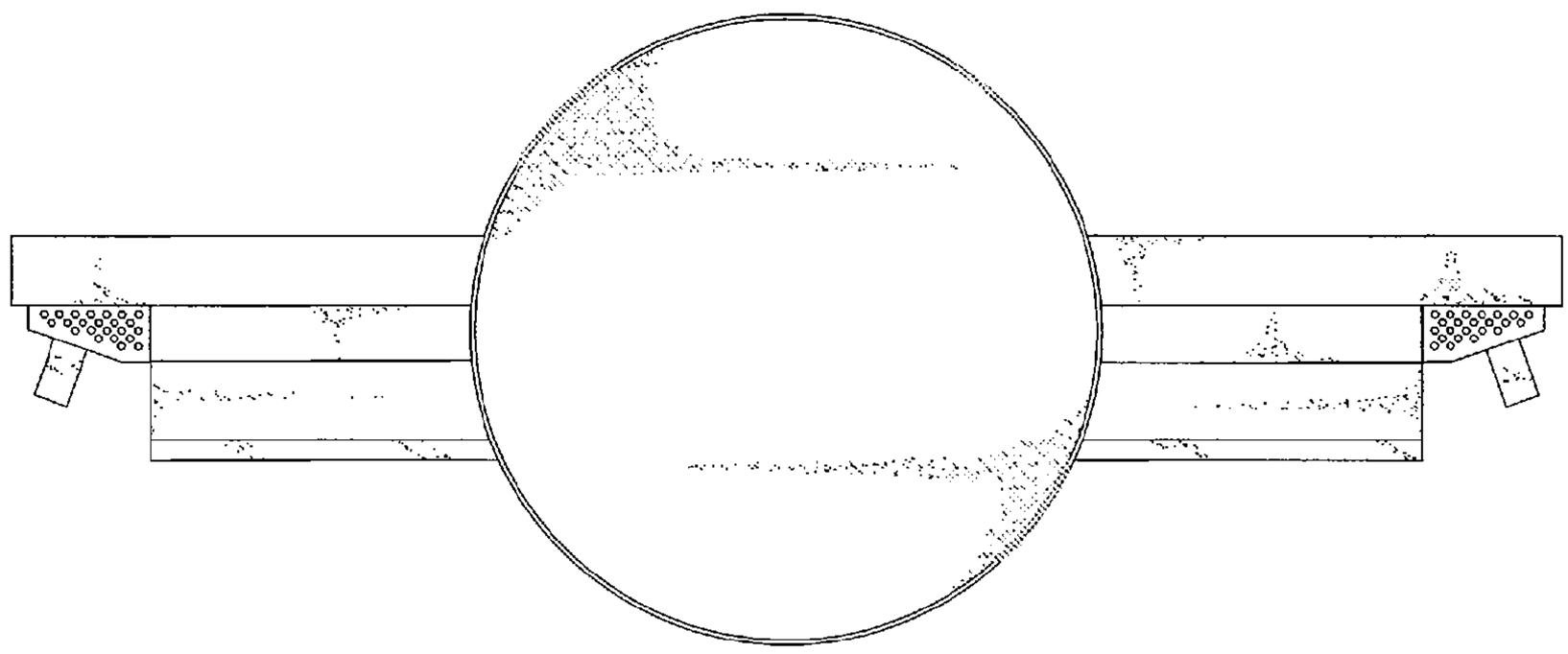

FIG. 6

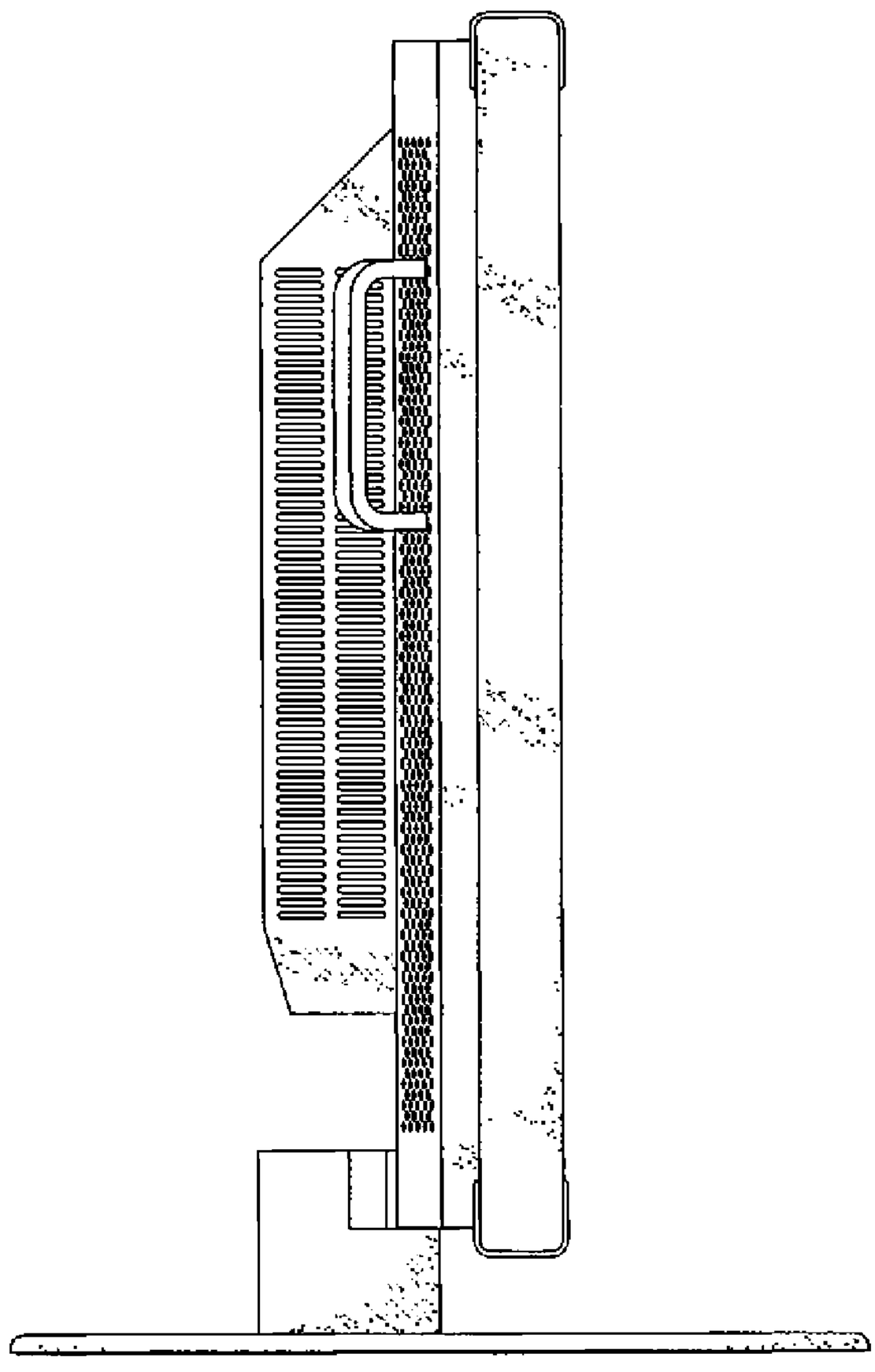

FIG. 7

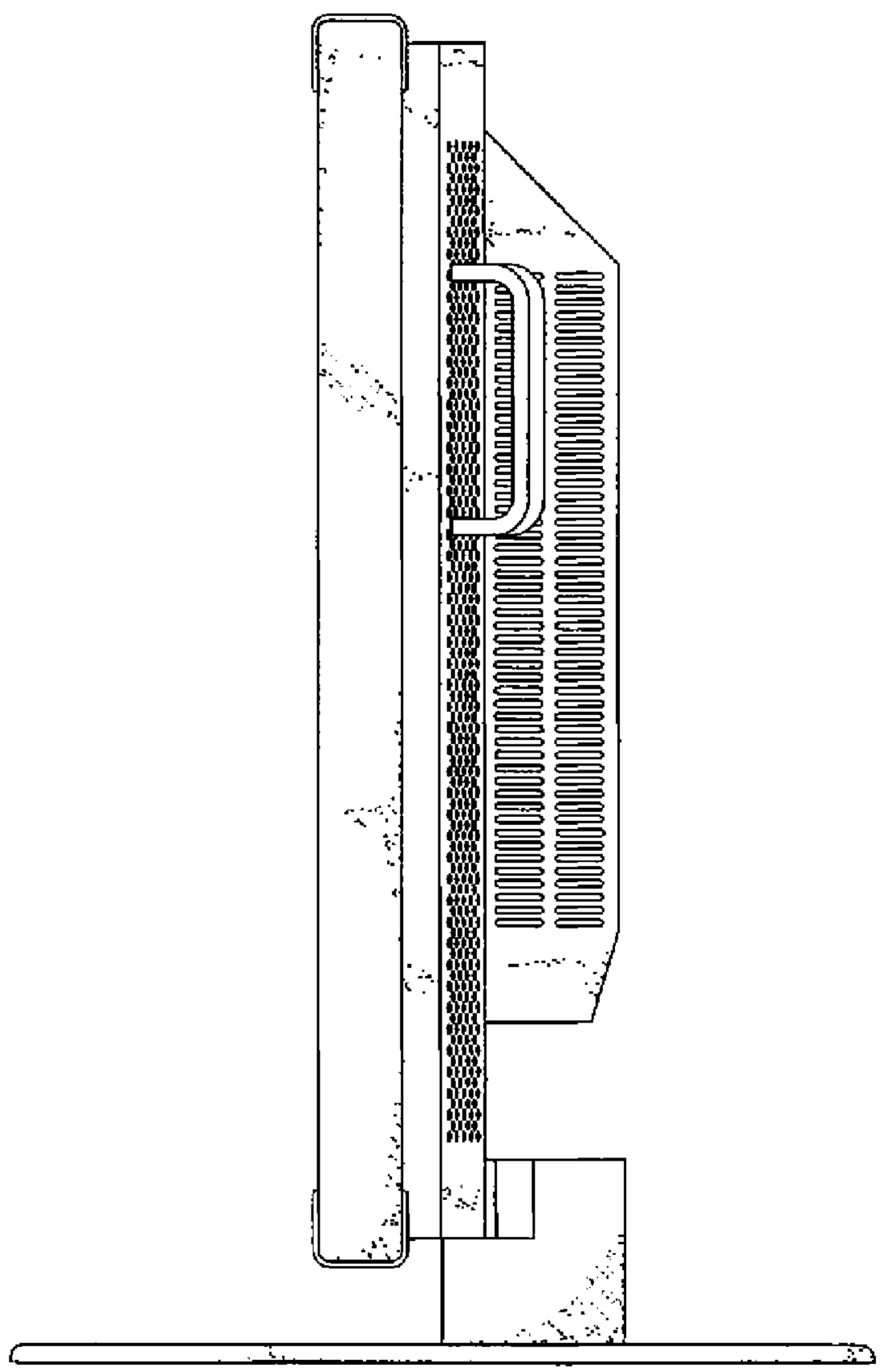
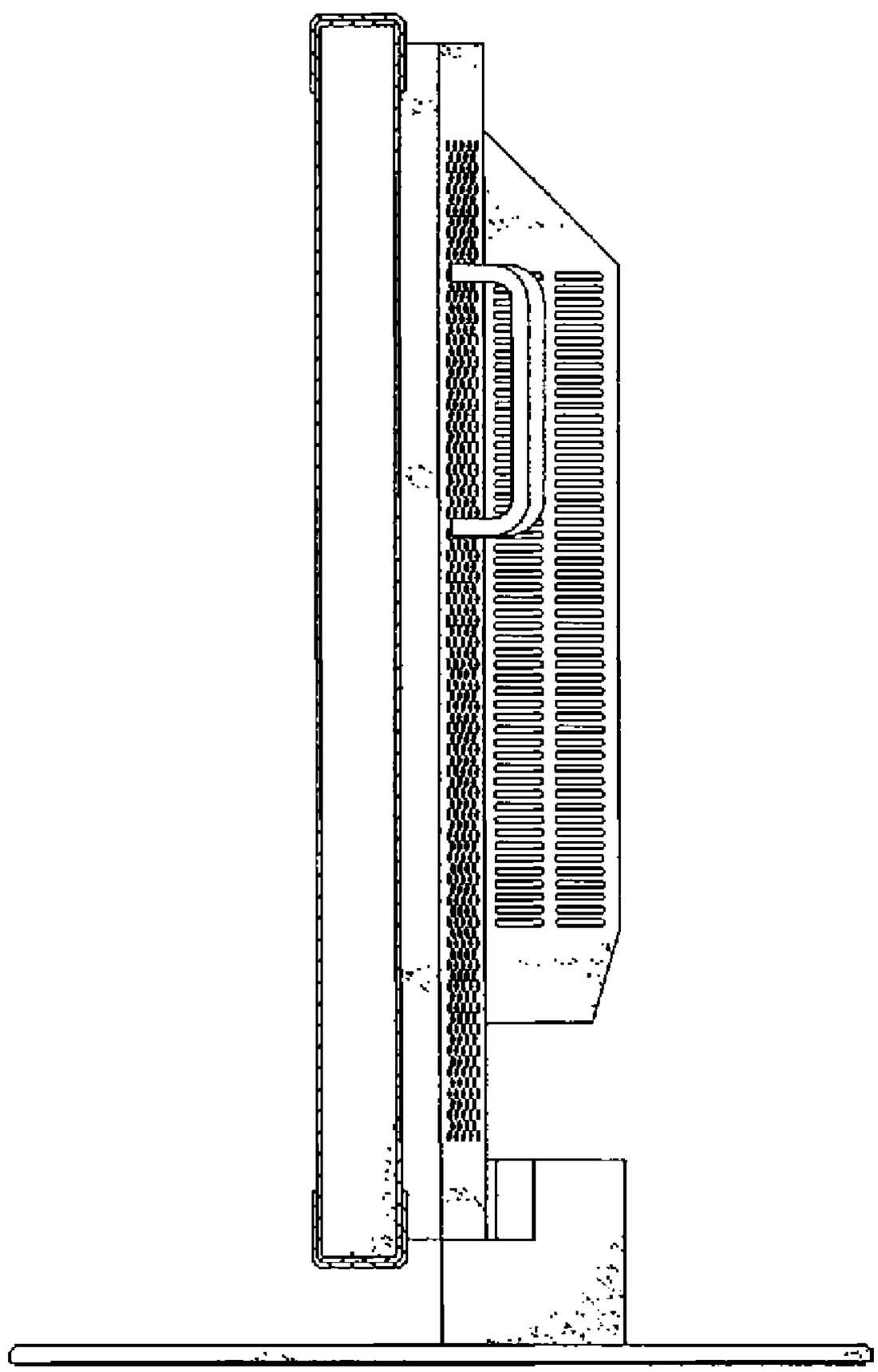
FIG. 8