US00D541849S

(12) United States Design Patent

King et al.

(10) Patent No.: US D541,849 S
(45) Date of Patent: ** May 1, 2007

(54) **WALL MOUNTING PRINTER**

(75) Inventors: **Tobin Allen King**, Balmain (AU); **Kia Silverbrook**, Balmain (AU)

(73) Assignee: **Silverbrook Research Pty Ltd**, Balmain, NSW (AU)

(**) Term: **14 Years**

(21) Appl. No.: **29/219,502**

(22) Filed: **Dec. 20, 2004**

(51) **LOC (8) Cl.** **14-02**
(52) **U.S. Cl.** **D18/50**
(58) **Field of Classification Search** D18/14, D18/19, 36–39, 50, 54, 54.1, 55; D14/420–425, D14/462–470; D16/237, 247–248; 400/613, 400/613.1–613.4, 690.1–690.4, 691–694; 399/109
See application file for complete search history.

(56) **References Cited**

U.S. PATENT DOCUMENTS

D232,866 S * 9/1974 Mann D18/53
D366,896 S * 2/1996 Isomoto et al. D18/39
D432,563 S * 10/2000 Lin et al. D18/50
D462,378 S * 9/2002 Hattori D18/19

* cited by examiner

Primary Examiner—Cathy Anne MacCormac

(57) **CLAIM**

We claim the ornamental design for a wall mounting printer, as shown.

DESCRIPTION

FIG. **1** is a front and right side perspective view of a wall mounting printer, showing the print collection tray in retracted position, showing our new design;
FIG. **2** is a front and bottom perspective view thereof;
FIG. **3** is a front elevation view thereof;
FIG. **4** is a left elevation view thereof;
FIG. **5** is a bottom view thereof;
FIG. **6** is a plan view thereof;
FIG. **7** is a rear view thereof;
FIG. **8** is a front and right side perspective view thereof showing the print collection tray in extended position; and,
FIG. **9** is a rear and right side perspective view of FIG. **8**.
The broken lines are for illustrative purposes only and form no part of the claimed design.

1 Claim, 8 Drawing Sheets

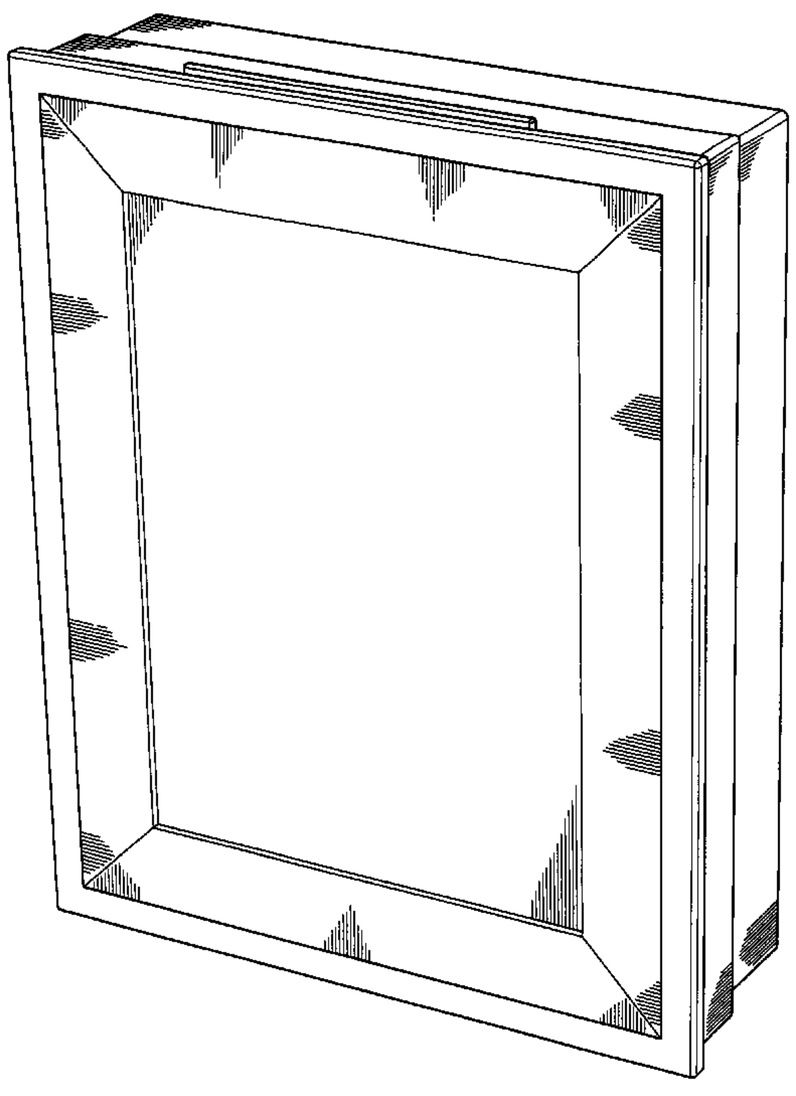

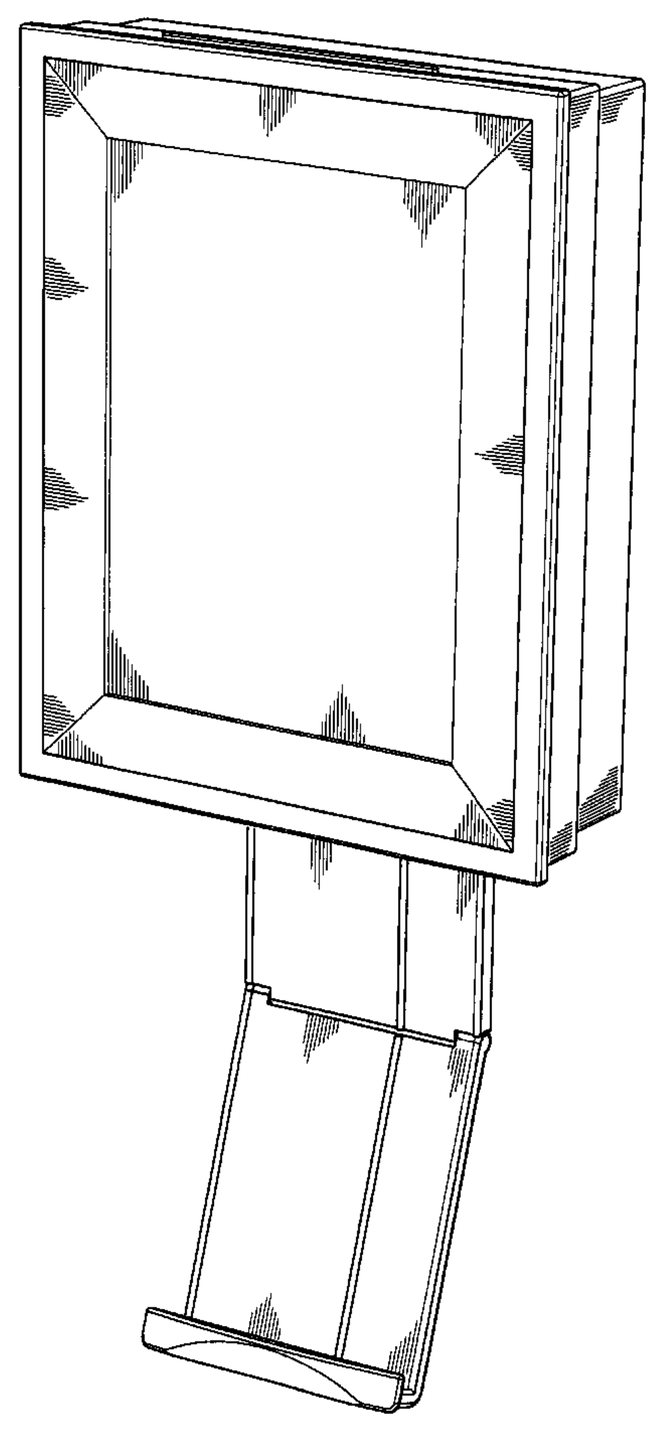

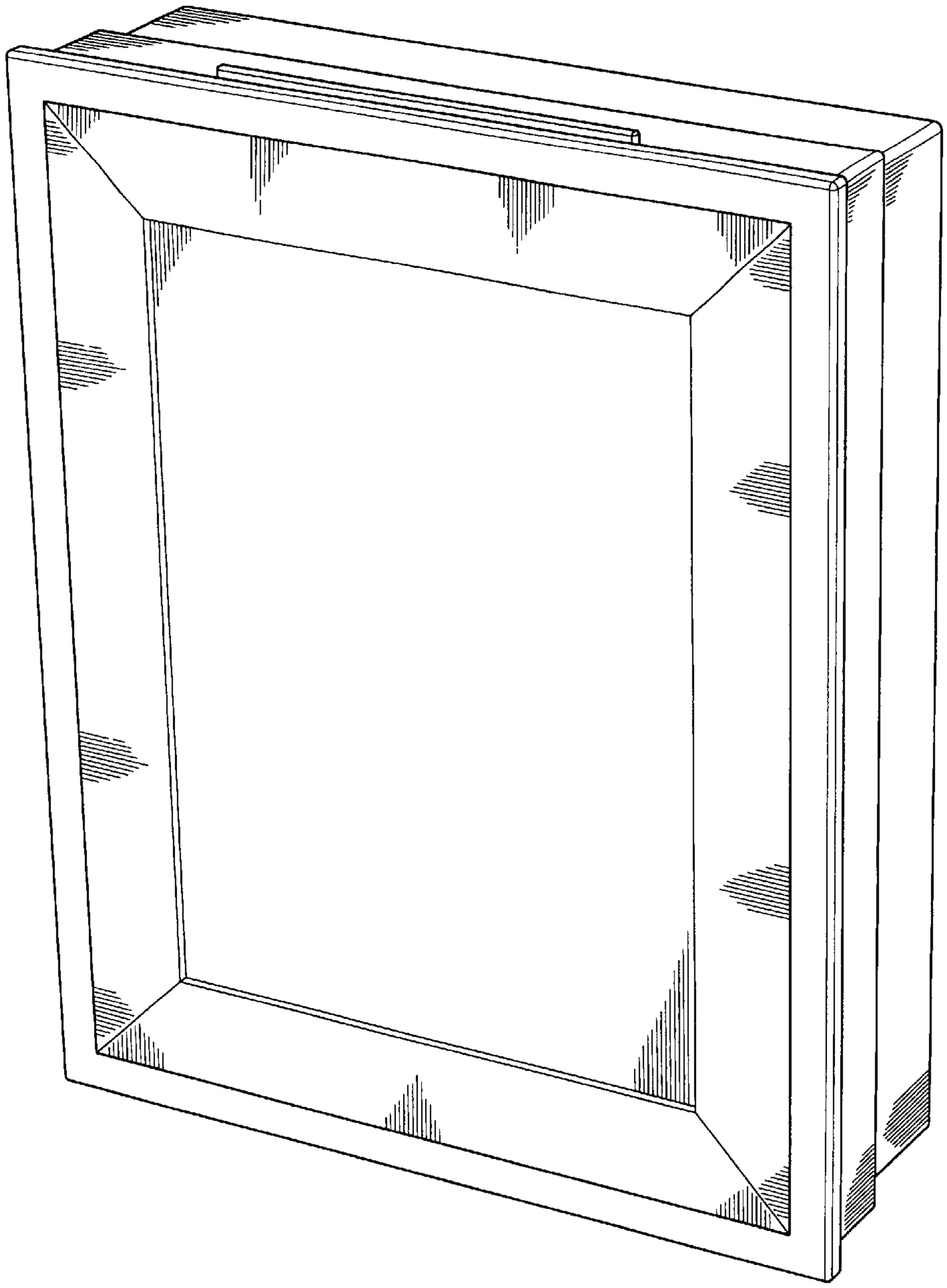

FIG. 1

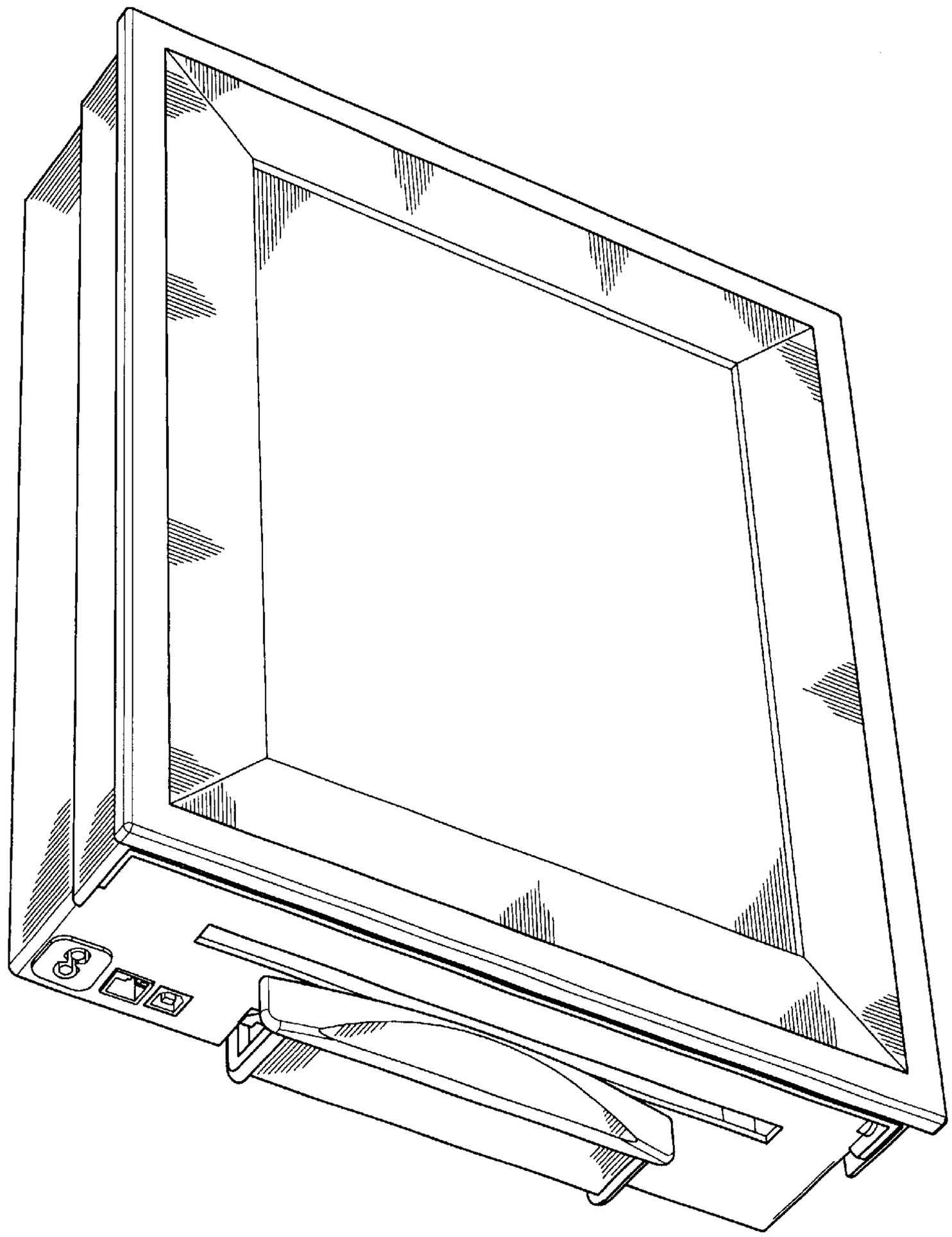

FIG. 2

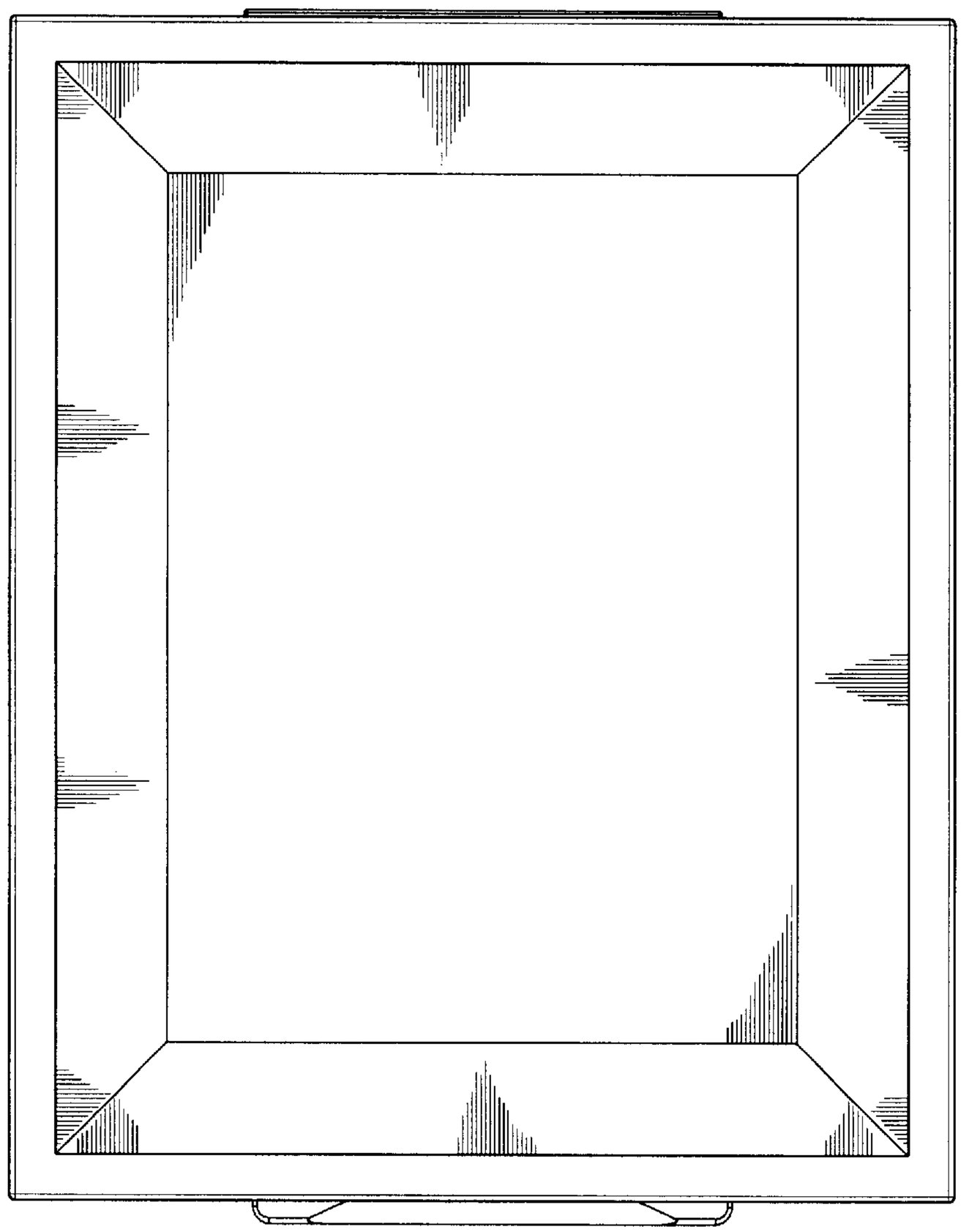

FIG. 3

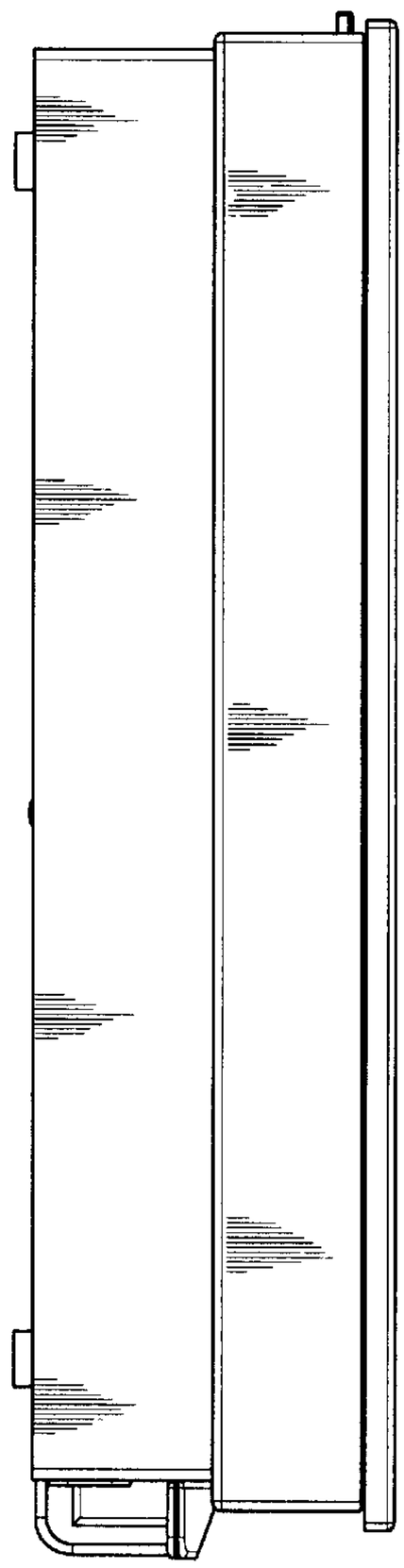

FIG. 4

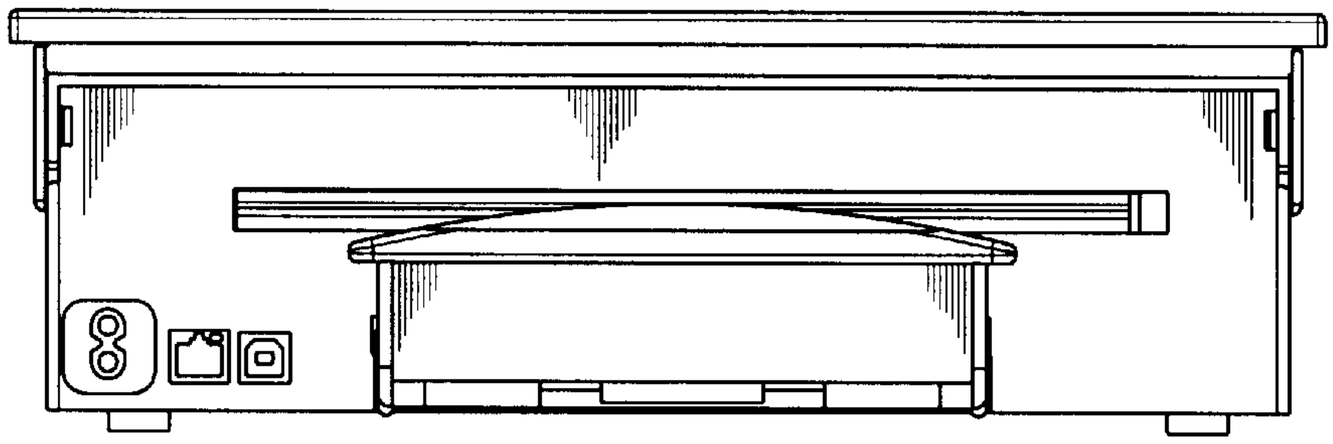

FIG. 5

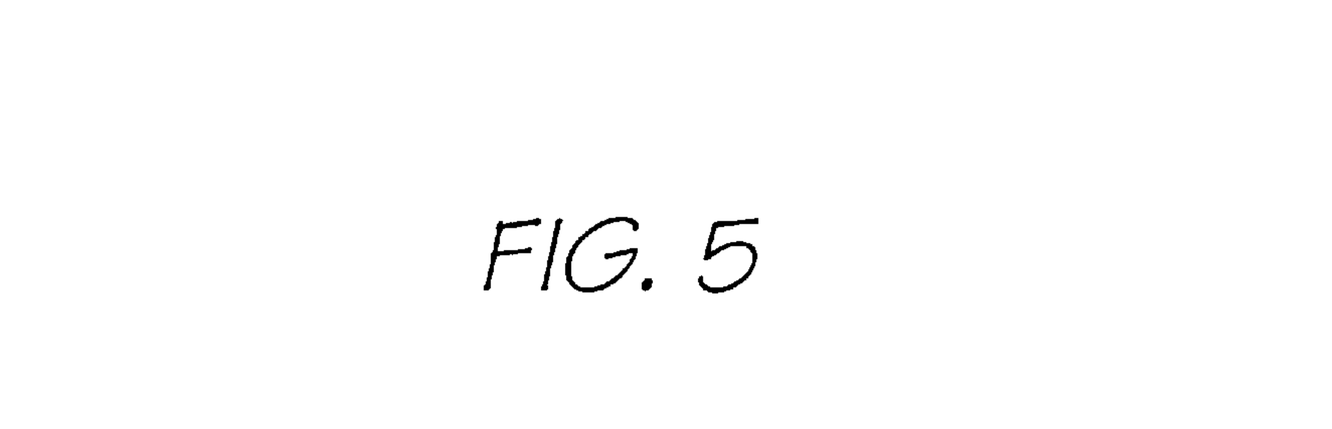

FIG. 6

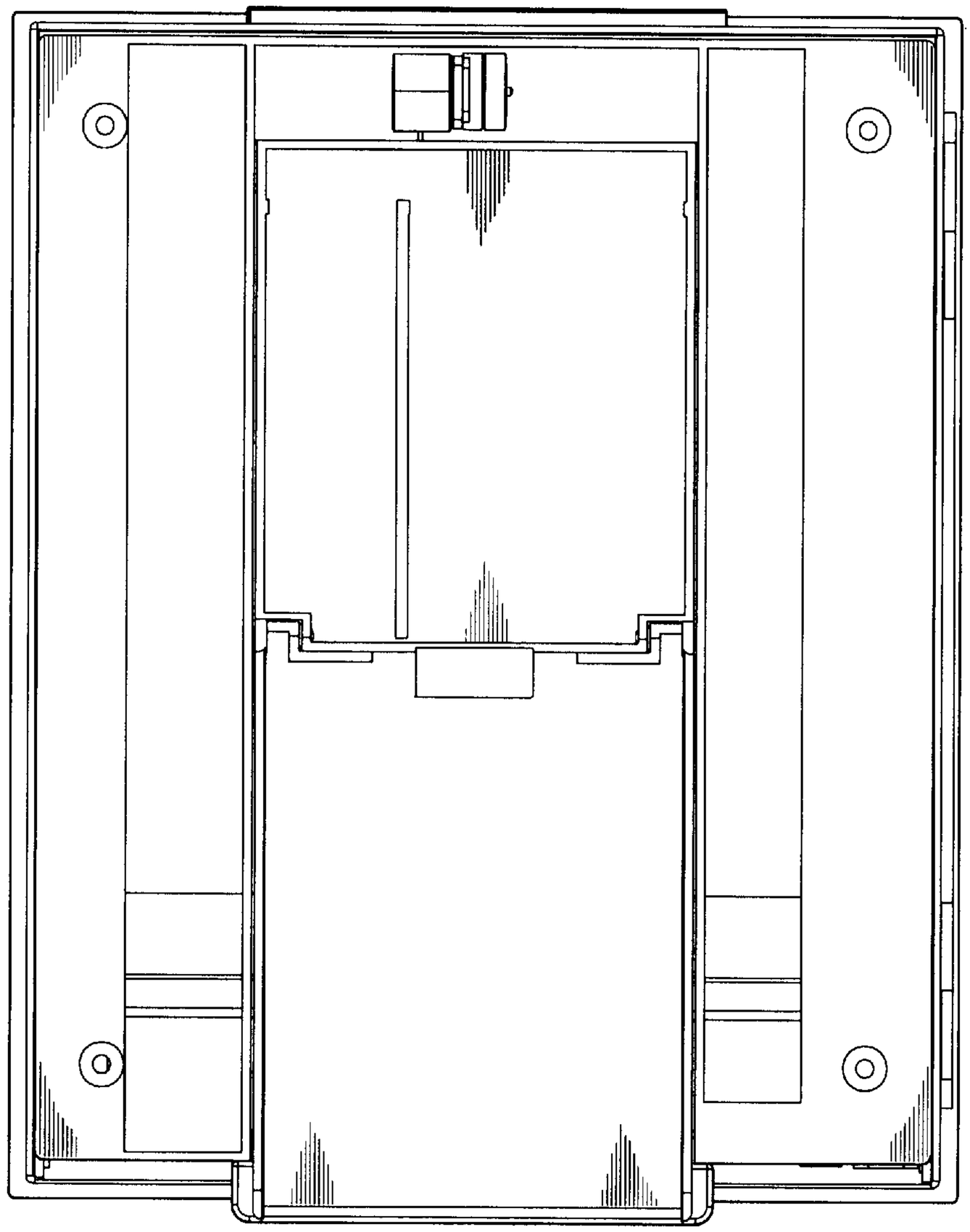

FIG. 7

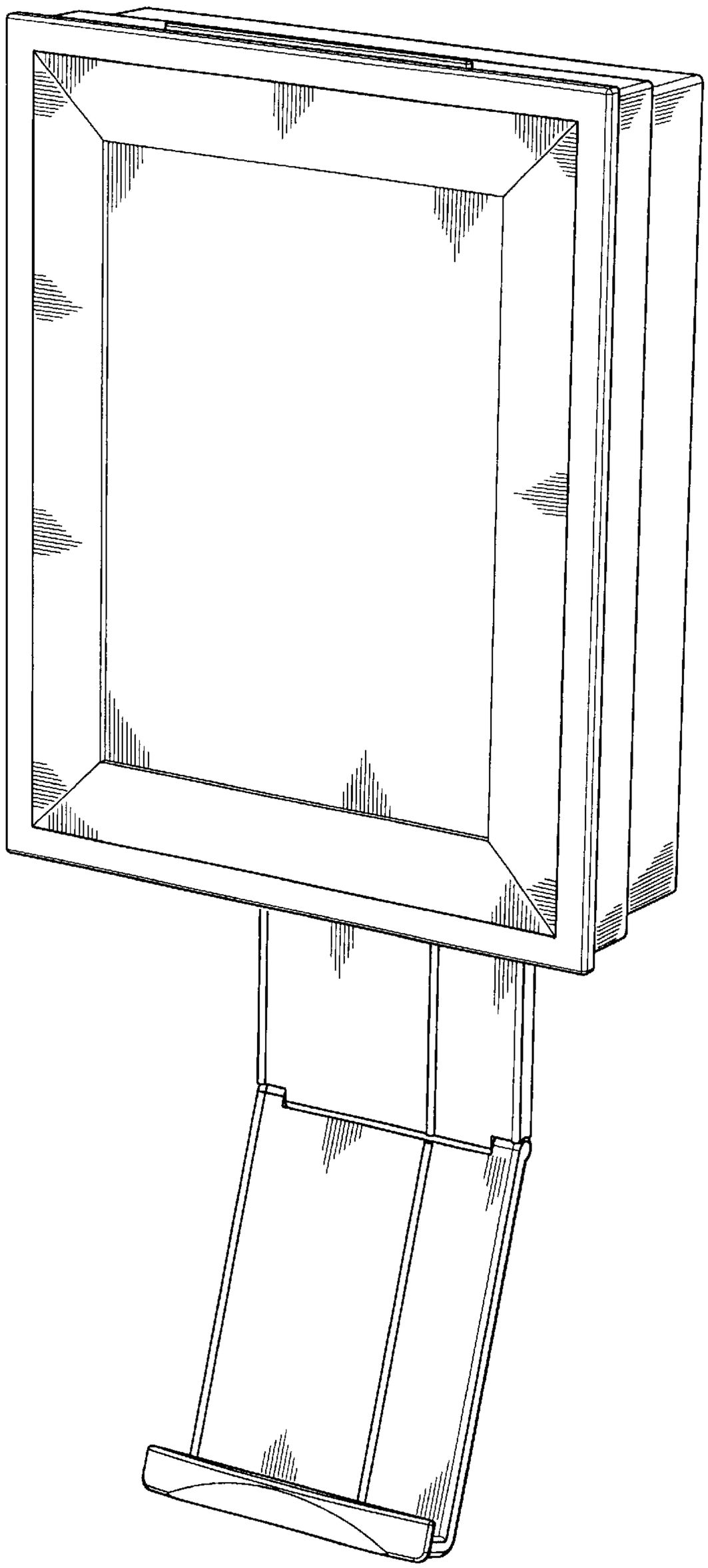

FIG. 8

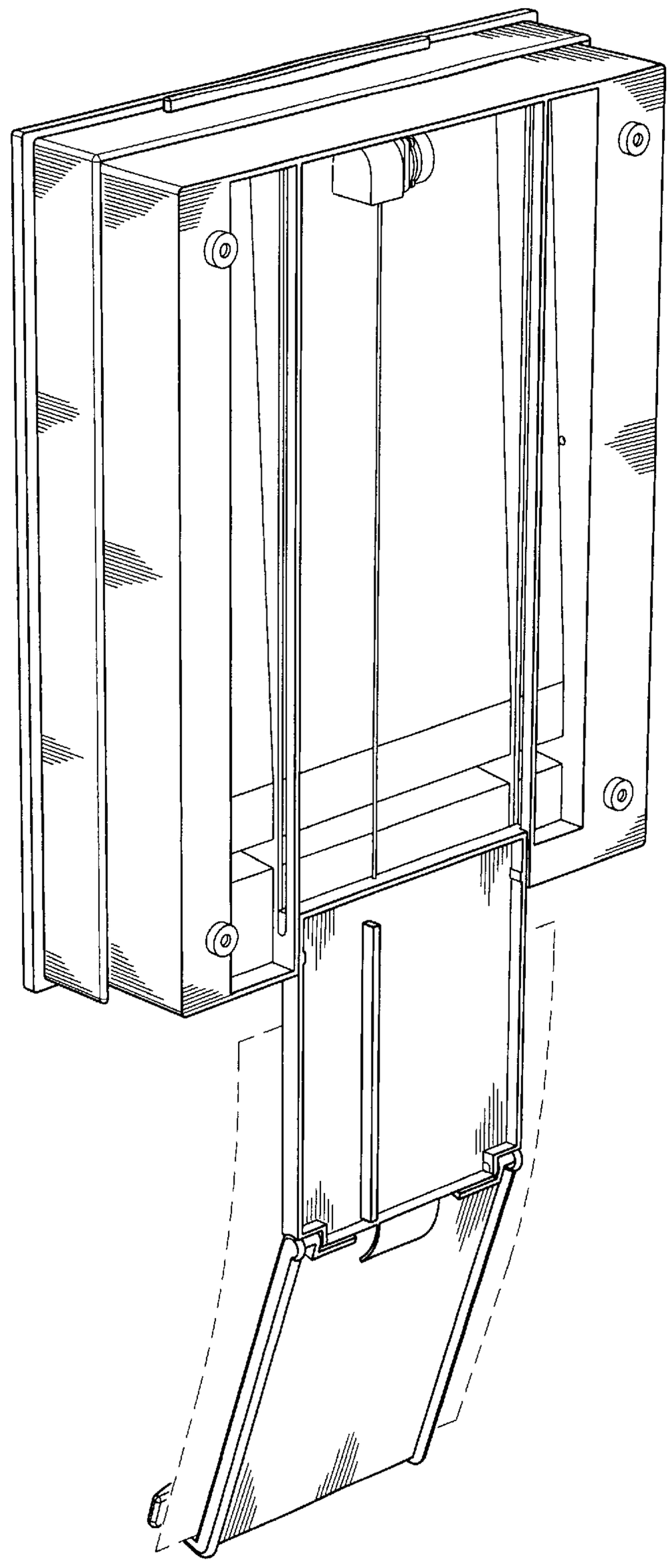

FIG. 9