US00D539917S

(12) United States Design Patent

Park

(10) Patent No.: US D539,917 S
(45) Date of Patent: ** Apr. 3, 2007

(54) **MASSAGE APPARATUS**

(75) Inventor: **Yong Joo Park**, 402, Donghwa Villa, 1527-6, Seocho-3Dong, Seocho-ku, Seoul (KR)

(73) Assignee: **Yong Joo Park**, Seoul (KR)

(**) Term: **14 Years**

(21) Appl. No.: **29/261,907**

(22) Filed: **Jun. 22, 2006**

(30) **Foreign Application Priority Data**

Dec. 23, 2005 (KR) 30-2005-0043598

(51) **LOC (8) Cl.** **28-03**
(52) **U.S. Cl.** **D24/215**
(58) **Field of Classification Search** D24/200, D24/211–215; 601/15, 17, 18, 19–22, 84, 601/85, 94, 102–104, 112–114, 131, 134, 601/135
See application file for complete search history.

(56) **References Cited**

U.S. PATENT DOCUMENTS

D351,474 S * 10/1994 Huang D24/211
D369,220 S * 4/1996 Huang D24/215
D466,217 S * 11/2002 Harris et al. D24/215
D476,087 S * 6/2003 Dirks et al. D24/215
D517,218 S * 3/2006 Kalen D24/215
D527,144 S * 8/2006 Crawford et al. D28/8.1

* cited by examiner

Primary Examiner—Ian Simmons
Assistant Examiner—Melanie Levy
(74) *Attorney, Agent, or Firm*—Knobbe, Martens, Olson & Bear, LLP

(57) **CLAIM**

I claim the ornamental design for a massage apparatus, as shown and described.

DESCRIPTION

FIG. **1** is a perspective view of a massage apparatus in accordance with the present invention;
FIG. **2** is a front view of the massage apparatus of FIG. **1**;
FIG. **3** is a rear view of the massage apparatus of FIG. **1**;
FIG. **4** is a left side view of the massage apparatus of FIG. **1**;
FIG. **5** is a right side view of the massage apparatus of FIG. **1**;
FIG. **6** is a top plan view of the massage apparatus of FIG. **1**; and,
FIG. **7** is a bottom plan view of the massage apparatus of FIG. **1**.

1 Claim, 4 Drawing Sheets

FIG. 1

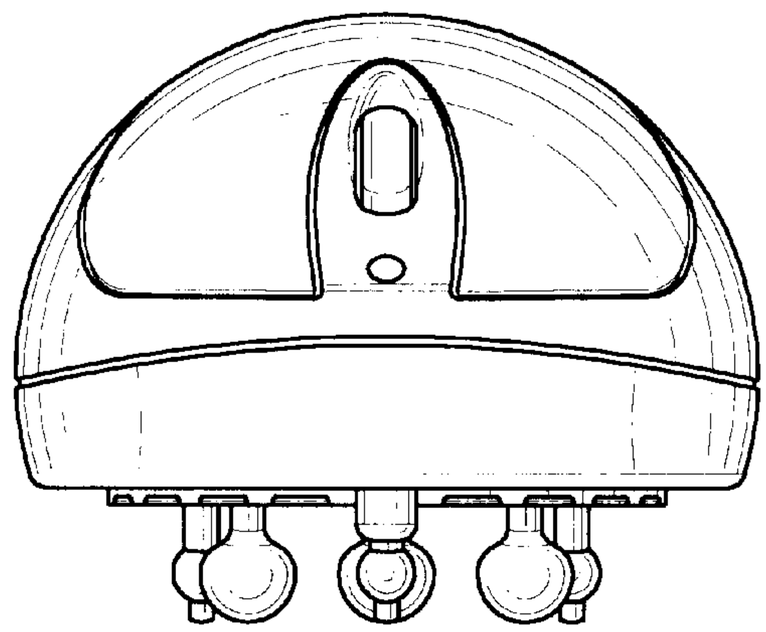

FIG. 2

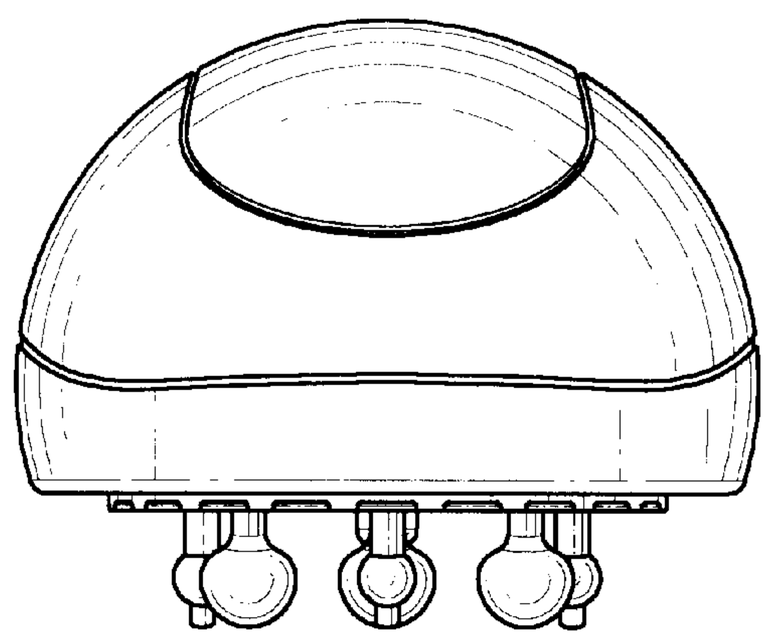

FIG. 3

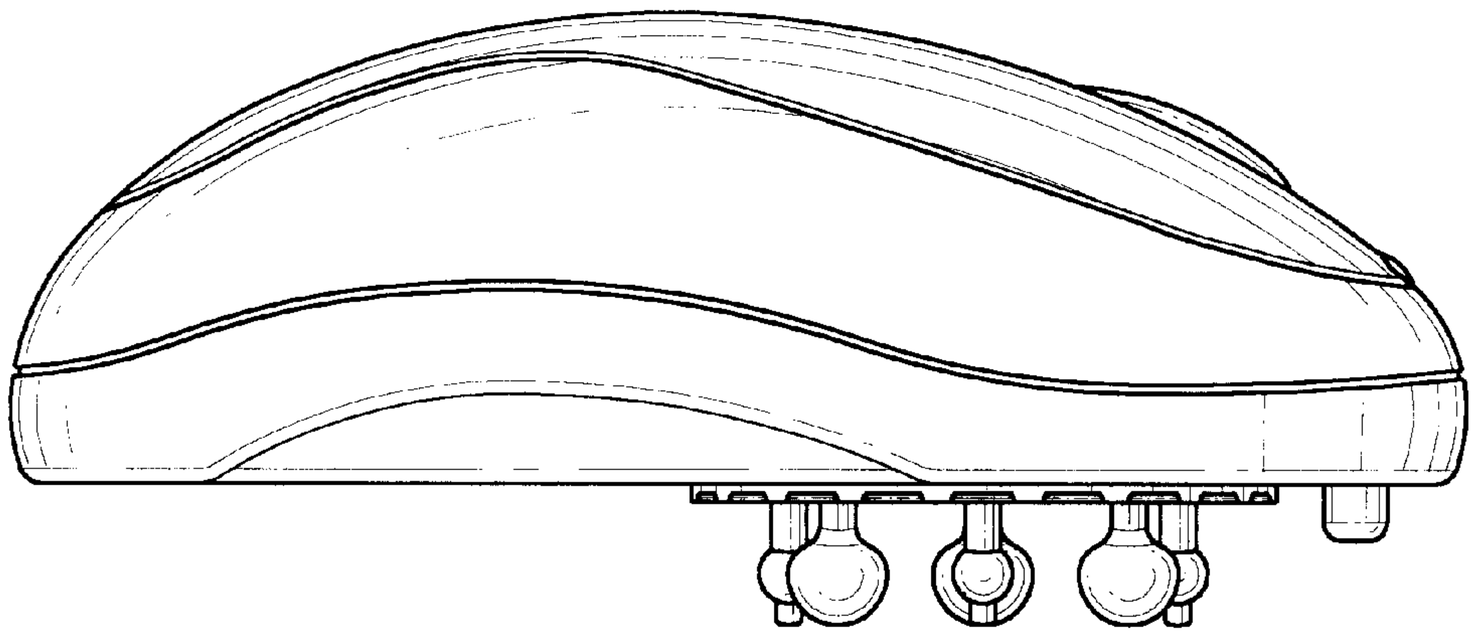

FIG. 4

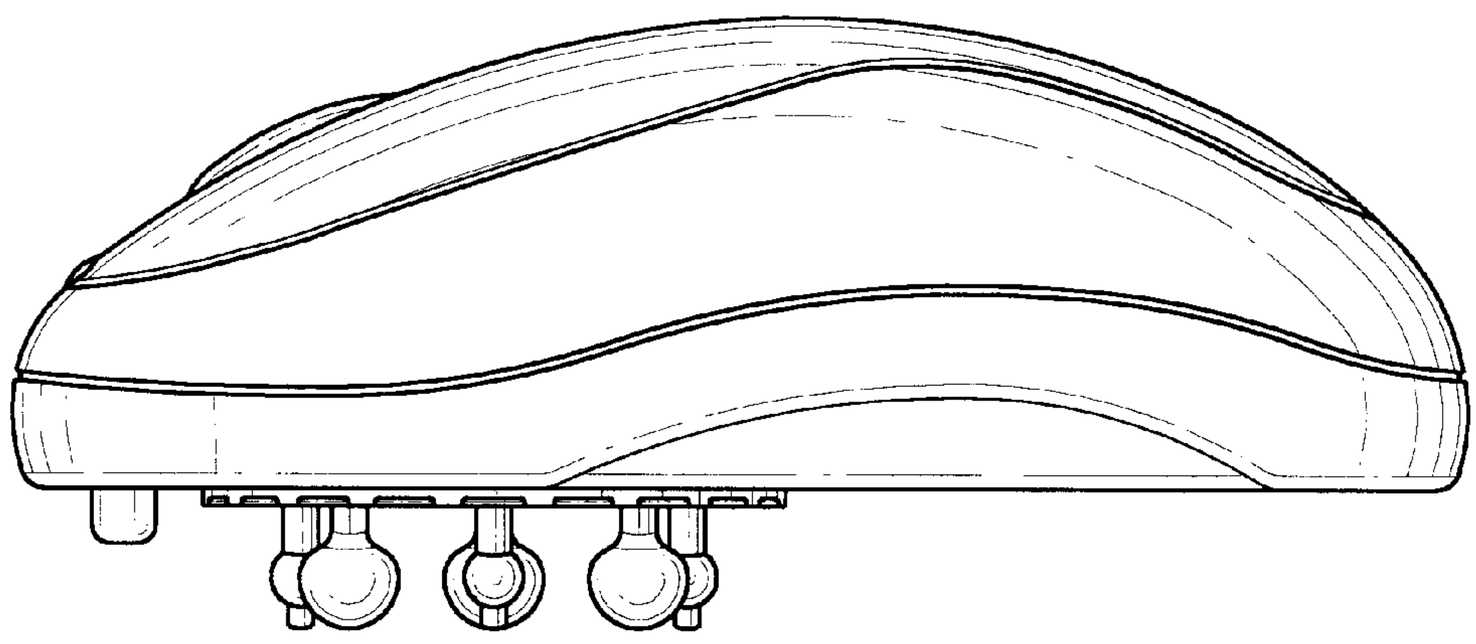

FIG. 5

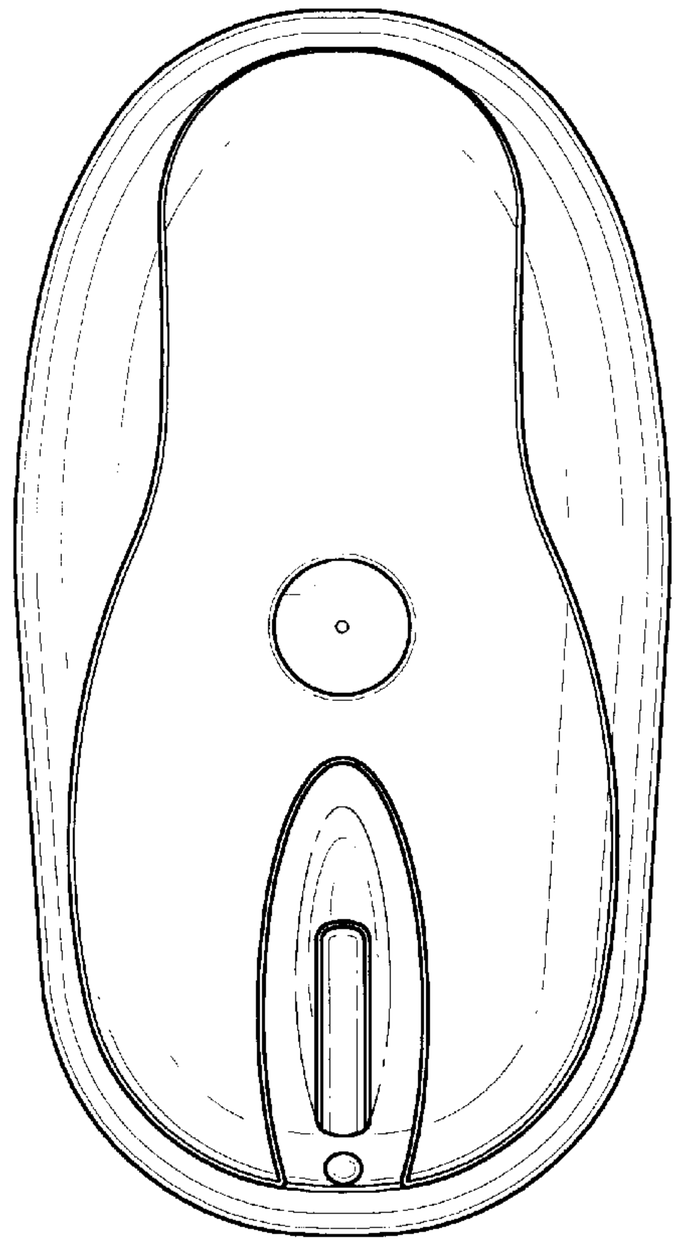

FIG. 6

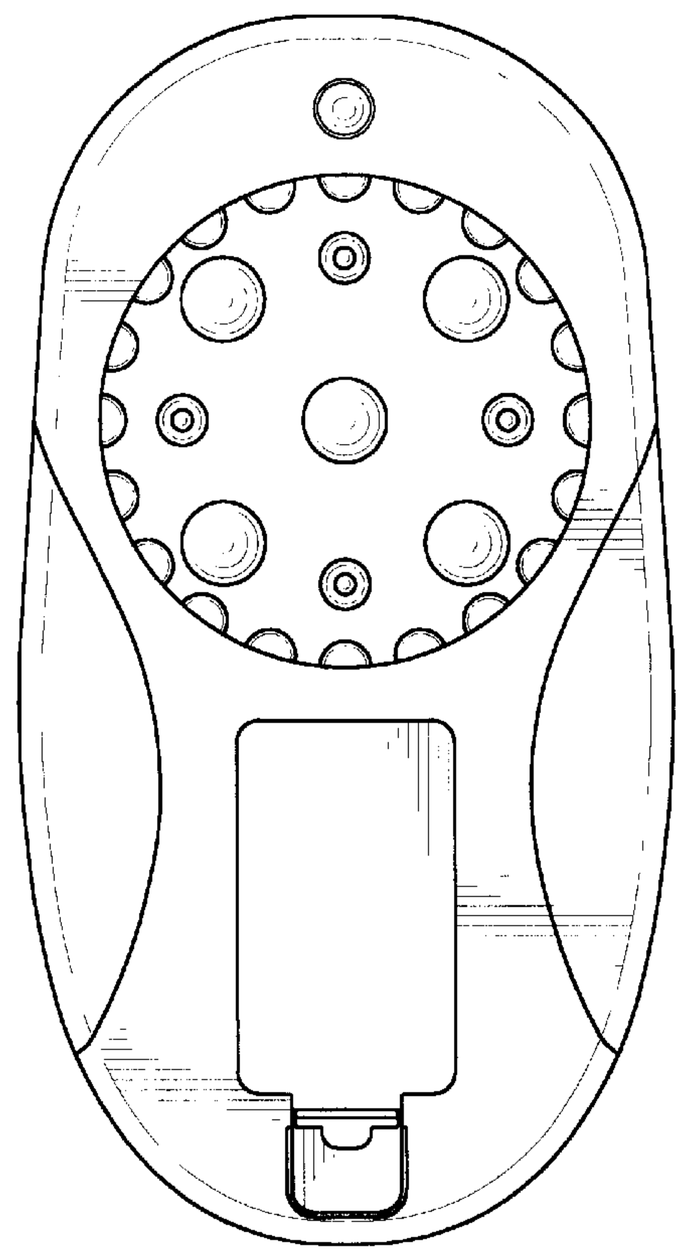

FIG. 7