US00D536119S

(12) United States Design Patent

Mier-Langner et al.

(10) Patent No.: US D536,119 S
(45) Date of Patent: ** Jan. 30, 2007

(54) **WALL WASH LUMINAIRE**

(75) Inventors: **Alejandro Mier-Langner**, Providence, RI (US); **James E. Kuchar**, Fall River, MA (US); **Andrew E. Medeiros**, Fall River, MA (US)

(73) Assignee: **Genlyte Thomas Group LLC**, Louisville, KY (US)

(**) Term: **14 Years**

(21) Appl. No.: **29/204,972**

(22) Filed: **May 6, 2004**

(51) **LOC (8) Cl.** **26-05**
(52) **U.S. Cl.** **D26/63**; D26/61
(58) **Field of Classification Search** D26/61, D26/63–66, 72; 362/147, 265, 277, 278, 362/281, 282, 285, 287, 288, 306, 404, 427, 362/640, 647, 648, 652, 653, 655
See application file for complete search history.

(56) **References Cited**

U.S. PATENT DOCUMENTS

2,740,885 A * 4/1956 Kruger 362/220
D319,702 S * 9/1991 Kane D26/63
D353,474 S * 12/1994 Shyan D26/63
D436,678 S * 1/2001 Mier-Langner et al. D26/63
D440,337 S * 4/2001 Fiorato D26/63
D445,936 S * 7/2001 Mier-Langner et al. D26/63
D453,227 S * 1/2002 Lin D26/63
D461,019 S * 7/2002 Donato D26/63
D479,015 S * 8/2003 Tang D26/63
2006/0039168 A1 * 2/2006 Mier-Langner et all. 362/648

* cited by examiner

Primary Examiner—Clare E Heflin
(74) *Attorney, Agent, or Firm*—John F. Salazar; Middleton Reutlinger

(57) **CLAIM**

The ornamental design for a wall wash luminaire, as shown and described.

DESCRIPTION

FIG. **1** is a perspective view of the design for our wall wash luminaire.
FIG. **2** is a front view of our design.
FIG. **3** is a right side view of our design.
FIG. **4** is a left side view of our design.
FIG. **5** is a rear view of our design.
FIG. **6** is top view of our design; and,
FIG. **7** is a bottom view of our design.
The broken line showing environmental structure is for illustrative purposes only and forms no part of the claimed design.

1 Claim, 7 Drawing Sheets

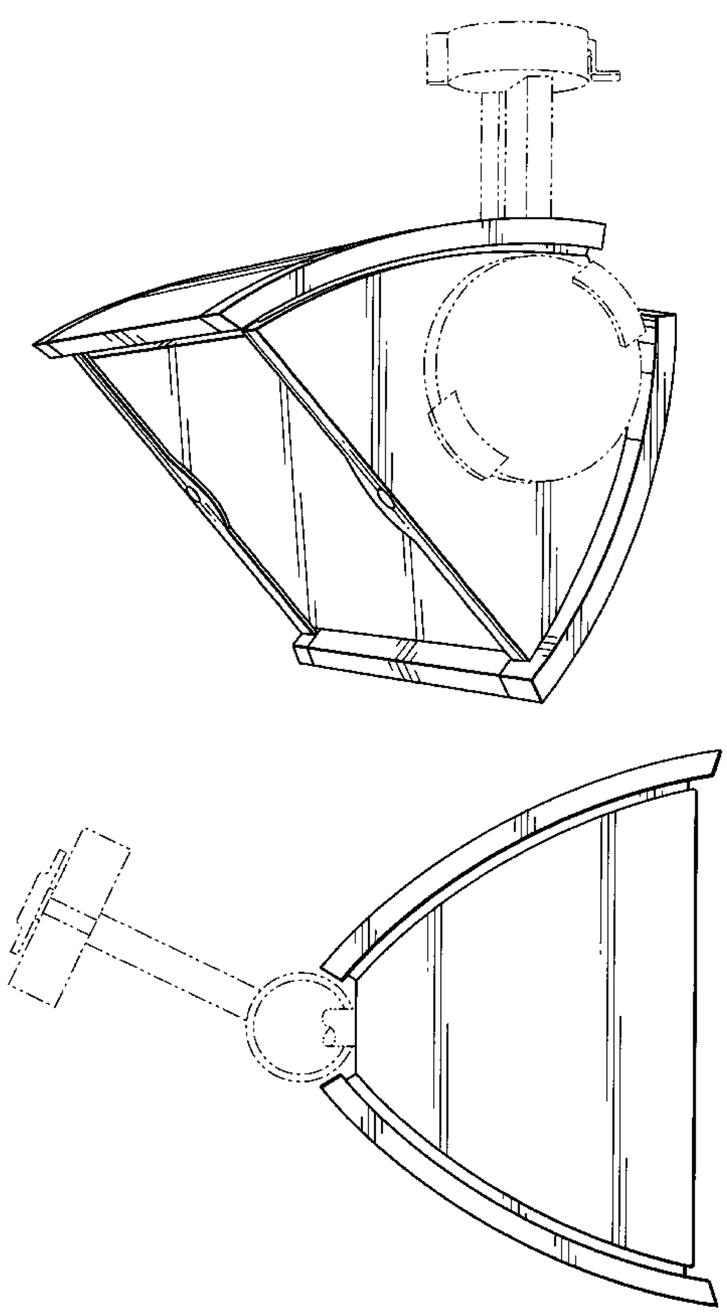

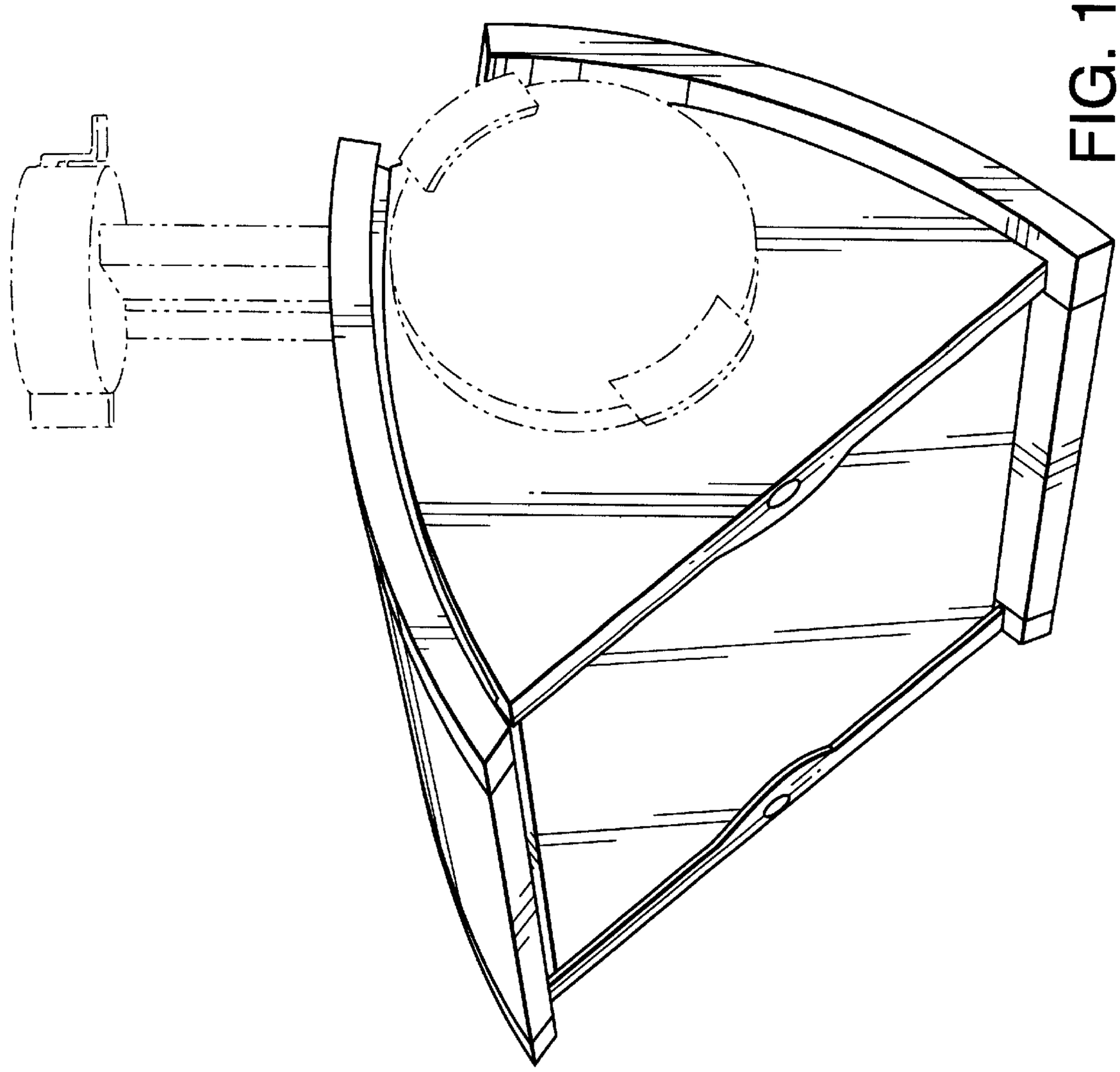

FIG. 1

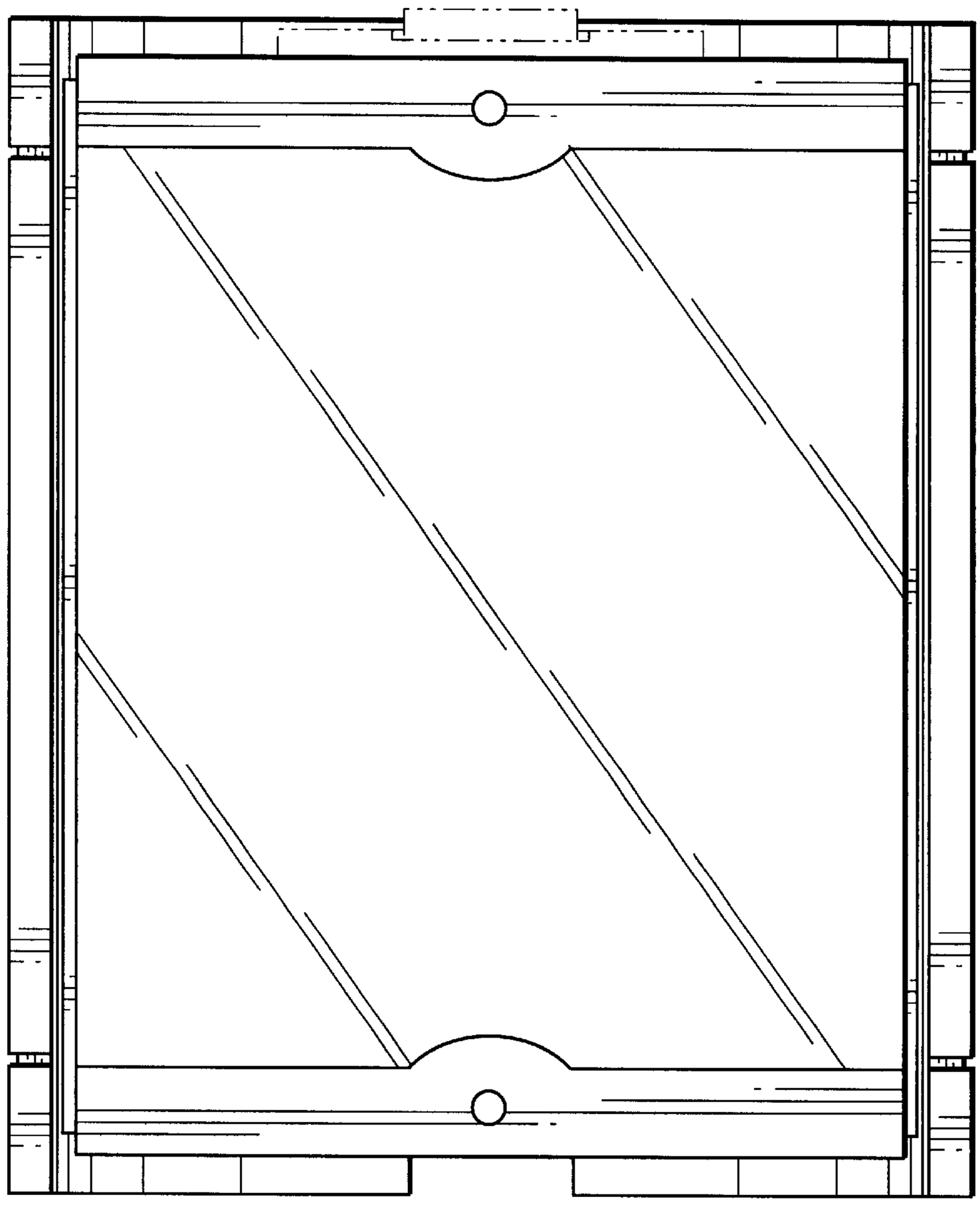

FIG. 2

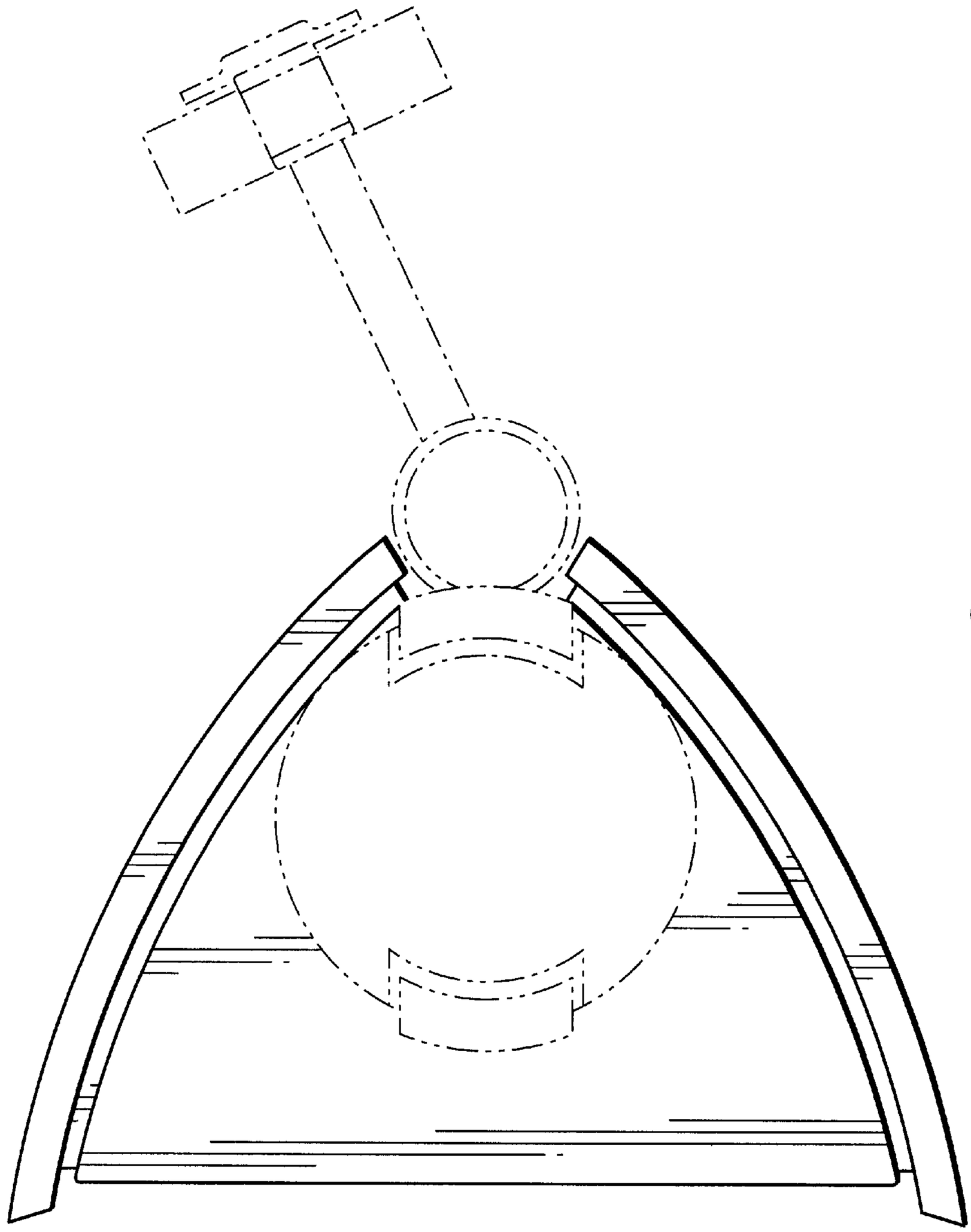

FIG. 3

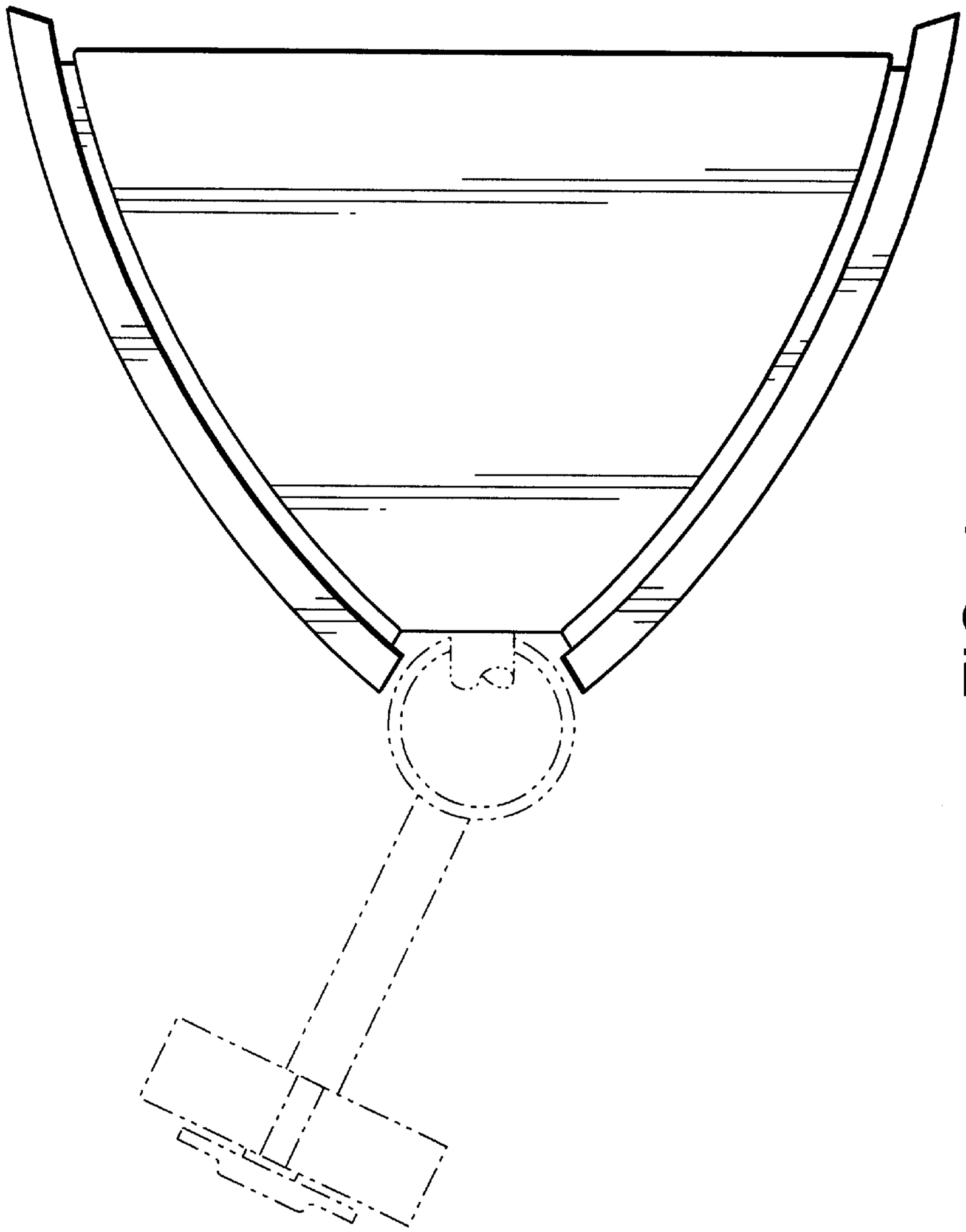

FIG. 4

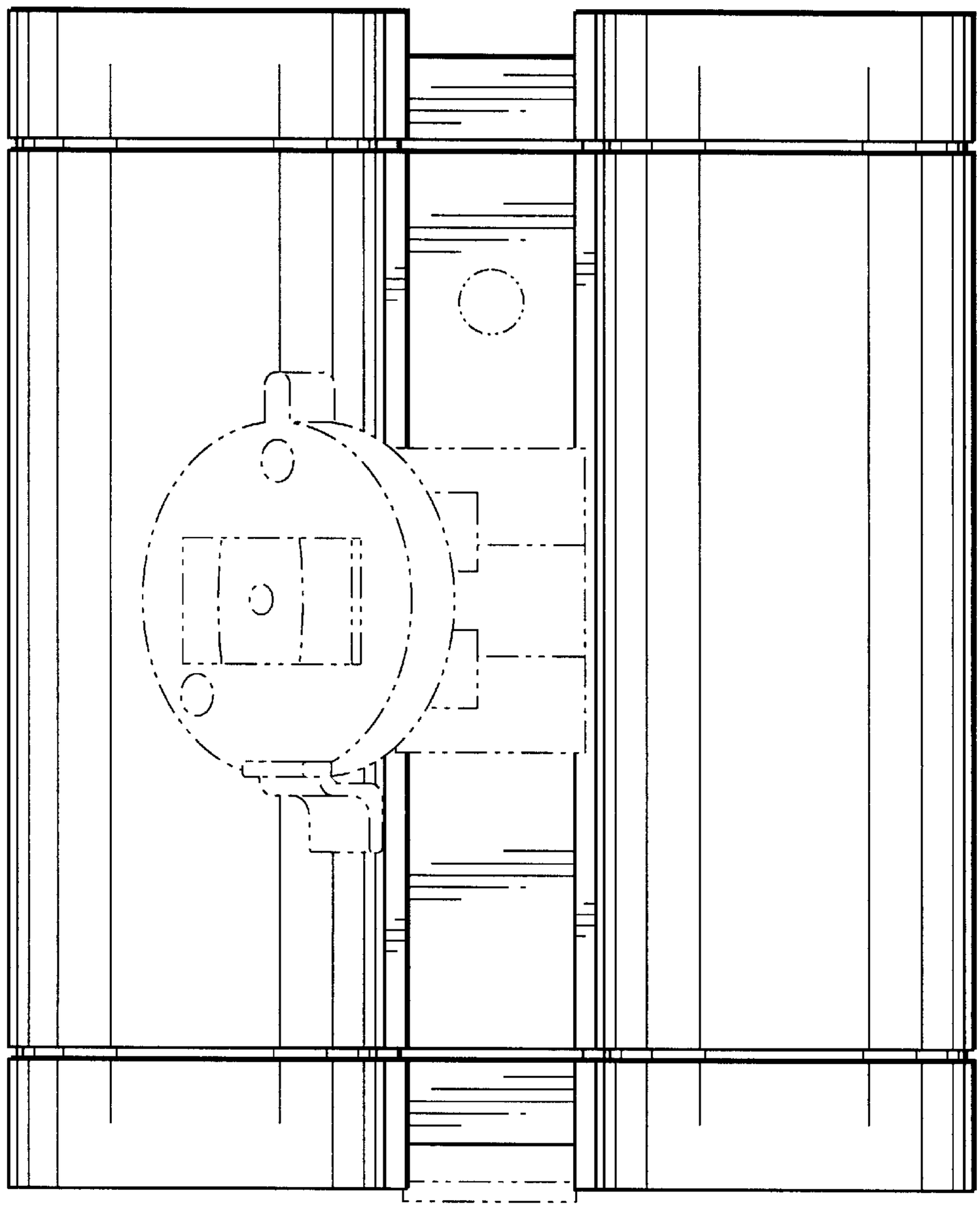

FIG. 5

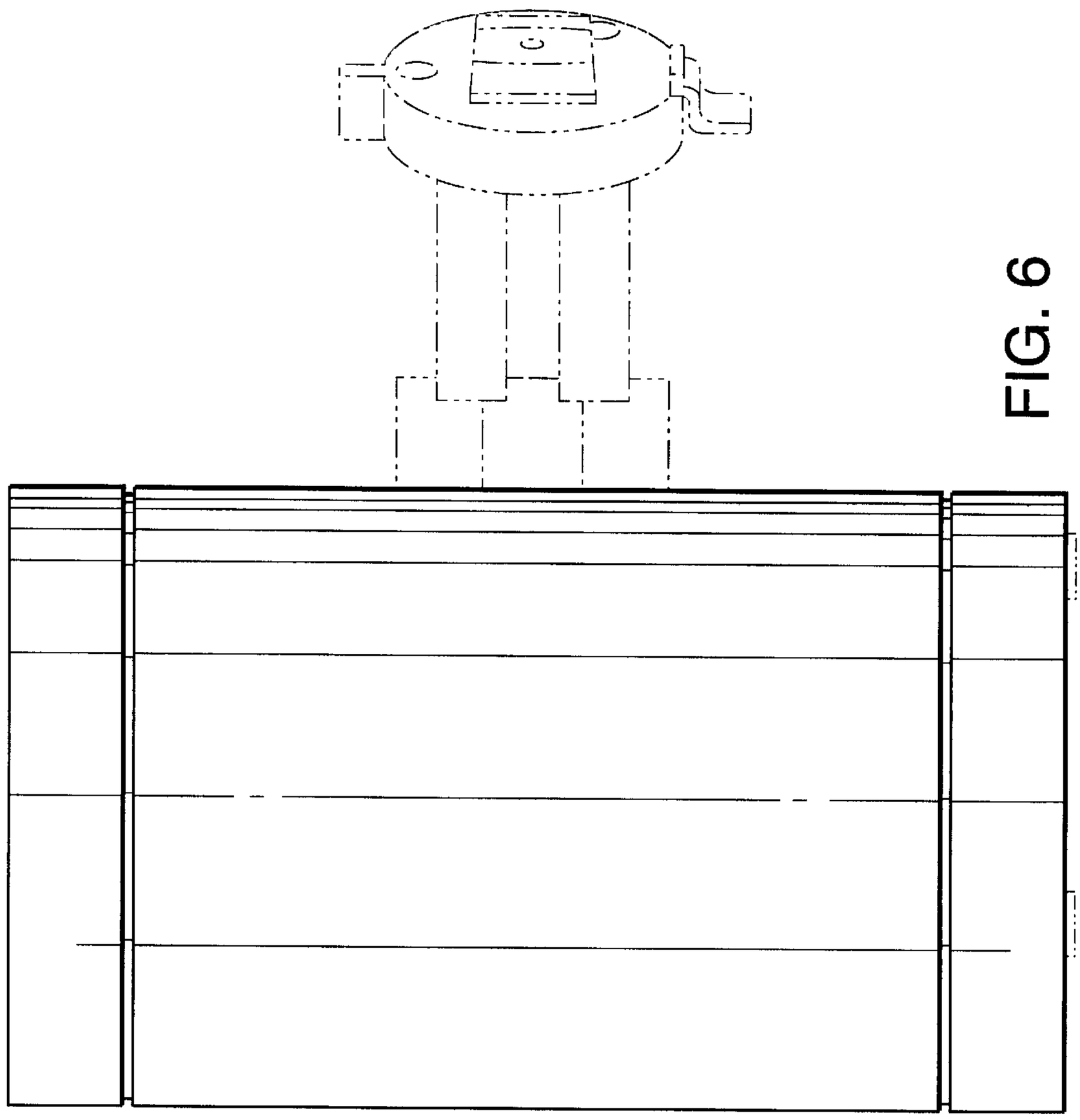

FIG. 6

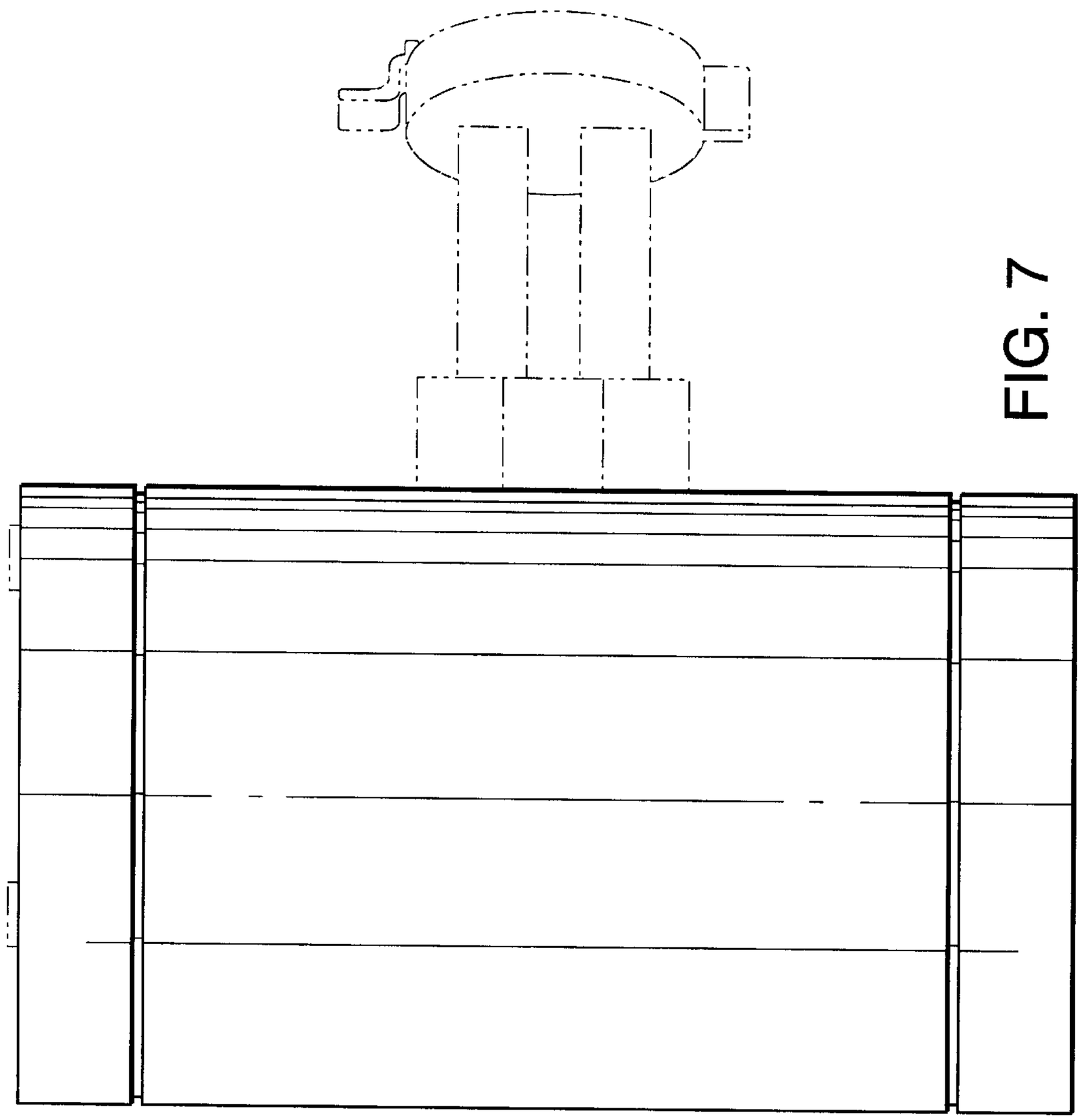

FIG. 7