US00D533091S

(12) United States Design Patent

Garrett et al.

(10) Patent No.: US D533,091 S
(45) Date of Patent: ** Dec. 5, 2006

(54) **HEATING, VENTILATING AND AIR CONDITIONING CONTROLLER**

(75) Inventors: **Carl L. Garrett**, Bullard, TX (US); **Nathan P. Parker**, Flint, TX (US); **Robert W. Helt**, Tyler, TX (US); **Timothy W. Storm**, Tyler, TX (US); **Dale C. Cotton**, Franklin, TN (US); **Amy N. Sorensen**, Clarksville, TN (US); **Randy S. Amborn**, White Bear Lake, MN (US)

(73) Assignee: **American Standard International Inc.**, New York, NY (US)

(**) Term: **14 Years**

(21) Appl. No.: **29/224,573**

(22) Filed: **Mar. 3, 2005**

(51) **LOC (8) Cl.** **10-04**
(52) **U.S. Cl.** **D10/50**; D10/49
(58) **Field of Classification Search** ..... D10/49–50; 62/180; 236/1 C, 11, 46 R, 47, 49.3, 51, 236/84, 94; 400/485
See application file for complete search history.

(56) **References Cited**

U.S. PATENT DOCUMENTS

D457,820 S 5/2002 Amborn et al.
D457,821 S 5/2002 Amborn et al.
D458,159 S 6/2002 Amborn et al.
D460,699 S 7/2002 Amborn et al.
D460,922 S 7/2002 Amborn et al.
D470,114 S 2/2003 Amborn et al.
D471,161 S 3/2003 Amborn et al.

Primary Examiner—Antoine D. Davis
(74) *Attorney, Agent, or Firm*—William J. Beres; William O'Driscoll

(57) **CLAIM**

The ornamental design for a heating, ventilating and air conditioning controller, as shown and described.

DESCRIPTION

FIG. **1** is a perspective view of the heating, ventilating and air conditioning controller showing our new design;

FIG. **2** is a front view thereof;

FIG. **3** is a left side view thereof;

FIG. **4** is a right side view thereof;

FIG. **5** is a top view thereof; and,

FIG. **6** is a bottom view thereof.

1 Claim, 2 Drawing Sheets

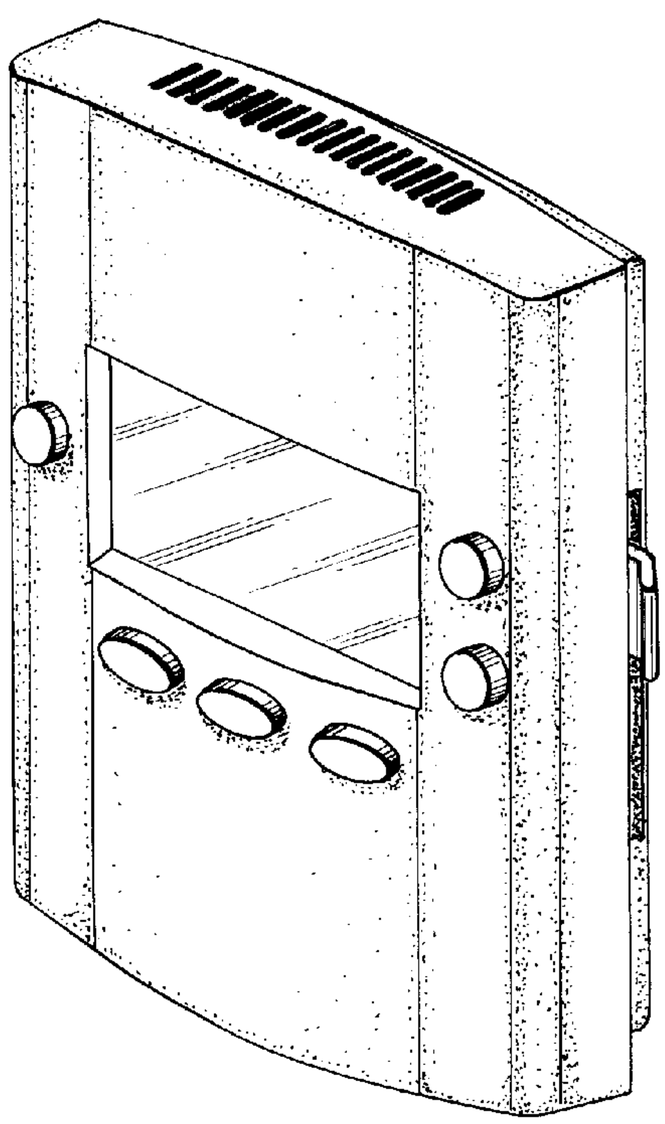

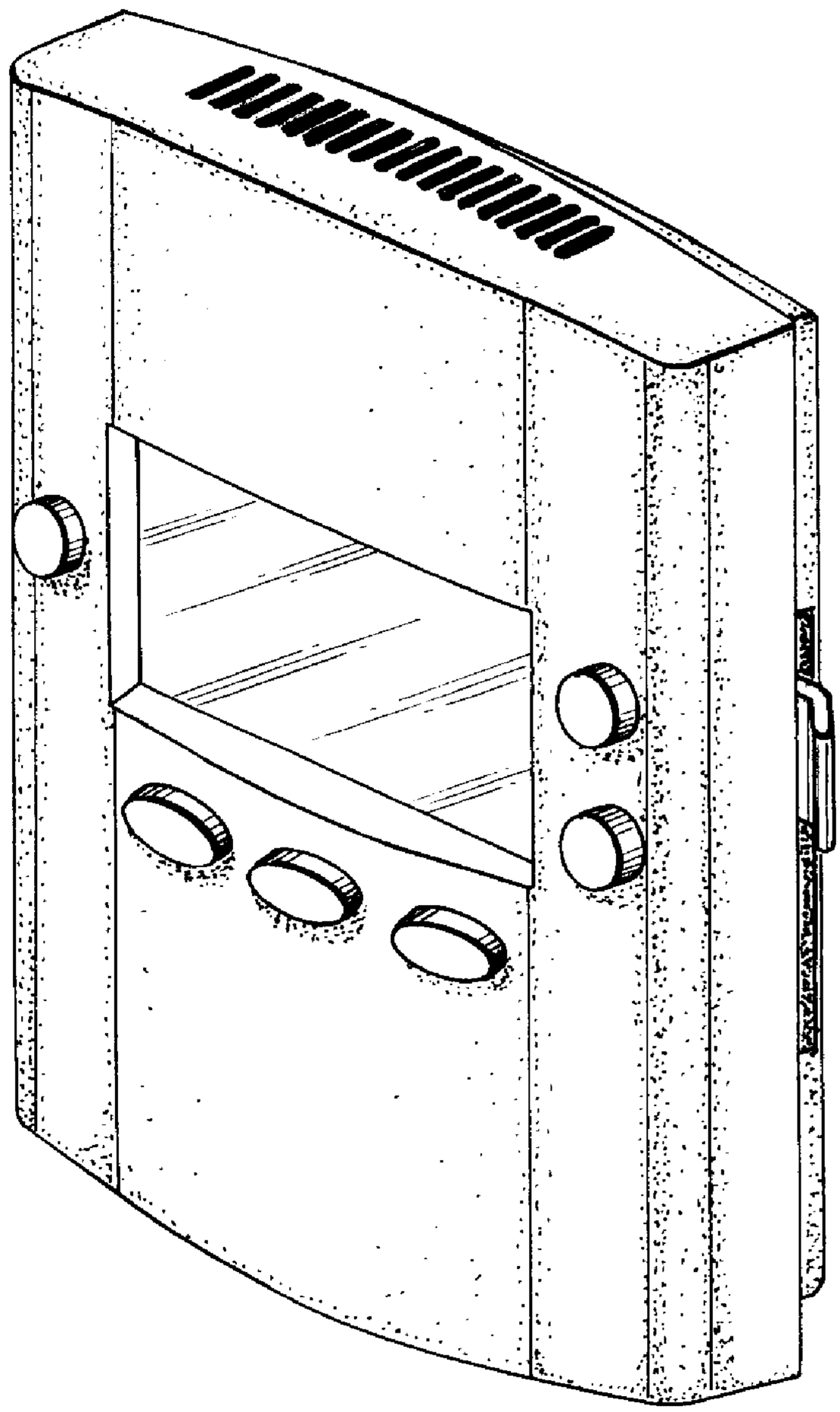

FIG. 1

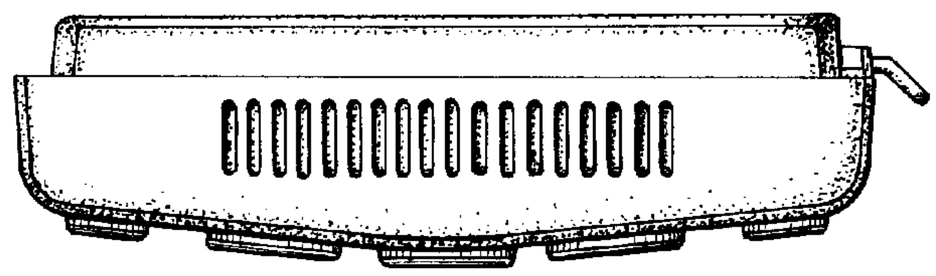

FIG. 5

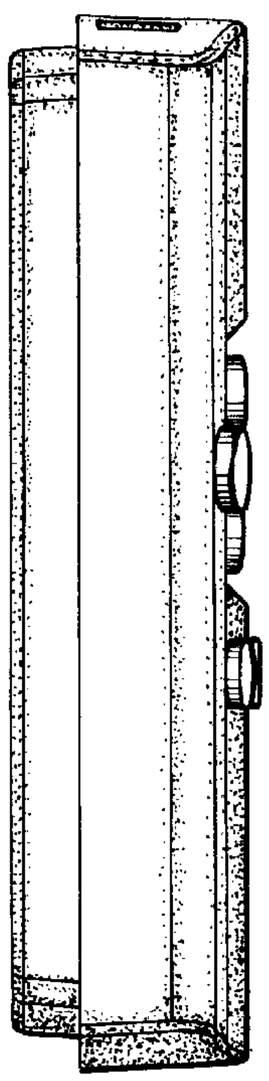

FIG. 3

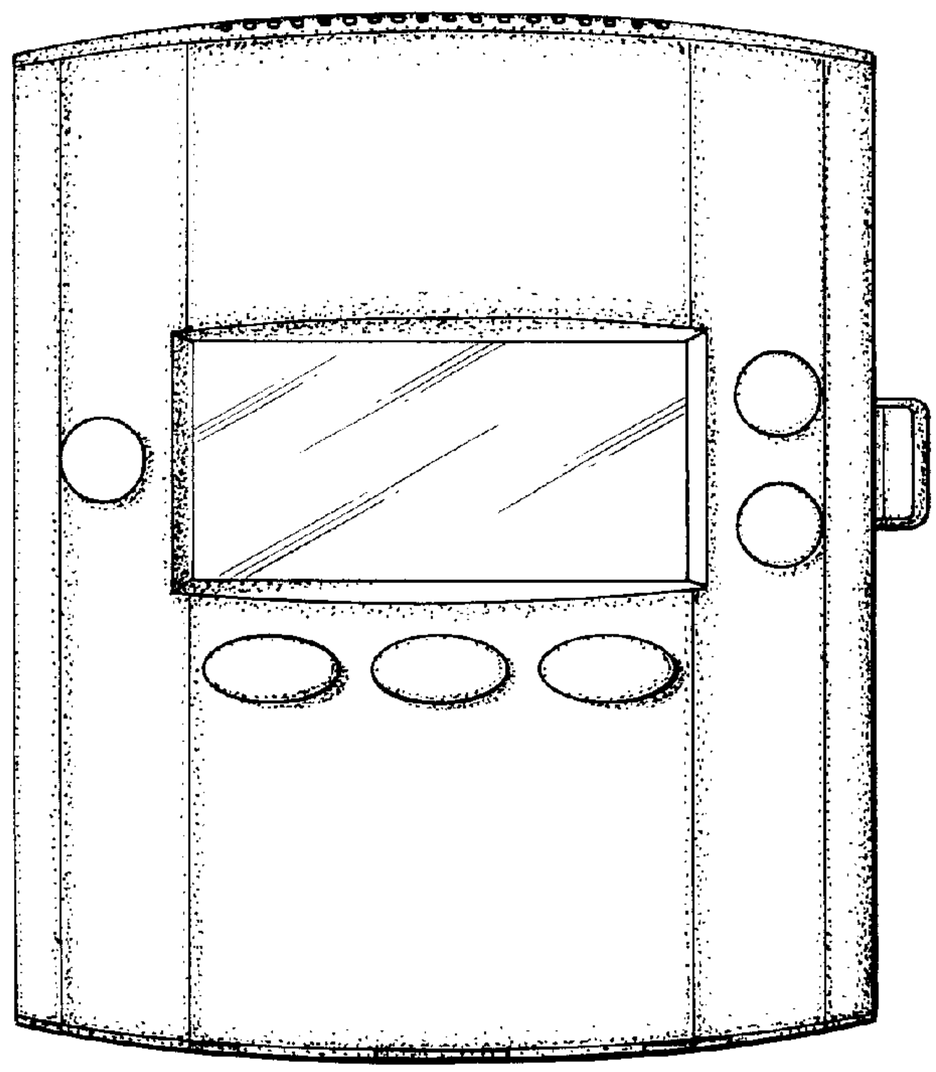

FIG. 2

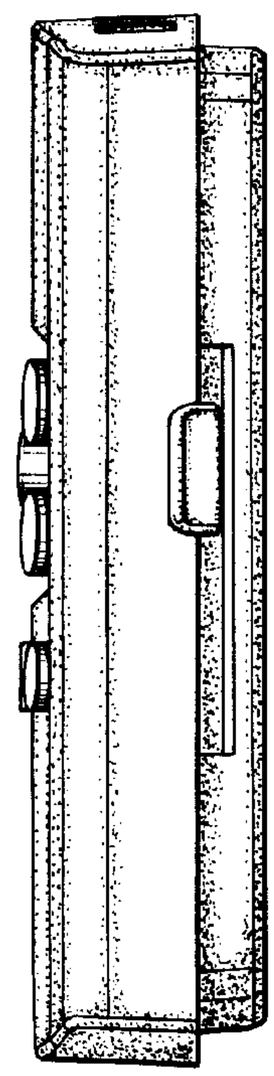

FIG. 4

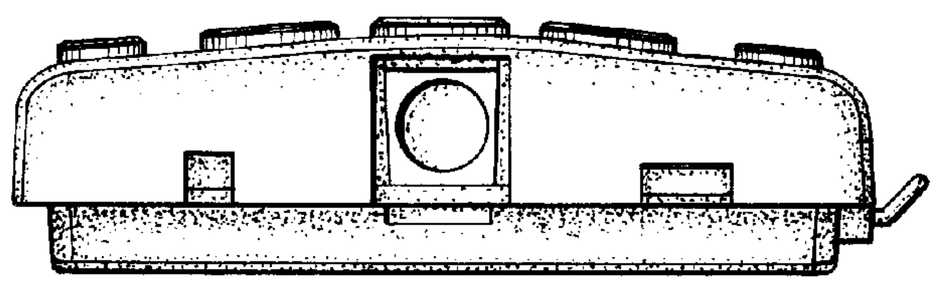

FIG. 6