US00D529932S

(12) United States Design Patent

Yamashita et al.

(10) Patent No.: US D529,932 S
(45) Date of Patent: ** Oct. 10, 2006

(54) **TRACTOR**

(75) Inventors: **Masaaki Yamashita**, Osaka (JP); **Kunihiko Sakamoto**, Osaka (JP); **Hiroaki Ayabe**, Osaka (JP); **Seiji Sakada**, Fukuoka (JP); **Makiko Tajima**, Osaka (JP)

(73) Assignee: **Yanmar Co., LTD**, Osaka (JP)

(**) Term: **14 Years**

(21) Appl. No.: **29/219,048**

(22) Filed: **Dec. 9, 2004**

(30) **Foreign Application Priority Data**

Sep. 3, 2004 (JP) 2004-026761

(51) **LOC (8) Cl.** **12-09**
(52) **U.S. Cl.** **D15/25**
(58) **Field of Classification Search** D15/10, D15/22–26, 33; D21/431; 37/403, 409, 442, 37/443; 180/89.1, 89.12, 89.13; 296/190.03; 414/685, 694, 722, 724
See application file for complete search history.

(56) **References Cited**

U.S. PATENT DOCUMENTS

4,182,456 A * 1/1980 Paul 414/685
D256,017 S 7/1980 Emundts et al.
D274,524 S 7/1984 Koval et al.
4,508,756 A 3/1985 Bergous
D329,435 S * 9/1992 Katoh et al. D15/23
5,265,995 A * 11/1993 Beck 414/694
D387,068 S 12/1997 Kato et al.
D391,581 S * 3/1998 Kato et al. D15/23
D406,151 S * 2/1999 Cunningham et al. D15/25
5,873,612 A * 2/1999 Connor 292/338
D416,266 S * 11/1999 Del Torchio D15/25
D431,575 S * 10/2000 Park D15/25
D440,234 S 4/2001 Katoh et al.
D498,245 S * 11/2004 Kuwae et al. D15/23

* cited by examiner

Primary Examiner—Stella Reid
Assistant Examiner—Mark Goodwin
(74) *Attorney, Agent, or Firm*—Sheridan Ross P.C.

(57) **CLAIM**

The ornamental design for a tractor, as shown and described.

DESCRIPTION

FIG. **1** is a front perspective view of a tractor showing our new design;
FIG. **2** is a rear perspective view thereof;
FIG. **3** is a left side view thereof;
FIG. **4** is a right side view thereof;
FIG. **5** is a top plan view thereof;
FIG. **6** is a bottom plan view thereof;
FIG. **7** is a front view thereof; and,
FIG. **8** is a rear view thereof.

1 Claim, 4 Drawing Sheets

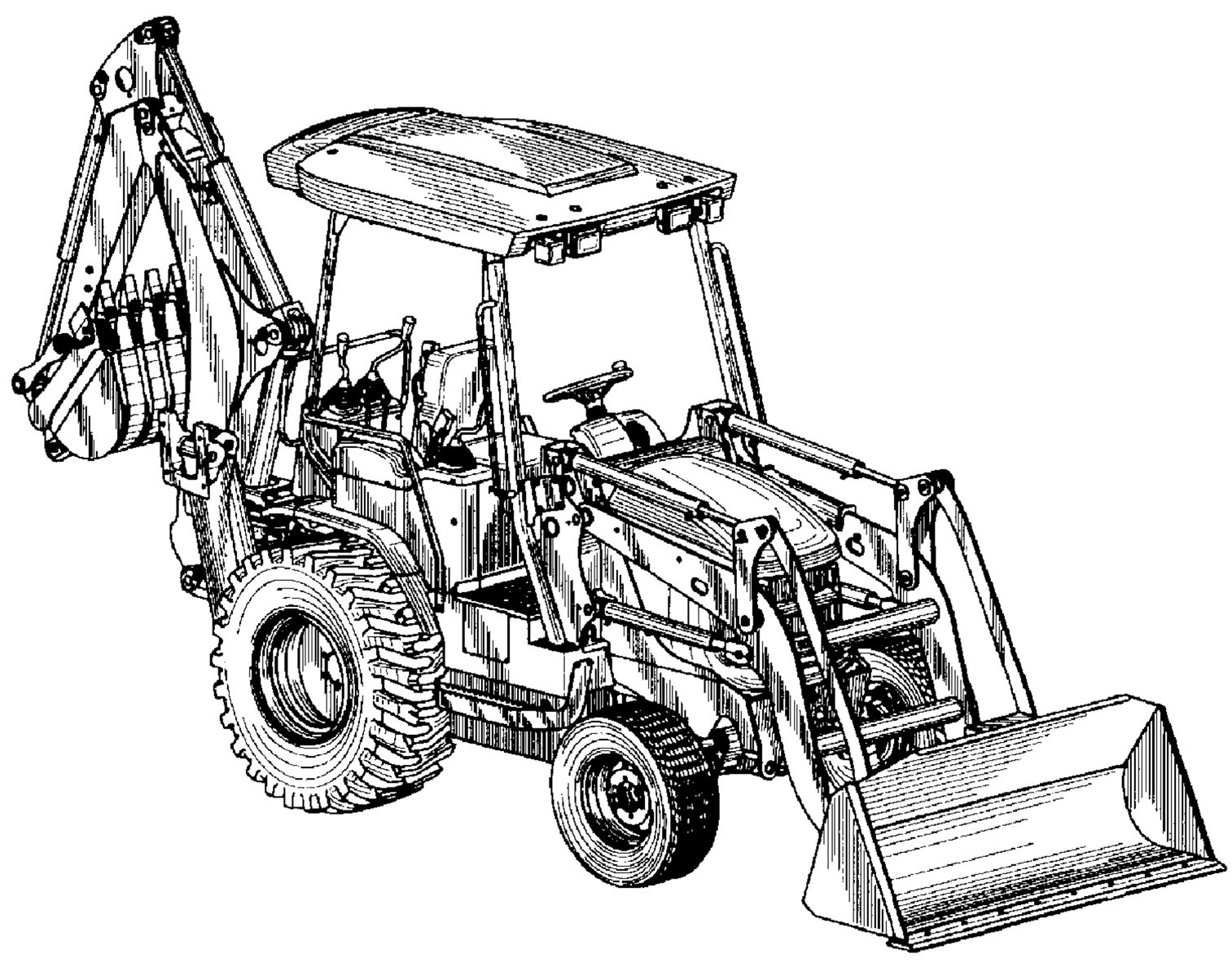

FIG. 1

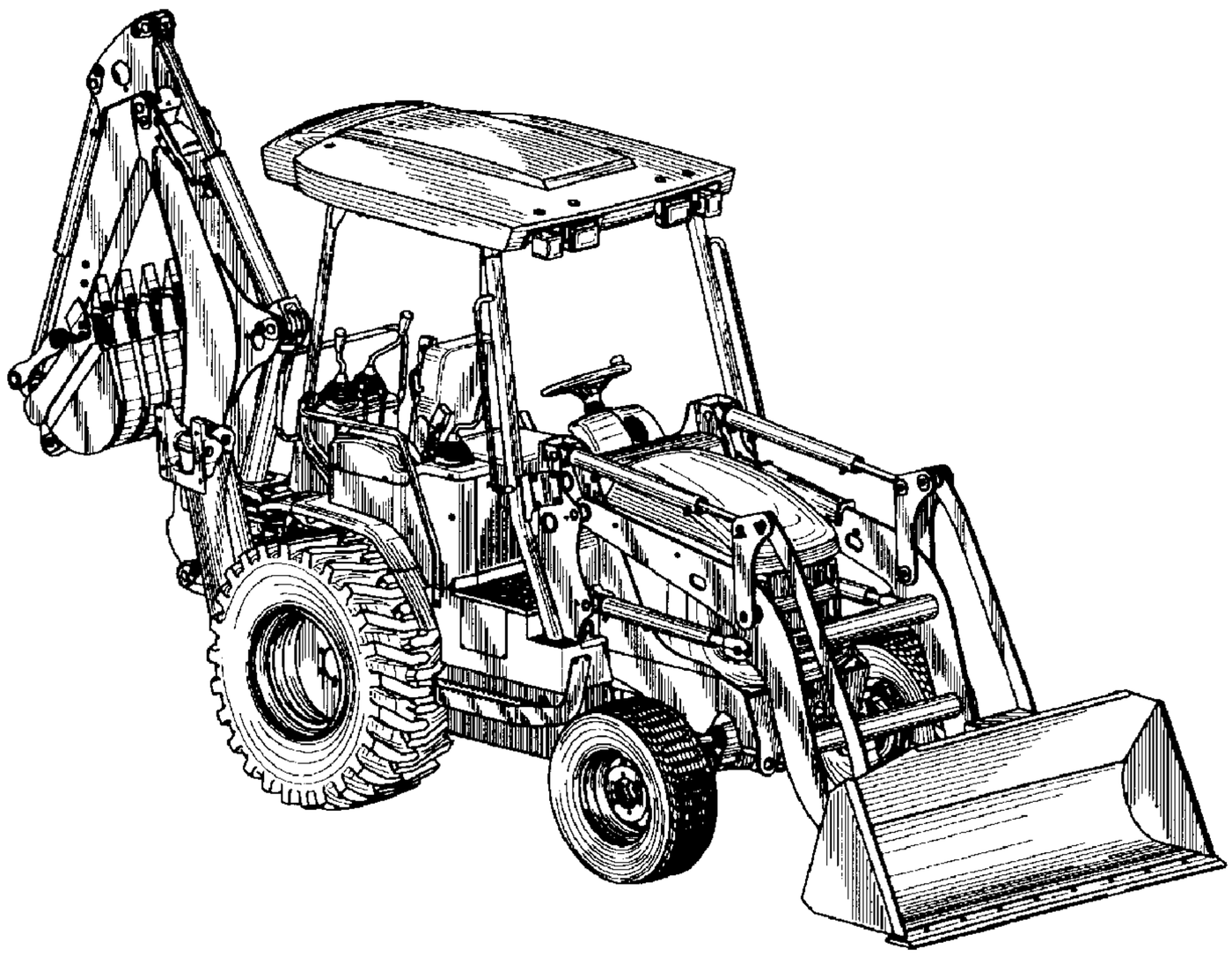

FIG. 2

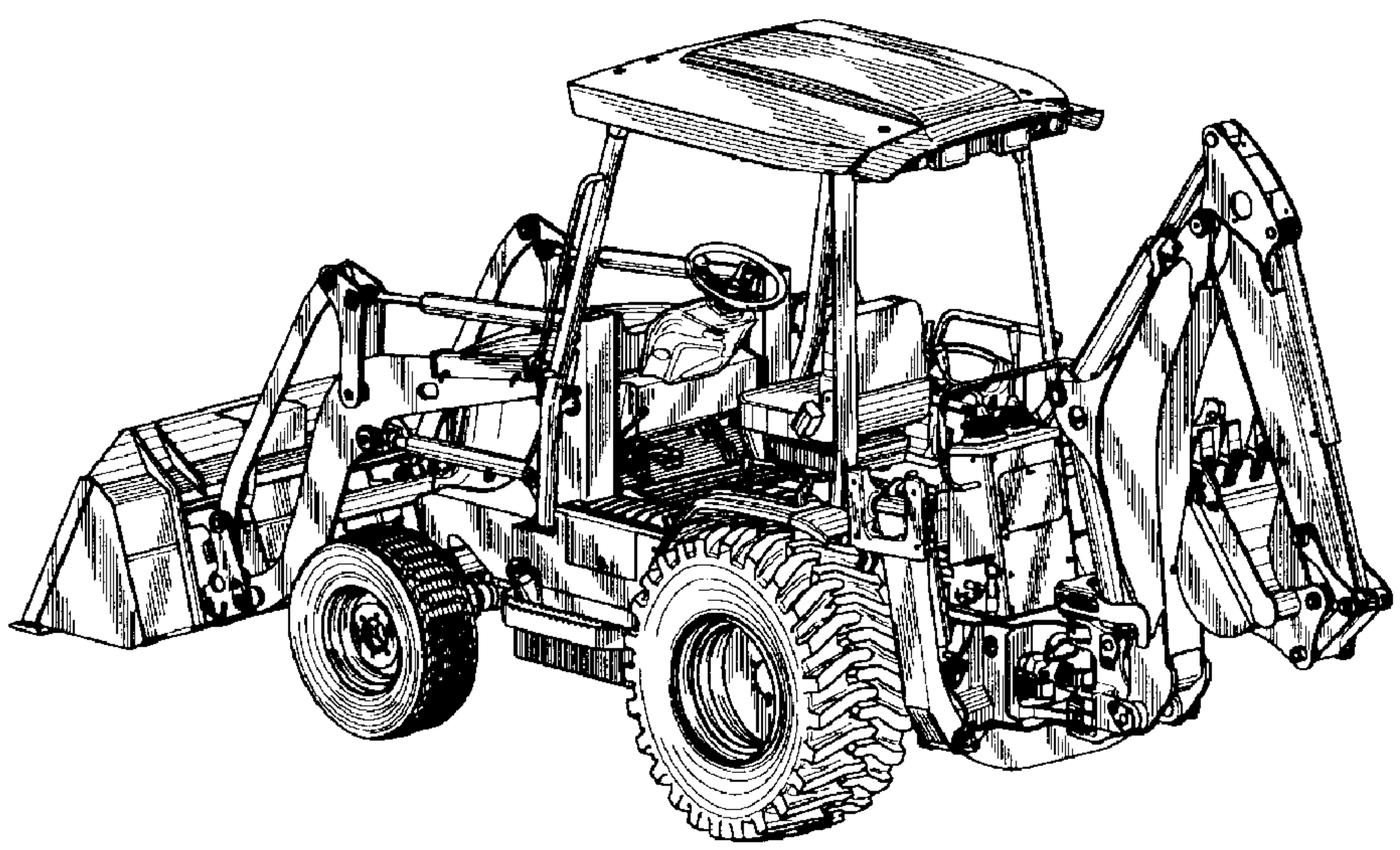

FIG. 3

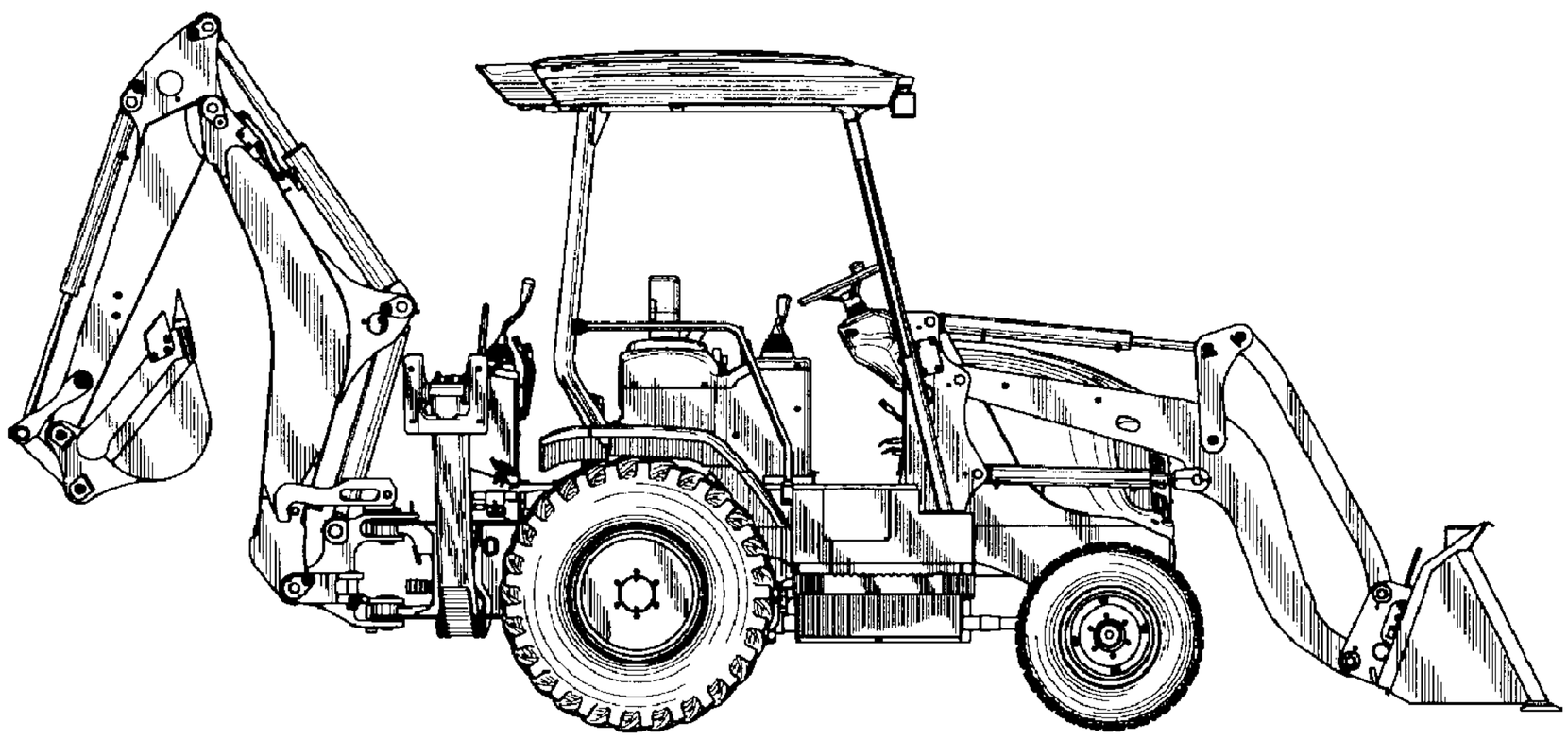

FIG. 4

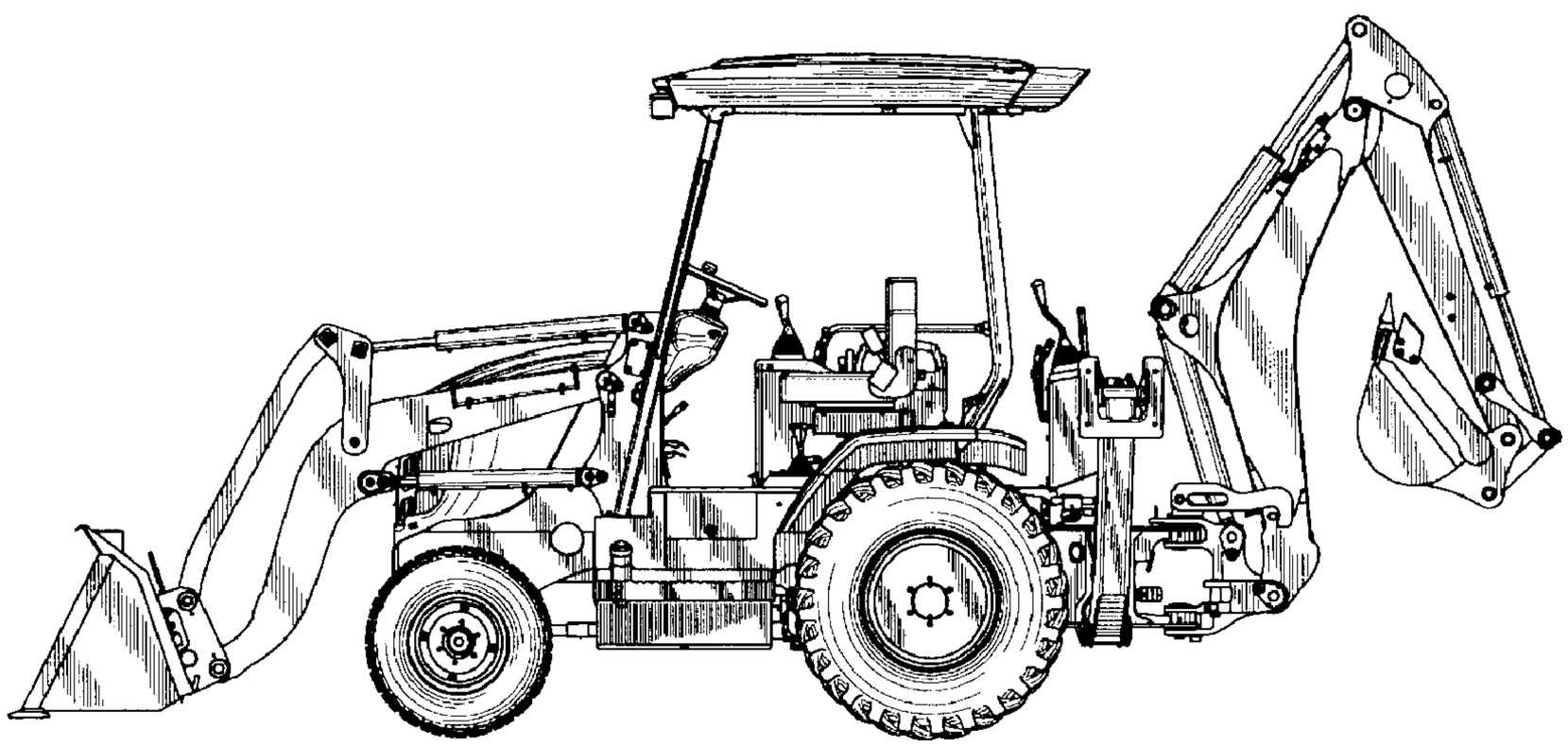

FIG. 5

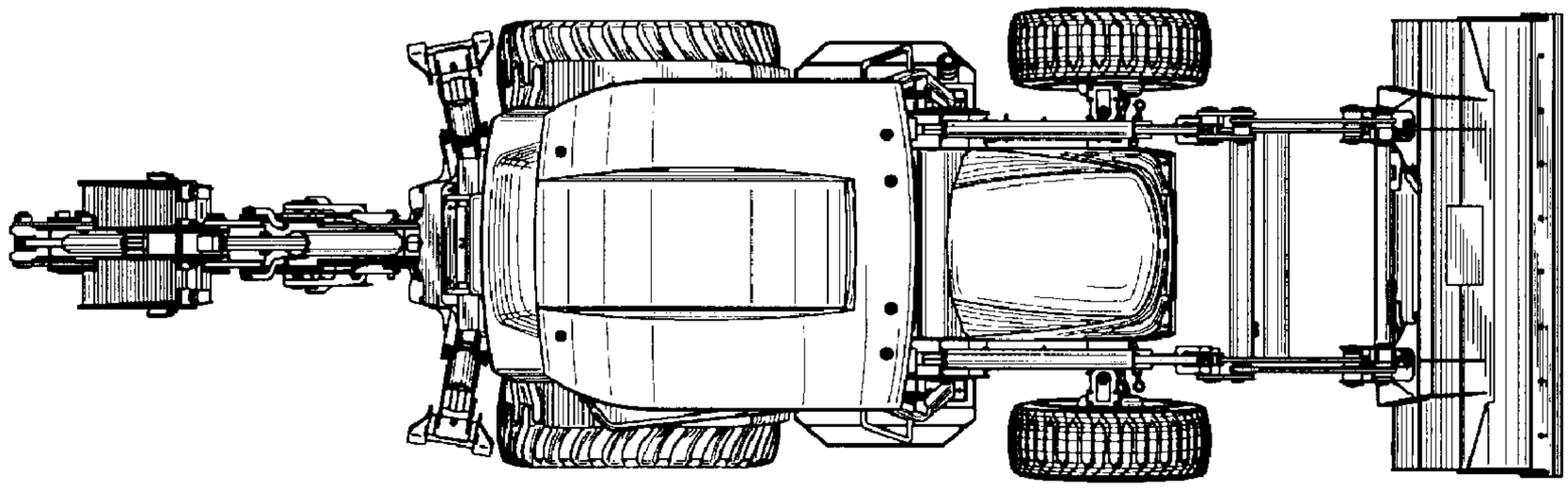

FIG. 6

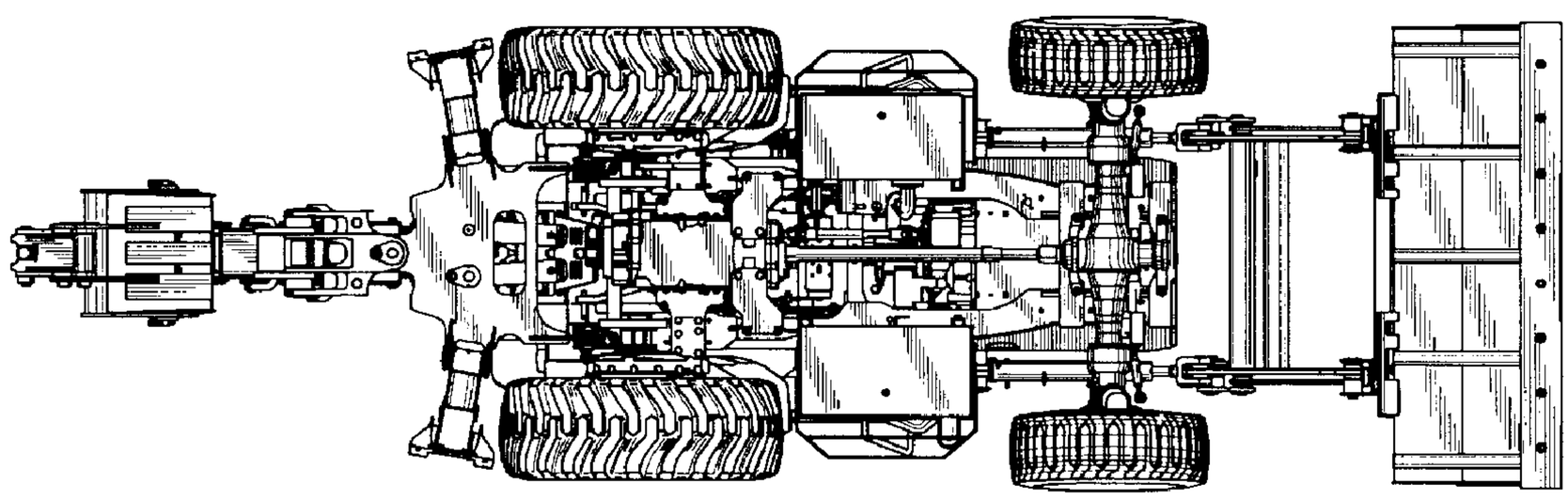

FIG. 7

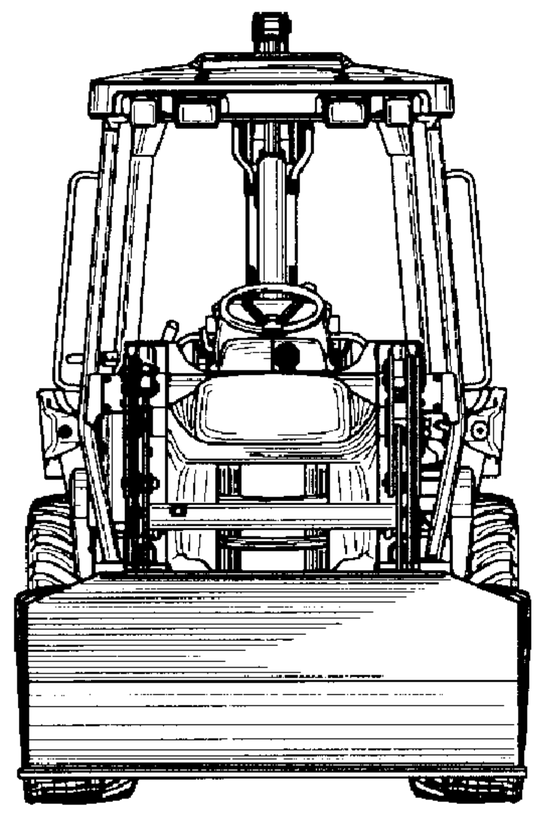
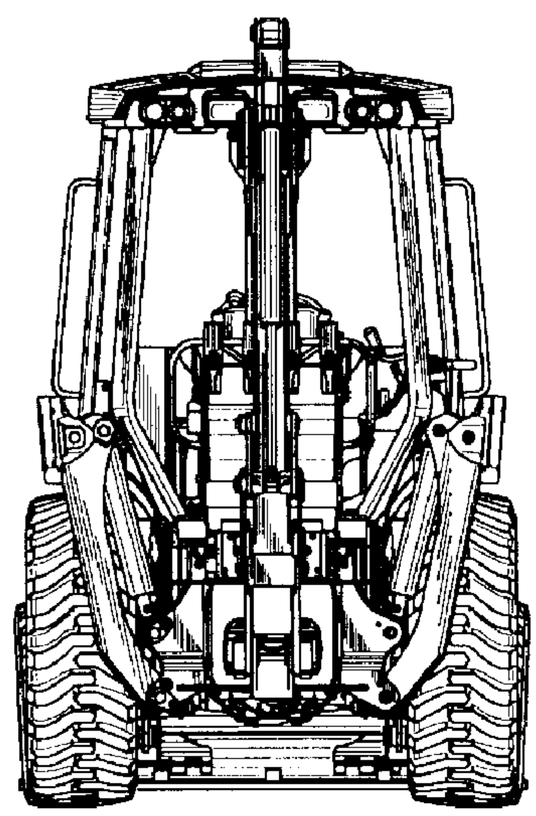
FIG. 8