US00D529506S

(12) United States Design Patent

McLees et al.

(10) Patent No.: US D529,506 S
(45) Date of Patent: ** Oct. 3, 2006

(54) **IMAGE FOR A PORTION OF A DISPLAY SCREEN**

(75) Inventors: **Lorraine McLees**, Issaquah, WA (US); **Brian Jarrard**, Bellevue, WA (US); **Claire Anna Jennings**, Kirkland, WA (US); **Zoe Brawley**, Redmond, WA (US)

(73) Assignee: **Microsoft Corporation**, Redmond, WA (US)

(**) Term: **14 Years**

(21) Appl. No.: **29/227,357**

(22) Filed: **Apr. 11, 2005**

(51) **LOC (8) Cl.** **14-04**
(52) **U.S. Cl.** **D14/485**
(58) **Field of Classification Search** 715/500.1, 715/501.1, 526, 530–31, 539, 708, 711, 717, 715/723, 726, 733, 738, 753, 762, 763–4, 715/767–69, 778–82, 788, 790, 793–94, 715/797–8, 802–10, 835–40, 848–856, 862–63, 715/976, 978; 345/757, 782, 848, 852, 850, 345/809, 837, 798, 752, 163, 156, 537, 474, 345/836, 419, 649, 656, 659, 426, 427, 582, 345/428, 440, 660, 634, 902, 418, 629; D14/485–94; D18/24–33; D20/40, 11; D19/6; D21/324–33; 434/43, 38; 382/305; 400/76; 710/5, 73; 707/102, 707/2; 463/32, 16, 33; 717/170; 705/26, 27
See application file for complete search history.

(56) **References Cited**

U.S. PATENT DOCUMENTS

5,321,423	A	*	6/1994	Yoshizawa et al.	715/526
5,392,388	A	*	2/1995	Gibson	715/837
5,548,705	A	*	8/1996	Moran et al.	715/863
D389,133	S	*	1/1998	Wimmer et al.	D14/486
5,727,174	A	*	3/1998	Aparicio et al.	715/837
5,784,061	A	*	7/1998	Moran et al.	715/863
5,821,935	A	*	10/1998	Hartman et al.	715/839
D416,550	S	*	11/1999	Richter	D14/489
6,157,384	A	*	12/2000	Oka et al.	715/848
D439,584	S	*	3/2001	Wang et al.	D14/486
6,236,399	B1	*	5/2001	Nishiyama et al.	715/810
D452,692	S	*	1/2002	Fukuda	D14/489
6,366,299	B1	*	4/2002	Lanning et al.	715/738
D461,822	S	*	8/2002	Okuley	D14/489
D468,322	S	*	1/2003	Walker et al.	D14/486
D474,195	S	*	5/2003	Kates et al.	D14/485
D482,368	S	*	11/2003	den Toonder et al.	D14/486
D486,834	S	*	2/2004	Allen et al.	D14/486
7,013,427	B1	*	3/2006	Griffith	715/530
2001/0012021	A1	*	8/2001	Nishiyama et al.	345/763
2002/0015063	A1	*	2/2002	Kopitzke et al.	345/810
2002/0097277	A1	*	7/2002	Pitroda	345/854
2003/0001907	A1	*	1/2003	Bergsten et al.	345/853
2003/0103079	A1	*	6/2003	Adatia et al.	345/762
2003/0132966	A1	*	7/2003	Simas et al.	345/764
2003/0179228	A1	*	9/2003	Schreiber et al.	345/738
2003/0231208	A1	*	12/2003	Hanon et al.	345/764
2004/0008229	A1	*	1/2004	Hultcrantz	345/810
2004/0046795	A1	*	3/2004	Josephson et al.	345/764

* cited by examiner

Primary Examiner—M. H. Tung
Assistant Examiner—Susan Moon Lee
(74) *Attorney, Agent, or Firm*—Banner & Witcoff, Ltd.

(57) **CLAIM**

The ornamental design for an image for a portion of a display screen, as shown and described.

DESCRIPTION

The FIGURE is a front view of an image for a portion of a display screen showing our new design.
The broken line showings of the circular region and the display screen are for illustrative purposes only and form no part of the claimed design.
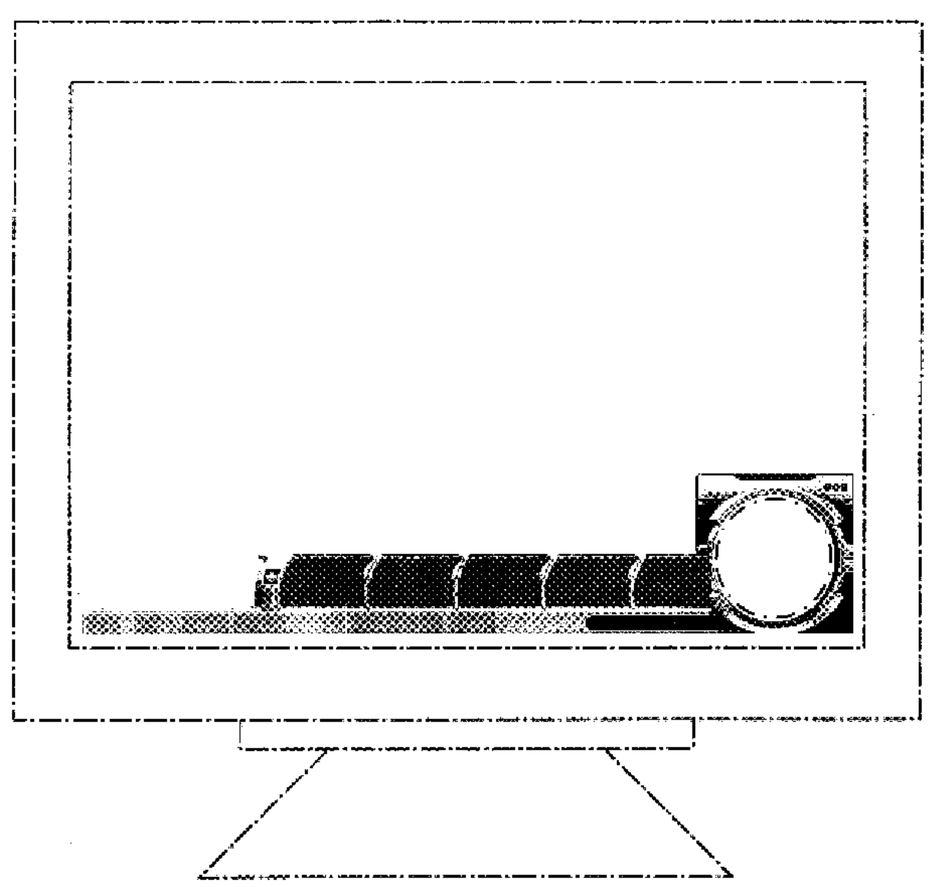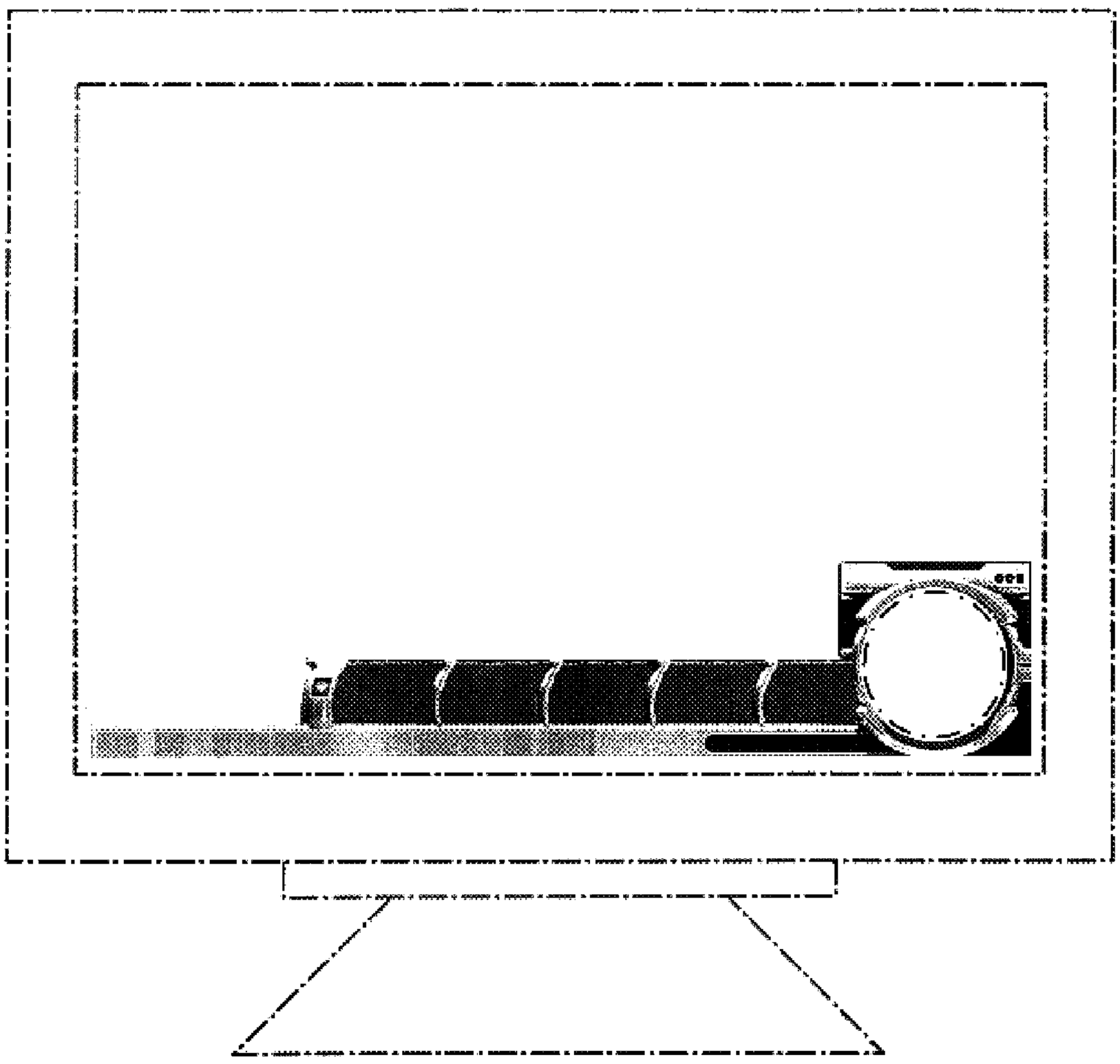
1 Claim, 1 Drawing Sheet