US00D528486S

(12) United States Design Patent

Stahel et al.

(10) Patent No.: US D528,486 S
(45) Date of Patent: ** Sep. 19, 2006

(54) **MOTORCYCLE LICENSE PLATE COVER**

(75) Inventors: **Alwin J. Stahel**, New Brighton, MN (US); **Brian K. Stahel**, New Brighton, MN (US)

(73) Assignee: **Kuryakyn Holdings, Inc.**, Somerset, WI (US)

(**) Term: **14 Years**

(21) Appl. No.: **29/237,957**

(22) Filed: **Sep. 8, 2005**

(51) **LOC (8) Cl.** **12-16**
(52) **U.S. Cl.** **D12/193**
(58) **Field of Classification Search** D12/110, D12/193; D6/300–303, 310–314; 40/200–210; 180/219; D26/28–35; 362/473, 546, 549, 362/497–499
See application file for complete search history.

(56) **References Cited**

U.S. PATENT DOCUMENTS

4,956,930	A	9/1990	Troncoso
D313,787	S	1/1991	Williams
D370,450	S	6/1996	Doan
6,556,337	B1	4/2003	Wright

OTHER PUBLICATIONS

Custom Chrome ® Chrome Specialties ® 2003 catalog, chrome license plate frame with auxiliary brake light, product number 78056, and Ness–Tech ® License Frame with Lights, shown on p. 5.39.*
Kuryakyn Catalogue pages, 1999 (2 pages).
Kuryakyn Catalogue pages, 2004 (4 pages).

* cited by examiner

Primary Examiner—Alan P. Douglas
Assistant Examiner—Linda Brooks
(74) *Attorney, Agent, or Firm*—Dicke, Billig & Czaja, PLLC

(57) **CLAIM**

The ornamental design for a motorcycle license plate cover, as shown and described.

DESCRIPTION

FIG. **1** is a perspective view of the motorcycle license plate cover of the present invention.
FIG. **2** is a front elevational view of the motorcycle license plate cover of FIG. **1**.
FIG. **3** is a rear elevational view of the motorcycle license plate cover of FIG. **1**.
FIG. **4** is a right side elevational view of the motorcycle license plate cover of FIG. **1**.
FIG. **5** is a left side elevational view of the motorcycle license plate cover of FIG. **1**.
FIG. **6** is a top plan view of the motorcycle license plate cover of FIG. **1**; and,
FIG. **7** is a bottom plan view of the motorcycle license plate cover of FIG. **1**.
The broken lines in the Figures are for illustrative purposes only and form no part of the present invention.

1 Claim, 7 Drawing Sheets

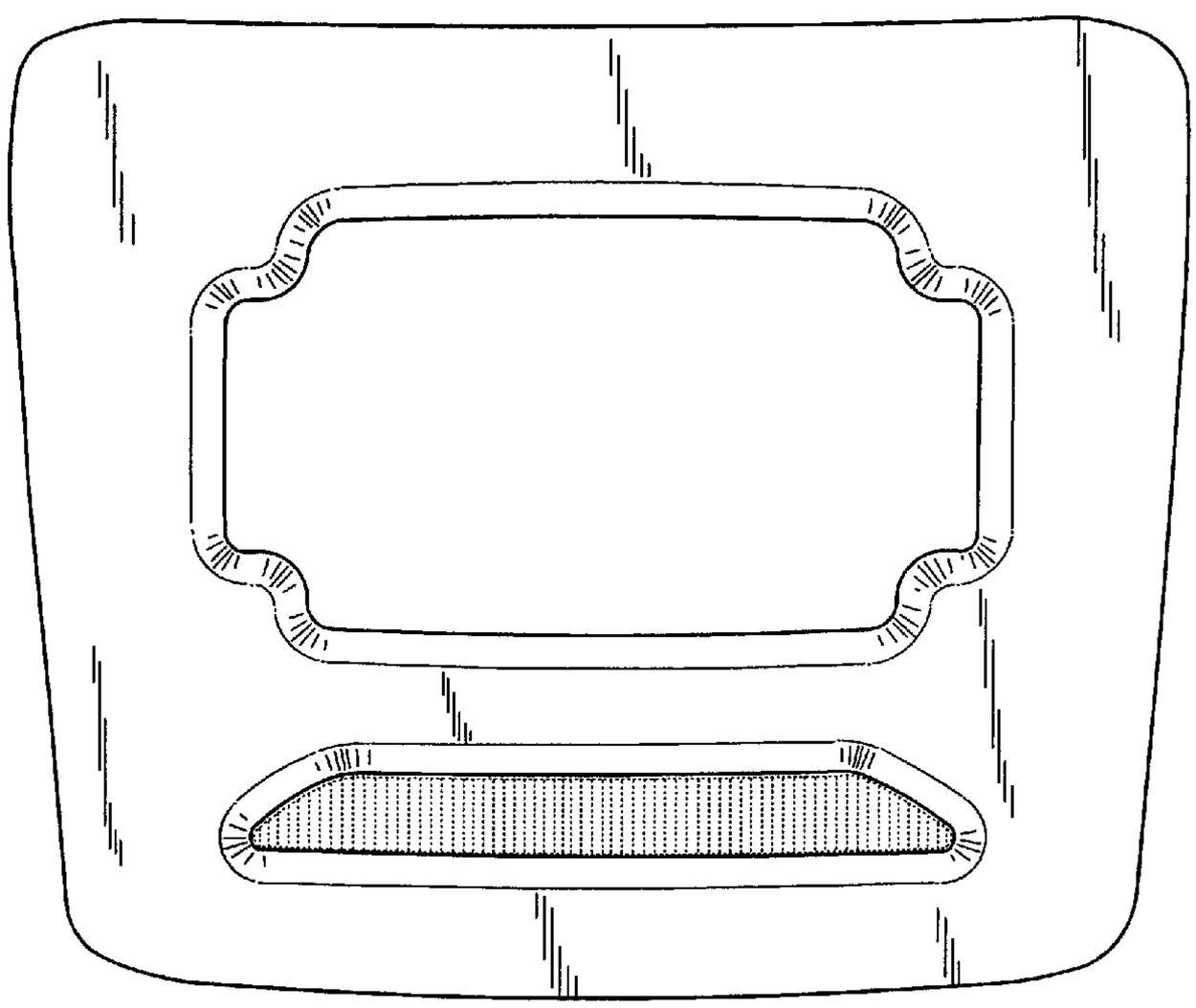

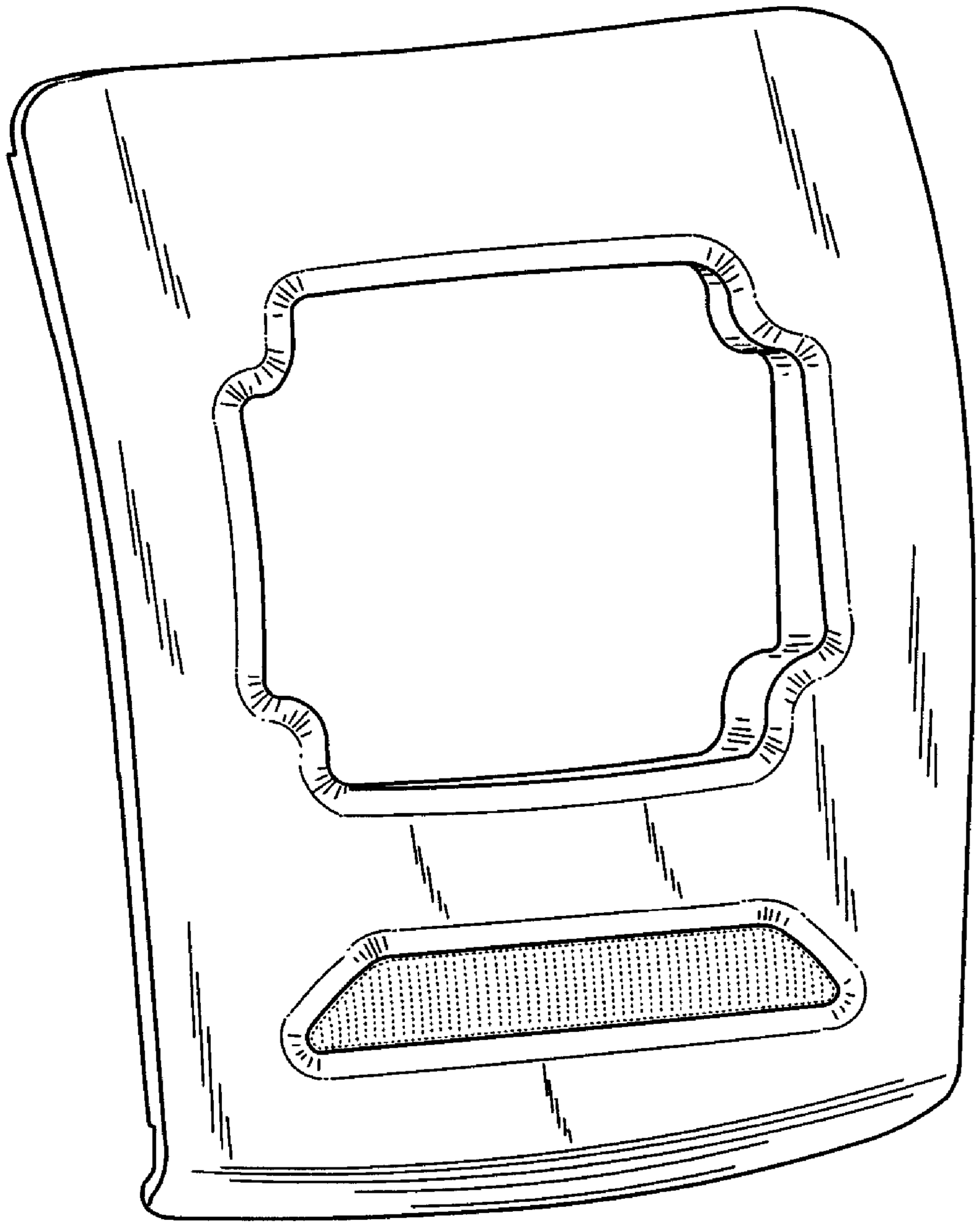

Fig. 1

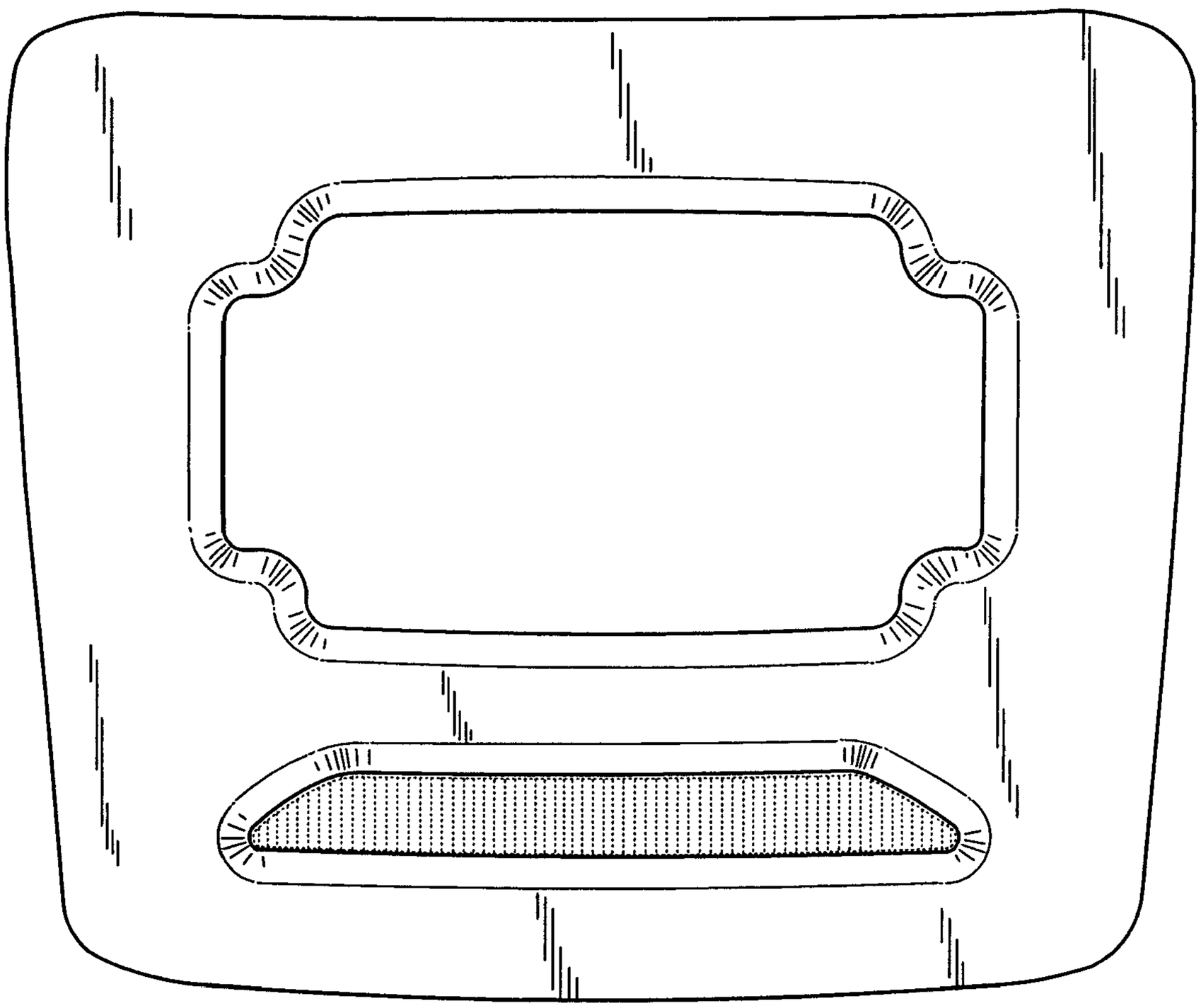

Fig. 2

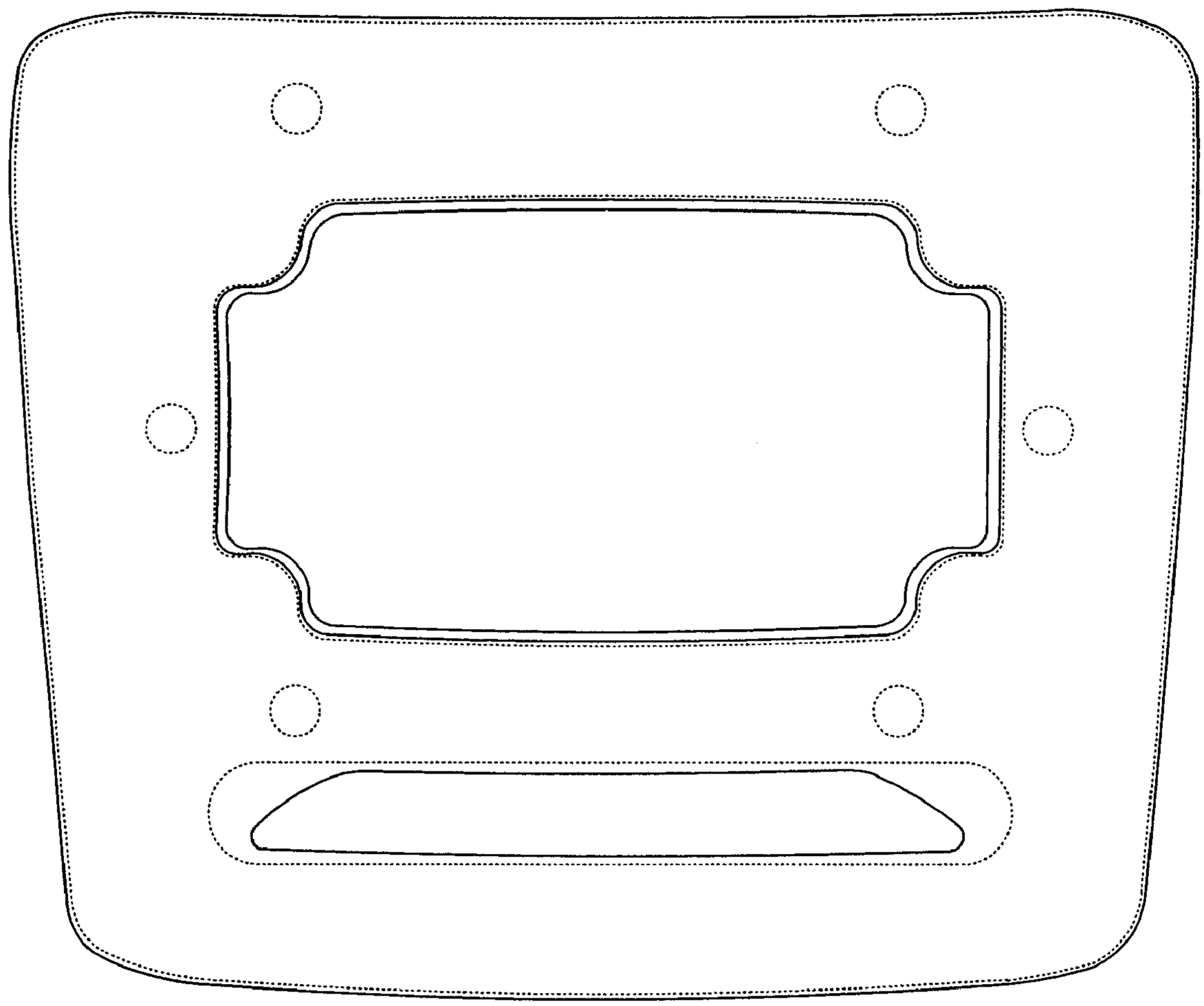

Fig. 3

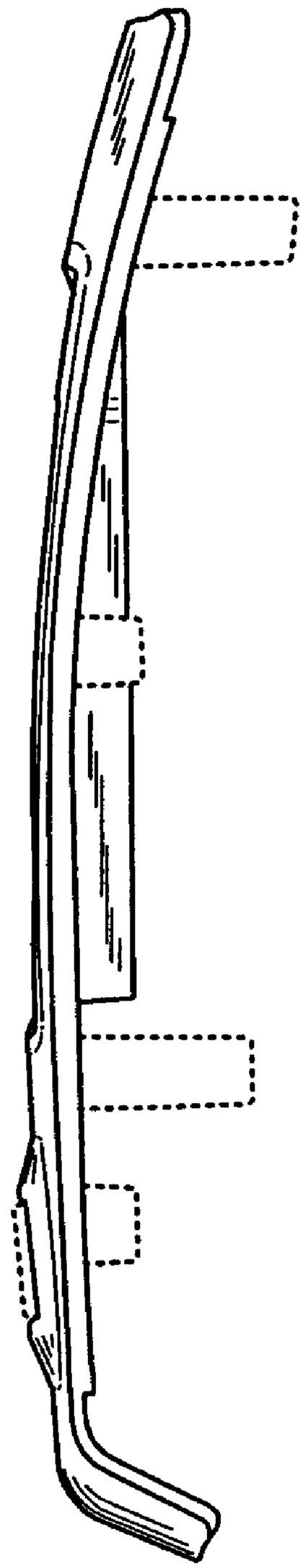

Fig. 4

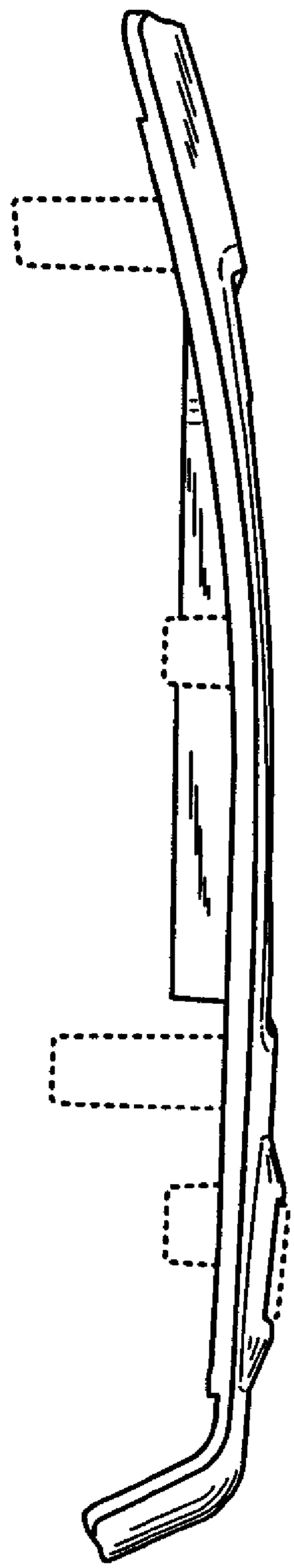

Fig. 5

Fig. 6

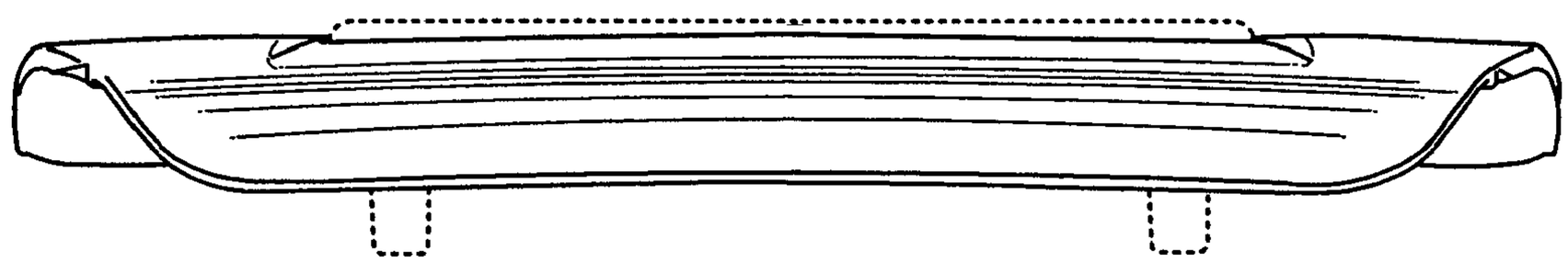

Fig. 7