US00D525791S

(12) United States Design Patent

Chang

(10) Patent No.: US D525,791 S
(45) Date of Patent: ** Aug. 1, 2006

(54) **TOOLS CASE**

(76) Inventor: **Chia-Ching Chang**, 4F, No. 12, Lane 23, Sec. 2, Baofu Rd., Yonghe City, Taipei County 234 (TW)

(**) Term: **14 Years**

(21) Appl. No.: **29/209,972**

(22) Filed: **Jul. 26, 2004**

(51) **LOC (8) Cl.** **03-01**
(52) **U.S. Cl.** **D3/315**
(58) **Field of Classification Search** D3/905, D3/273, 276, 283, 281, 291, 274, 282, 294, D3/315; 190/110, 111, 100; 220/752, 324, 220/326; 206/349, 372, 373; 312/902
See application file for complete search history.

(56) **References Cited**

U.S. PATENT DOCUMENTS

5,730,303 A * 3/1998 Chow 211/70.6
D412,245 S * 7/1999 Kopala, Jr. D3/315
D412,617 S * 8/1999 Kopala, Jr. D3/315
D433,613 S * 11/2000 Jialin D8/71
D464,486 S * 10/2002 Vasudeva D3/315
6,536,611 B1 * 3/2003 Chen 211/70.6
D472,389 S * 4/2003 Vasudeva D3/315
6,637,606 B1 * 10/2003 Chen 211/70.6
D481,543 S * 11/2003 Chen D3/315
6,896,136 B1 * 5/2005 Hu 206/378

* cited by examiner

Primary Examiner—Louis S. Zarfas
Assistant Examiner—Kathleen Sims
(74) *Attorney, Agent, or Firm*—Rosenberg, Klein & Lee

(57) **CLAIM**

The ornamental design for a tools case, as shown and described.

DESCRIPTION

FIG. **1** is a perspective view of a tools case, showing my new design;
FIG. **2** is a front elevational view thereof;
FIG. **3** is a rear elevational view thereof;
FIG. **4** is a top plane elevational view thereof;
FIG. **5** is a bottom plane elevational view thereof;
FIG. **6** is a left elevational view thereof;
FIG. **7** is a right elevational view thereof;
FIG. **8** is a in use state view thereof; and,
FIG. **9** is a in use state of opposite view thereof.

1 Claim, 9 Drawing Sheets

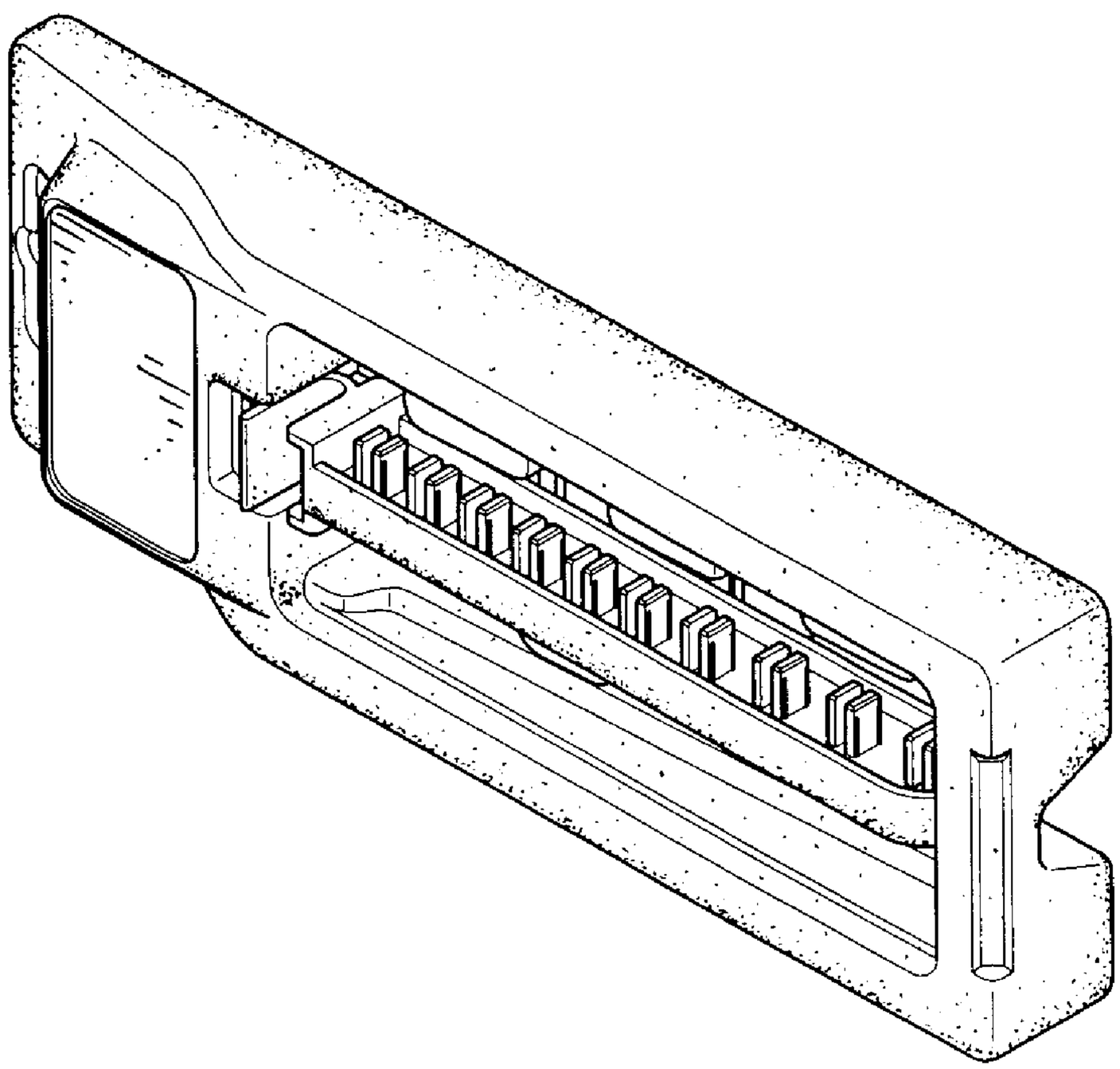

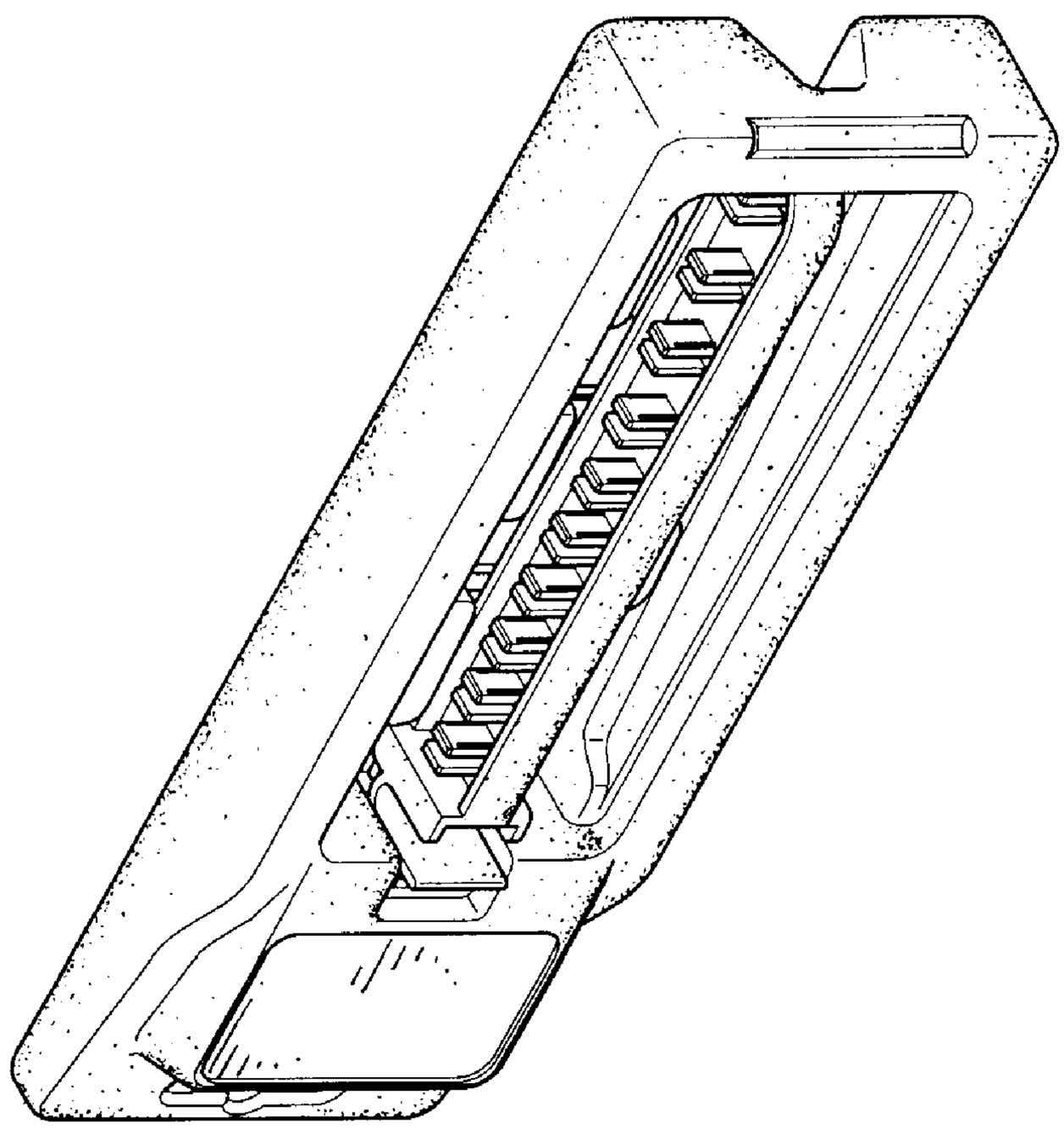

FIG. 1

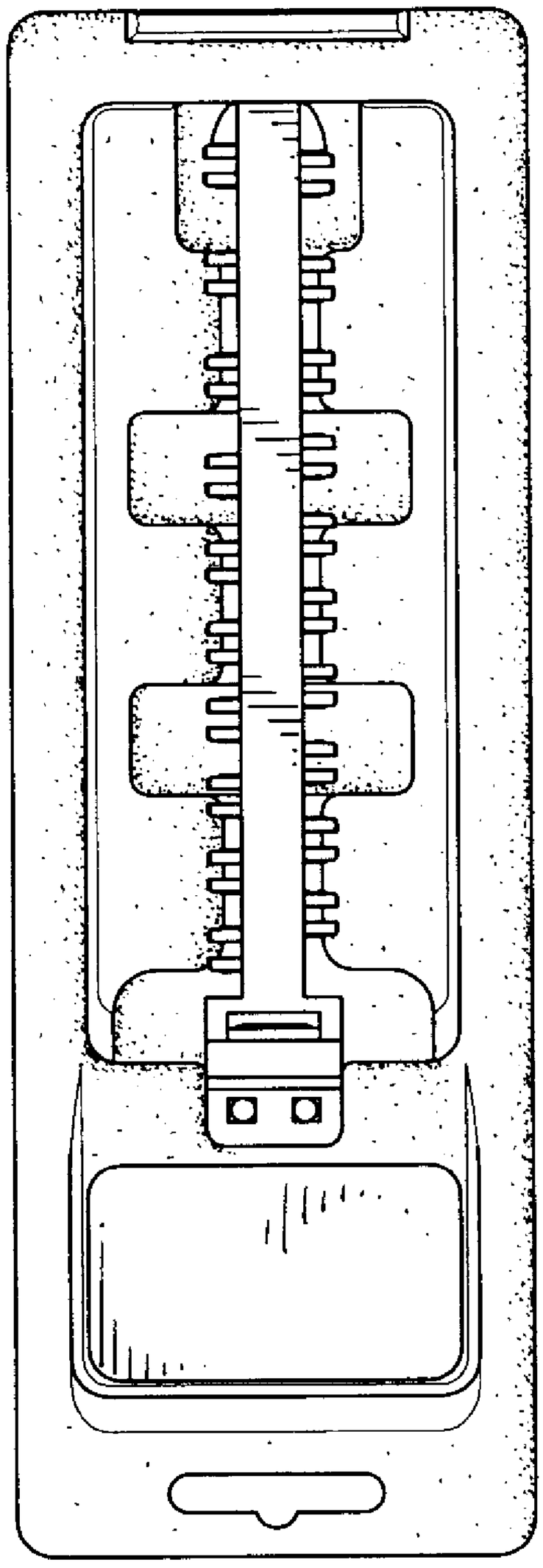

FIG. 2

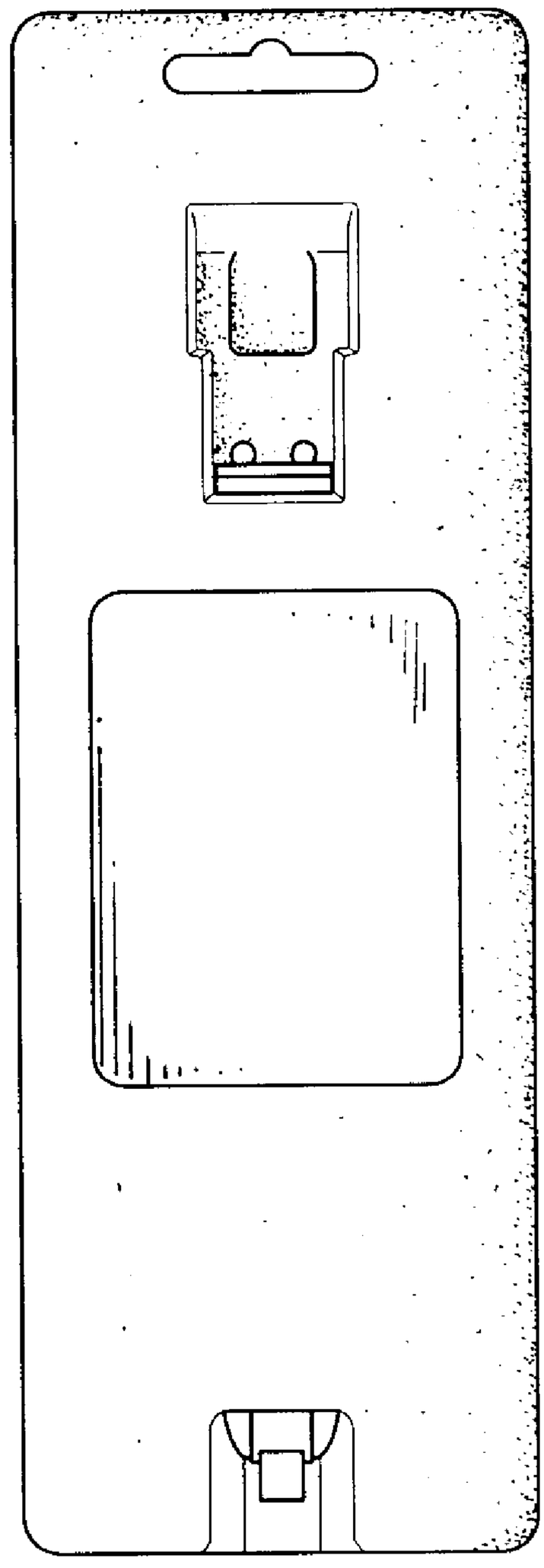

FIG. 3

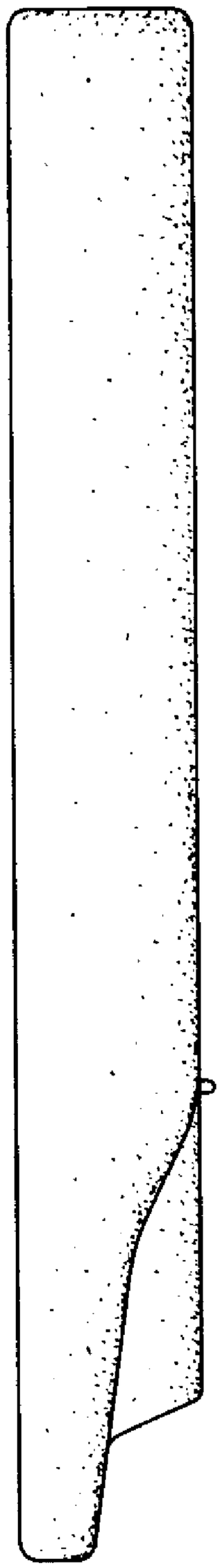

FIG. 4

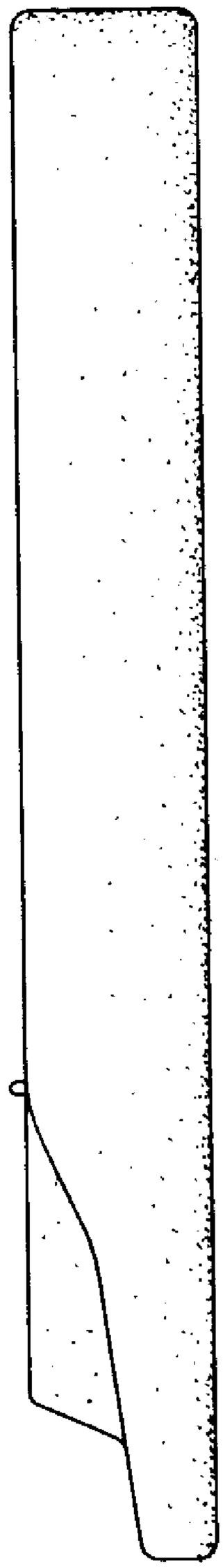

FIG. 5

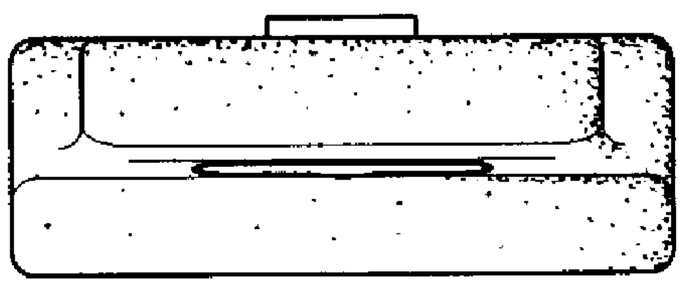

FIG. 6

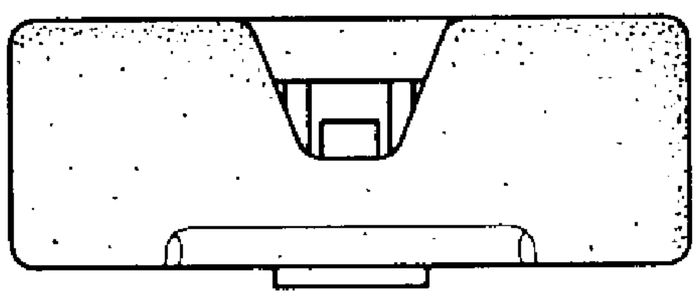

FIG. 7

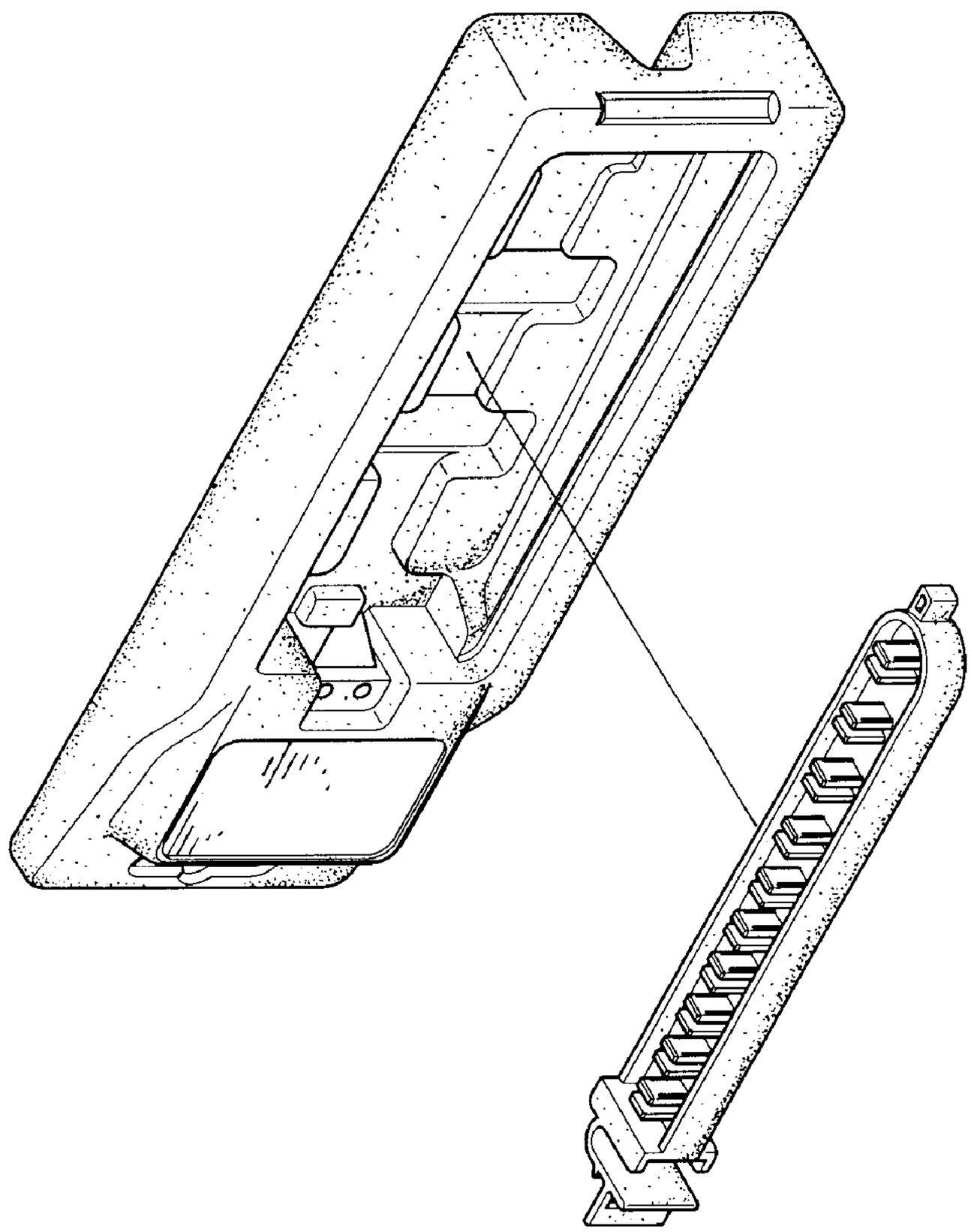

FIG. 8

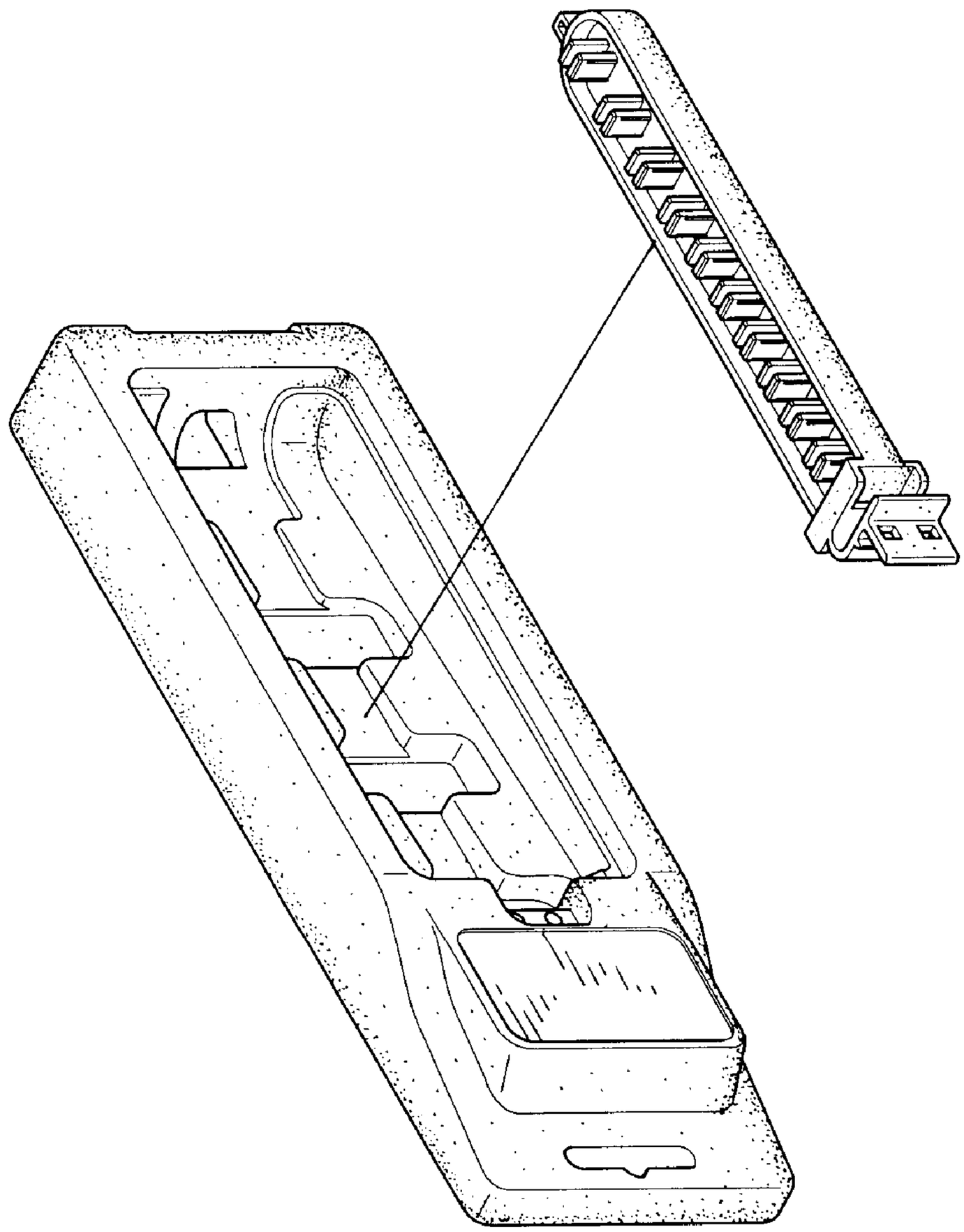

FIG. 9