US00D523404S

(12) United States Design Patent

Sisson

(10) Patent No.: US D523,404 S
(45) Date of Patent: ** Jun. 20, 2006

(54) **PORTION OF A FUNNEL PLATE**

(75) Inventor: **Thomas P. Sisson**, Forest, VA (US)

(73) Assignee: **Danville Automation Holdings LLC**, Lynchberg, VA (US)

(**) Term: **14 Years**

(21) Appl. No.: **29/230,974**

(22) Filed: **May 27, 2005**

(51) **LOC (8) Cl.** **13-03**
(52) **U.S. Cl.** **D13/182**
(58) **Field of Classification Search** D13/182, D13/184, 199; D8/350–353; 414/403, 404; 249/105, 108; 206/701, 710, 711, 725, 707, 206/714, 713, 724, 706, 722, 564, 561, 509, 206/539, 563, 557, 508, 486, 832
See application file for complete search history.

(56) **References Cited**

U.S. PATENT DOCUMENTS

D273,582	S	*	4/1984	Bolt	D13/182
D273,860	S	*	5/1984	Bolt	D13/182
4,448,306	A	*	5/1984	Sinnadurai et al.	206/725
4,881,639	A	*	11/1989	Matsuoka et al.	206/724
5,103,976	A	*	4/1992	Murphy	206/719
5,131,535	A	*	7/1992	O'Connor et al.	206/722
5,203,452	A	*	4/1993	Small et al.	206/725
5,400,904	A	*	3/1995	Maston et al.	206/725
5,481,438	A	*	1/1996	Nemoto	361/810
5,492,223	A	*	2/1996	Boardman et al.	206/710
5,503,858	A	*	4/1996	Reskow	426/119
5,746,319	A	*	5/1998	Murphy	206/725
5,772,038	A	*	6/1998	Murata et al.	206/725
5,791,486	A	*	8/1998	Brahmbhatt	206/725
5,794,784	A	*	8/1998	Murphy	206/725
5,848,703	A	*	12/1998	Murphy et al.	206/725
D412,888	S	*	8/1999	Coveley	D13/182
5,957,293	A	*	9/1999	Pakeriasamy	206/725
5,960,961	A	*	10/1999	Gutentag	206/714
6,015,046	A	*	1/2000	Brunelle	206/511
6,021,904	A	*	2/2000	Kozol et al.	206/724
6,179,127	B1	*	1/2001	Kato et al.	206/714
6,227,372	B1	*	5/2001	Thomas et al.	206/725
6,296,122	B1	*	10/2001	Nakazono et al.	206/707
6,474,477	B1	*	11/2002	Chang	206/725
6,612,442	B1	*	9/2003	Soh et al.	206/725
D496,339	S	*	9/2004	Stanley	D13/182
6,857,524	B1	*	2/2005	Duban-Hu et al.	206/725
2001/0023839	A1	*	9/2001	Kunii et al.	206/711
2002/0066693	A1	*	6/2002	Zhu et al.	206/725
2002/0066694	A1	*	6/2002	Soh et al.	206/725
2002/0162770	A1	*	11/2002	Chang	206/725
2003/0230512	A1	*	12/2003	Yeh	206/714
2004/0011700	A1	*	1/2004	Brahmbhatt et al.	206/713

* cited by examiner

Primary Examiner—Stella Reid
Assistant Examiner—Mark Goodwin
(74) *Attorney, Agent, or Firm*—St. Onge Steward Johnston & Reens LLC

(57) **CLAIM**

The ornamental design for a portion of a funnel plate, as shown and described.

DESCRIPTION

FIG. **1** is a side cross sectional view of the portion of a funnel plate shown in FIG. **2** along line **6—6**;
FIG. **2** is a front isometric view of the portion of a funnel plate of FIG. **1**;
FIG. **3** is a top view of the portion of a funnel plate of FIG. **1**;
FIG. **4** is a bottom view of the portion of a funnel plate of FIG. **1**;
FIG. **5** is a side cross sectional view of the portion of a funnel plate shown in FIG. **2** along line **5—5**; and,
FIG. **6** is a side cross sectional view of the portion of a funnel plate shown in FIG. **2** along line **6—6**.
The broken line illustrations in the drawing figures of the portion of a funnel plate are for illustrative purposes only and form no part of the claimed design. The broken lines showing a square shape in FIGS. **1, 2, 3,** & **4** represent the boundary of the design. The sectional views of FIGS. **5** & **6** are included to clarify the shape of the design, and the broken lines therein form no part of the claimed design.

1 Claim, 2 Drawing Sheets

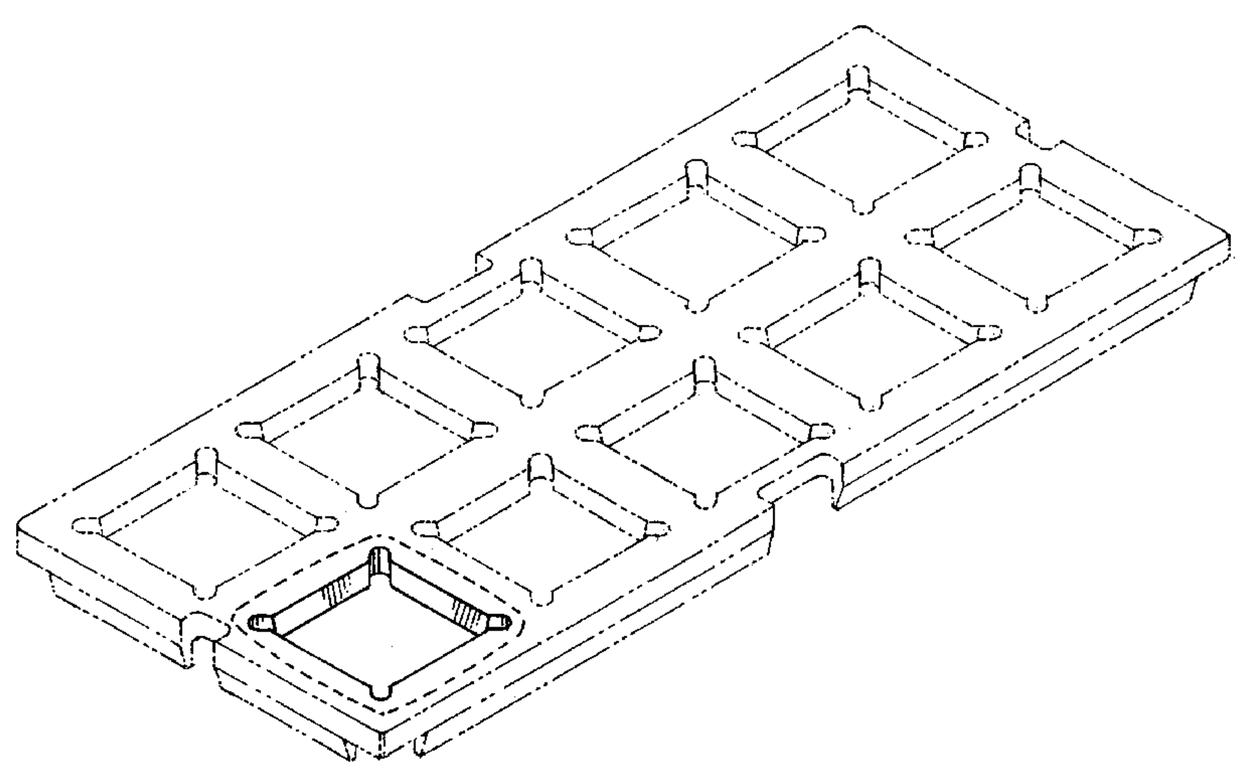

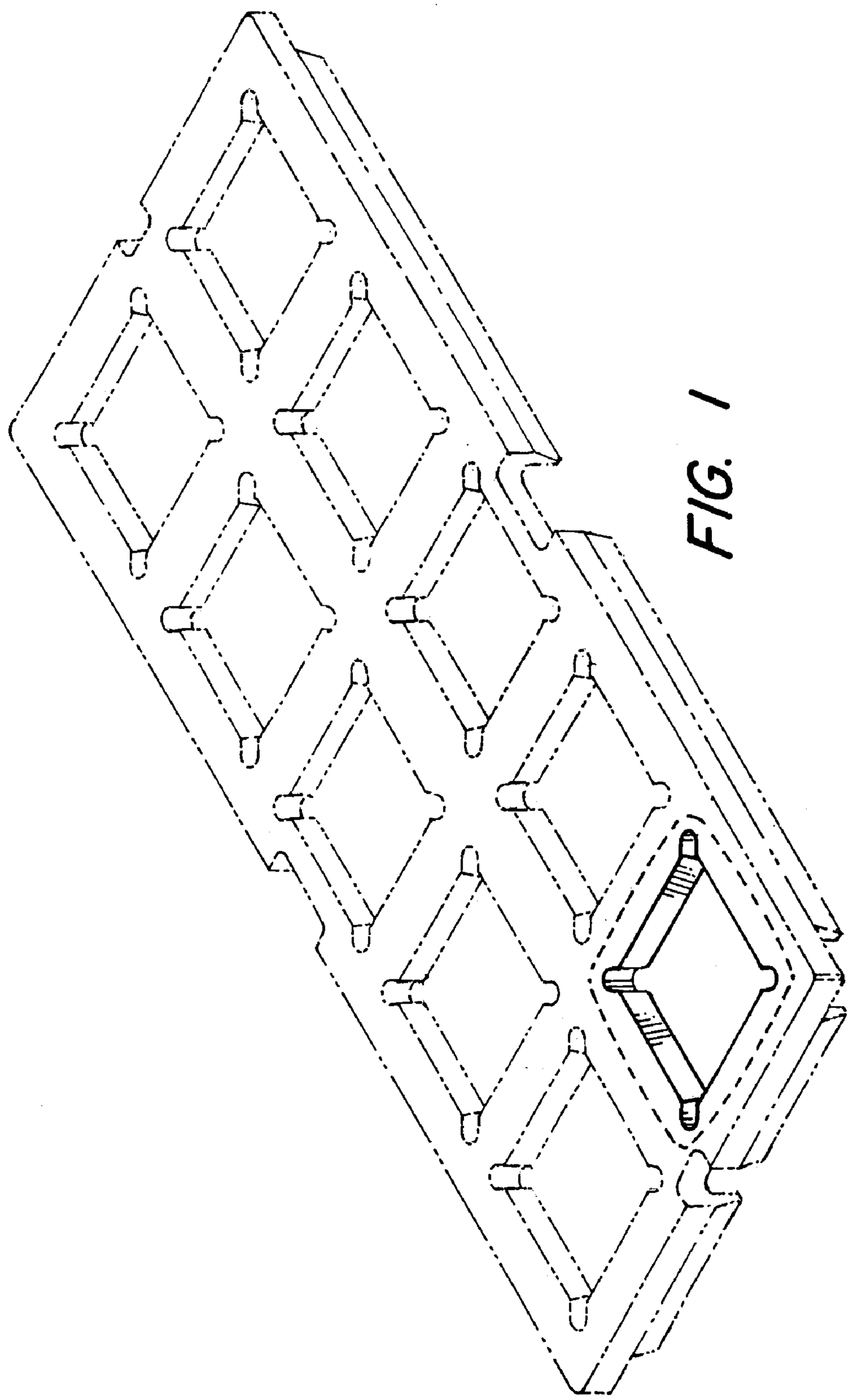

FIG. 1

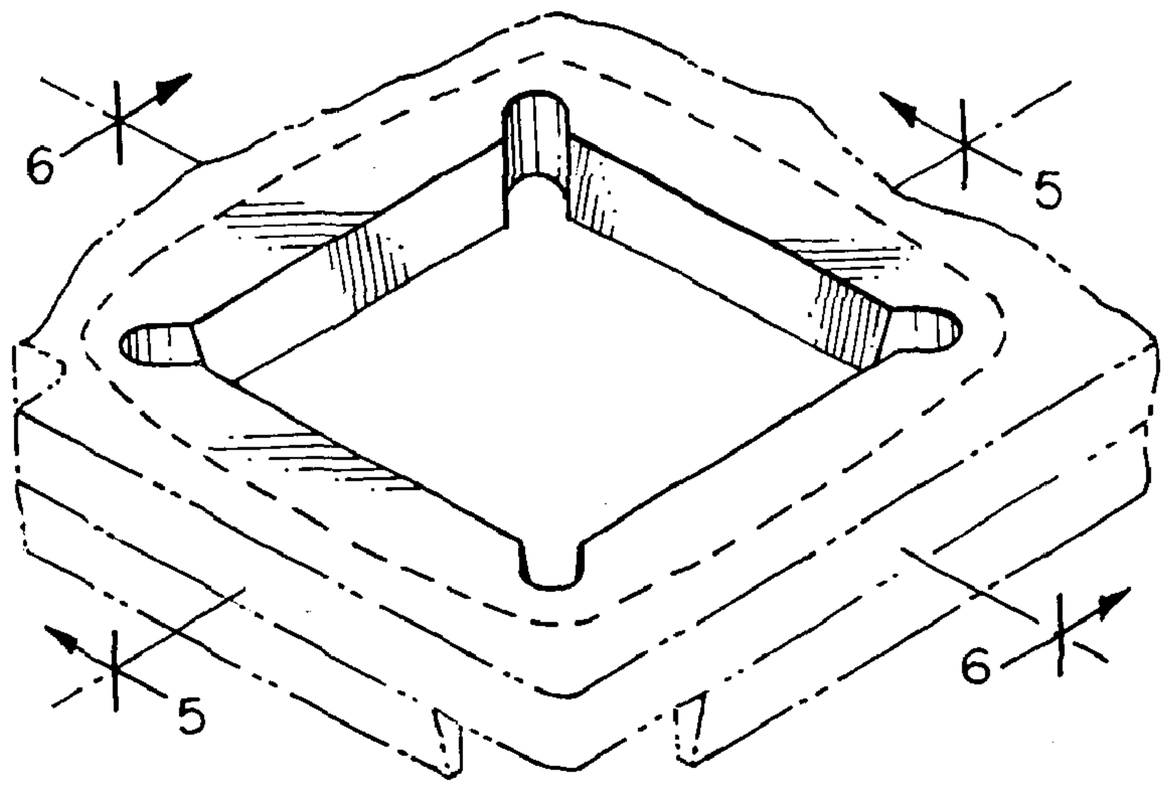

FIG. 2

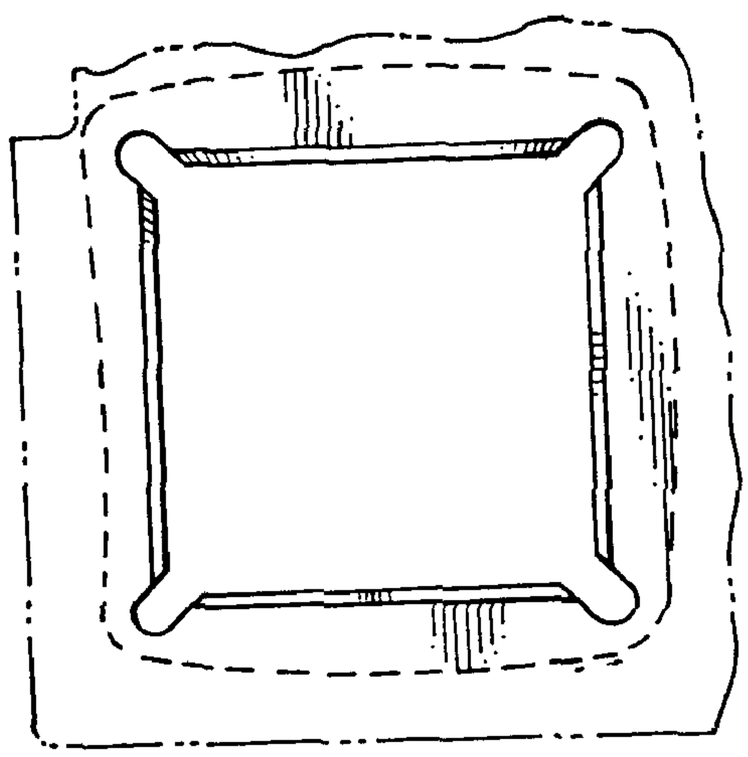

FIG. 3

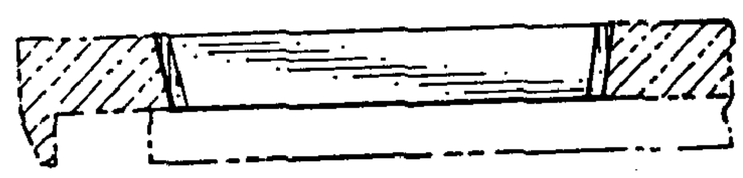

FIG. 5

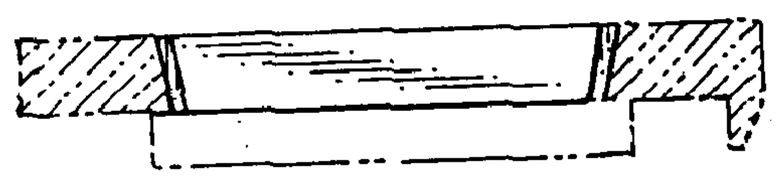

FIG. 6

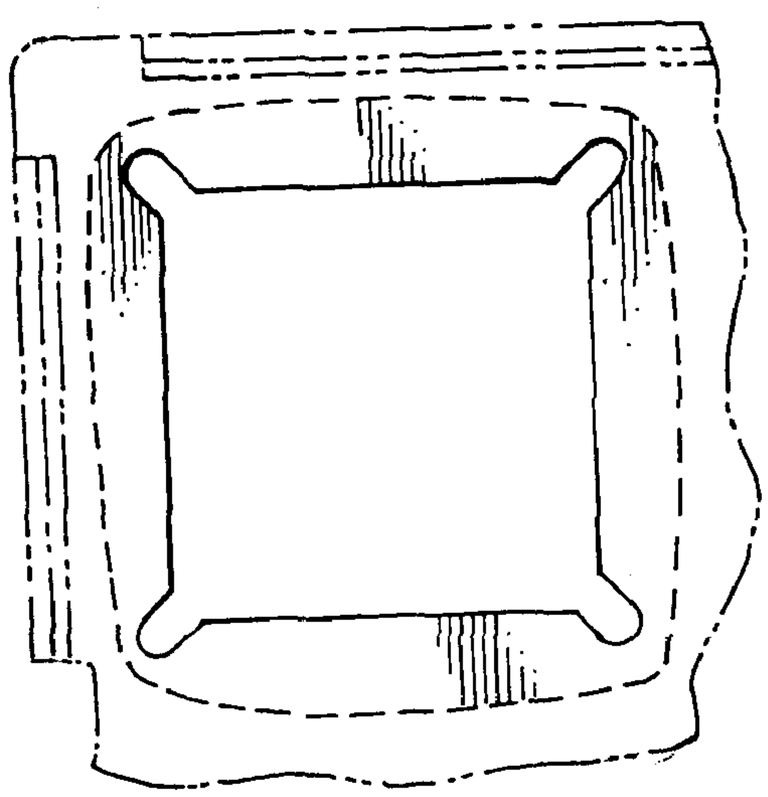

FIG. 4