US00D521788S

(12) United States Design Patent

Nida

(10) Patent No.: US D521,788 S
(45) Date of Patent: ** May 30, 2006

(54) **DECORATIVE WISHING WELL PAPER ROLL HOLDER**

(76) Inventor: **Bryan W. Nida**, 1022 Egurrola Pl., Boise, ID (US) 83709

(**) Term: **14 Years**

(21) Appl. No.: **29/212,181**

(22) Filed: **Aug. 26, 2004**

(51) **LOC (8) Cl.** **23-02**
(52) **U.S. Cl.** **D6/523**; D6/521
(58) **Field of Classification Search** D6/515–523; 206/225, 233, 389, 391, 812, 824; 211/13.1, 211/45; 222/173, 180; 221/26, 33, 282–283; 224/925; 242/570, 590; 248/309.1, 309.2, 248/905; D12/17, 19
See application file for complete search history.

(56) **References Cited**

U.S. PATENT DOCUMENTS

D199,418	S	*	10/1964	Katz	D9/609
D240,069	S	*	5/1976	Lopez	D25/7
D284,313	S	*	6/1986	Sidney	D11/157
D304,810	S	*	11/1989	Thurman	D25/7
D314,107	S	*	1/1991	Lewis et al.	D6/518
D384,274	S	*	9/1997	Tolpin	D9/604
D422,170	S	*	4/2000	Harris, Jr.	D6/521
6,405,972	B1	*	6/2002	Wakam	242/597.7
D463,716	S	*	10/2002	Seater	D9/608
D467,106	S		12/2002	Bohay	D6/523
D478,753	S	*	8/2003	Hall et al.	D6/523
D483,584	S		12/2003	Perfetto	D6/523
D489,641	S	*	5/2004	Puntch	D11/160
D503,018	S	*	3/2005	Shih	D9/601
D504,052	S	*	4/2005	Wang	D7/628

OTHER PUBLICATIONS

Two pages from www.bearfamilygifts.com web site prior to Mar. 1, 2004.

* cited by examiner

Primary Examiner—Brian N Vinson
(74) *Attorney, Agent, or Firm*—Penderson & Co., PLLC; Ken J. Pedersen; Barbara S. Penderson

(57) **CLAIM**

The ornamental design for a decorative wishing well paper roll holder, as shown and described.

DESCRIPTION

FIG. **1** is a front perspective view of one embodiment of the invented design for a decorative wishing well paper roll holder.

FIG. **2** is a front view of the embodiment shown in FIG. **1**.

FIG. **3** is a left side view of the embodiment shown in FIG. **1**.

FIG. **4** is a rear view of the embodiment shown in FIG. **1**.

FIG. **5** is a right side view of the embodiment shown in FIG. **1**.

FIG. **6** is a top view of the embodiment shown in FIG. **1**.

FIG. **7** is a bottom view of the embodiment shown in FIG. **1**.

FIG. **8** is a front perspective view of an embodiment of the invented design for a decorative wishing well paper roll holder, wherein the paper roll is shown in dashed lines as background and is not part of the invented design, and wherein a supporting post is added between the top and bottom portions of the decorative wishing well paper roll holder; and,

FIG. **9** is a front view of the invented design for a decorative wishing well paper roll holder, wherein the paper roll is shown in dashed lines as background and is not part of the invented design.

1 Claim, 9 Drawing Sheets

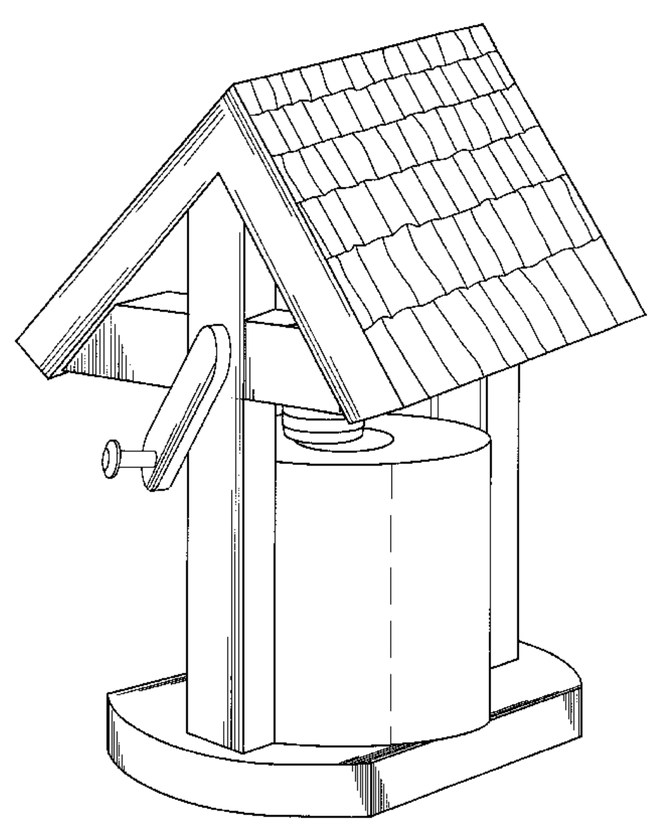

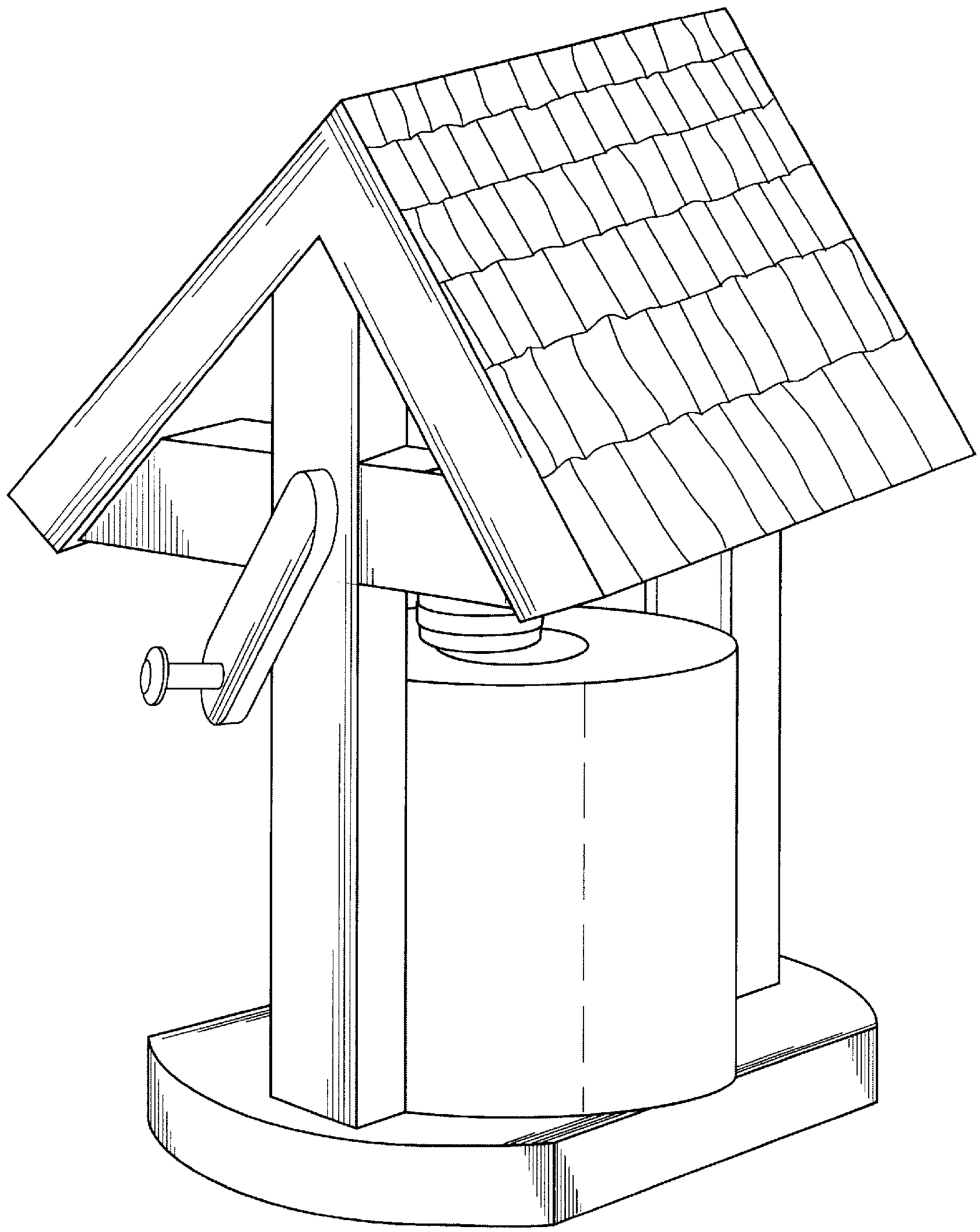

FIG. 1

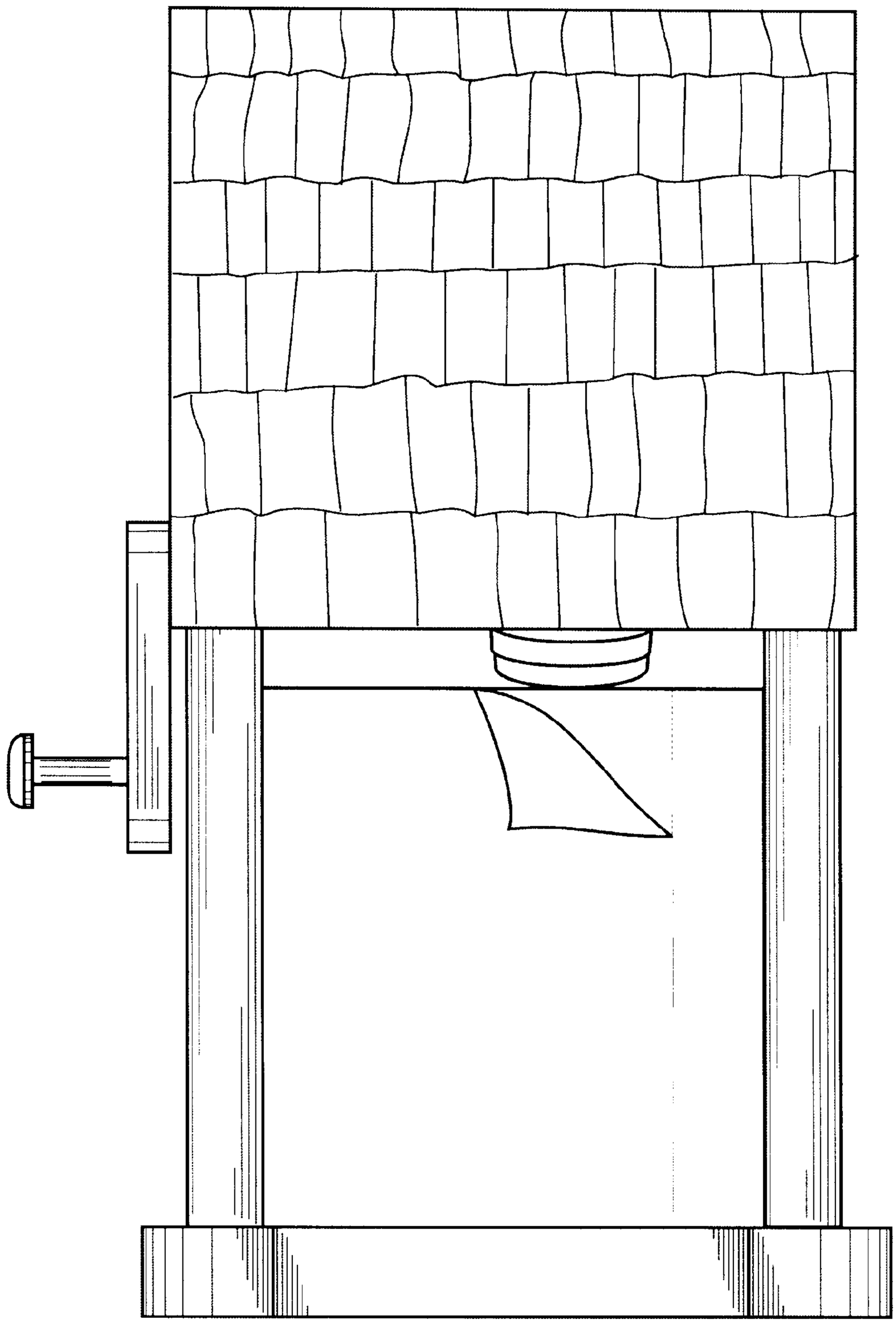

FIG. 2

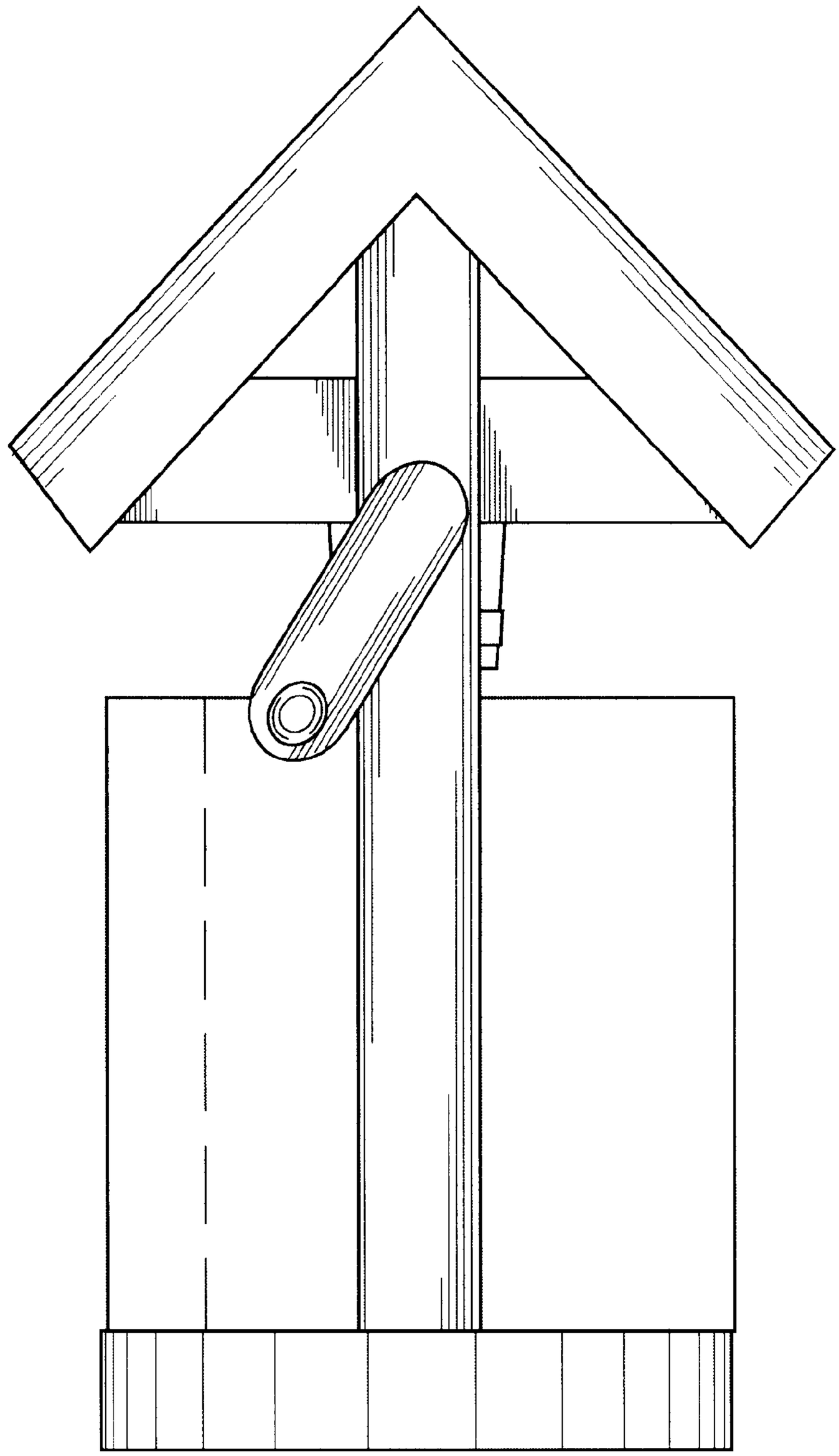

FIG. 3

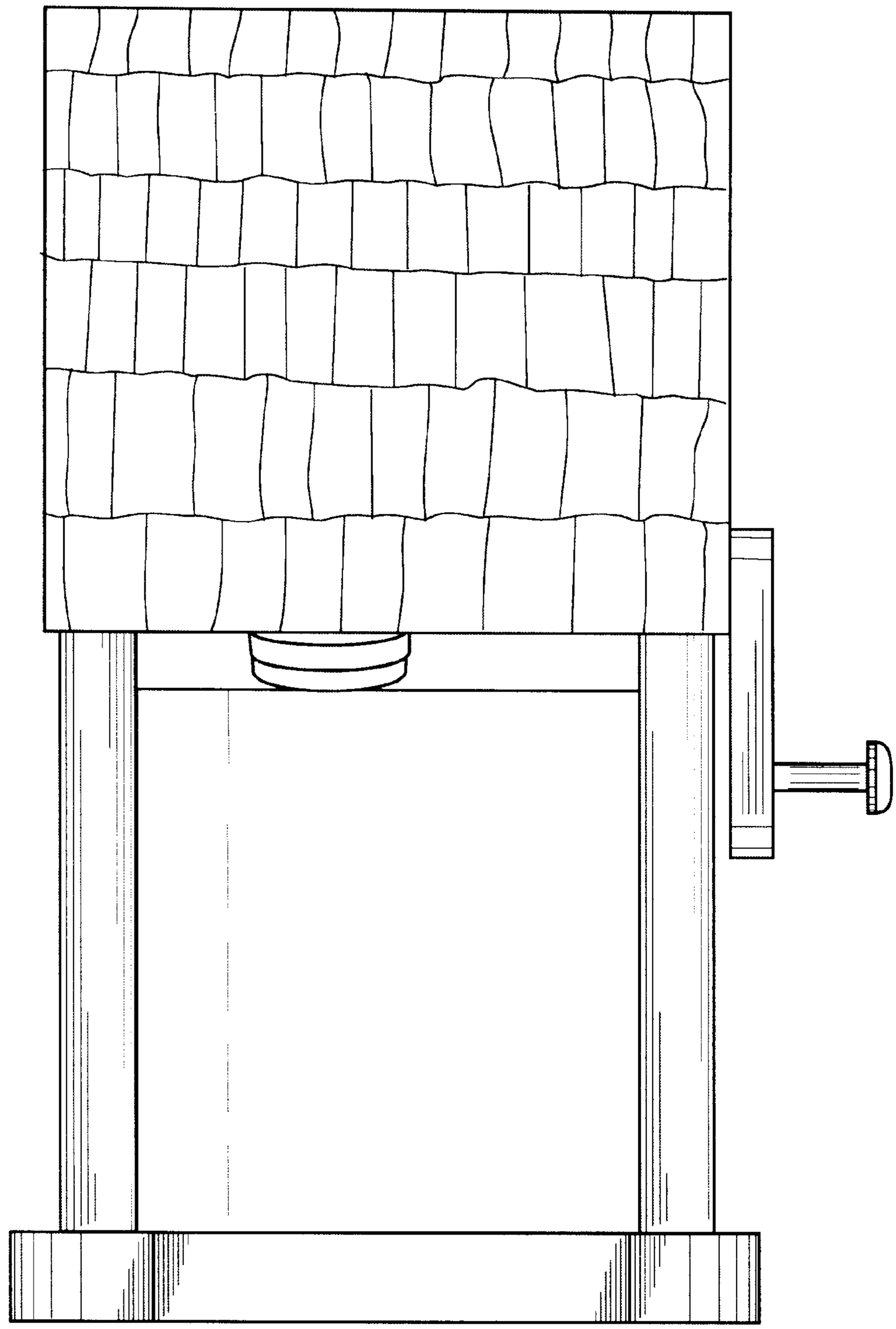

FIG. 4

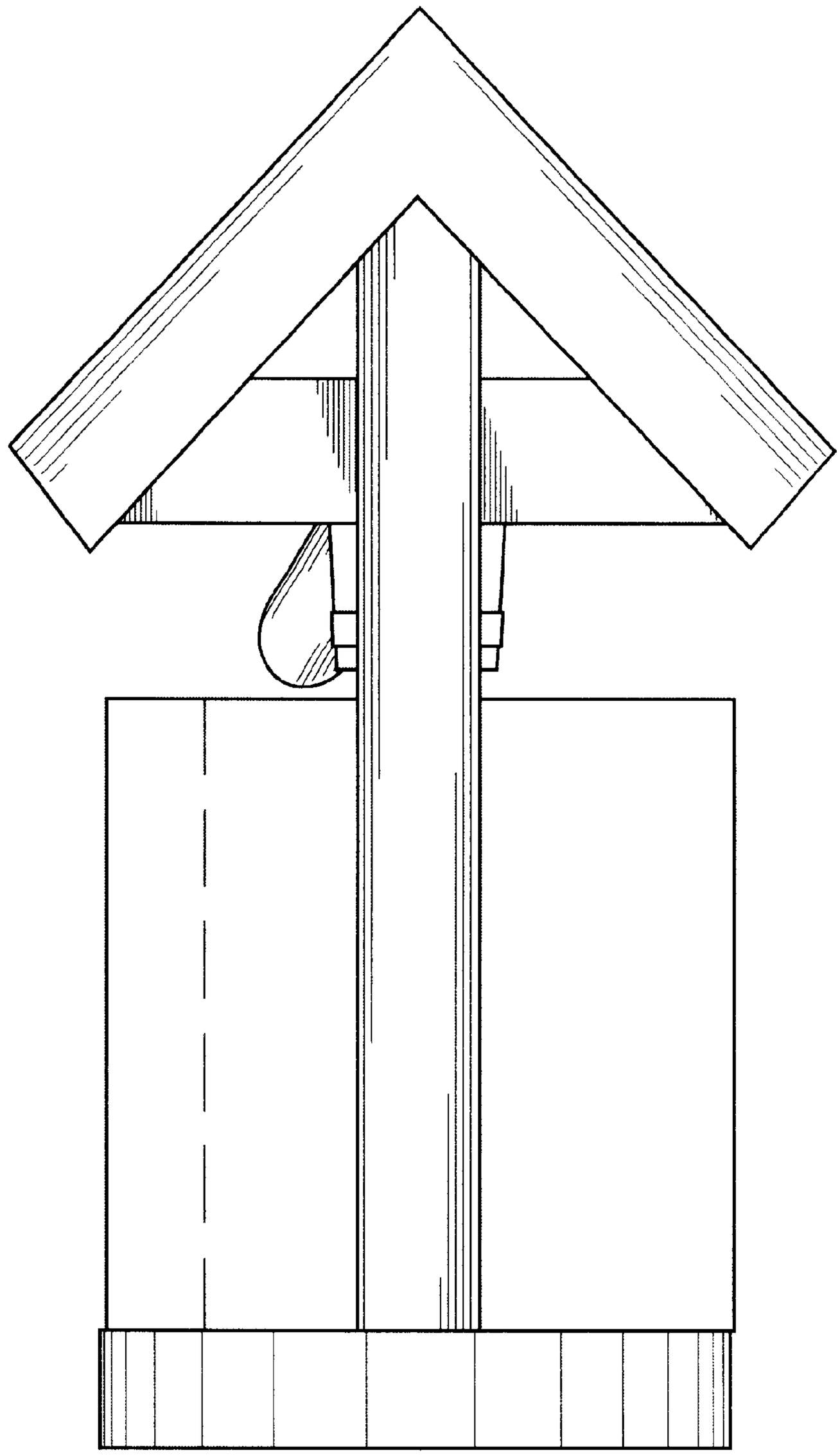

FIG. 5

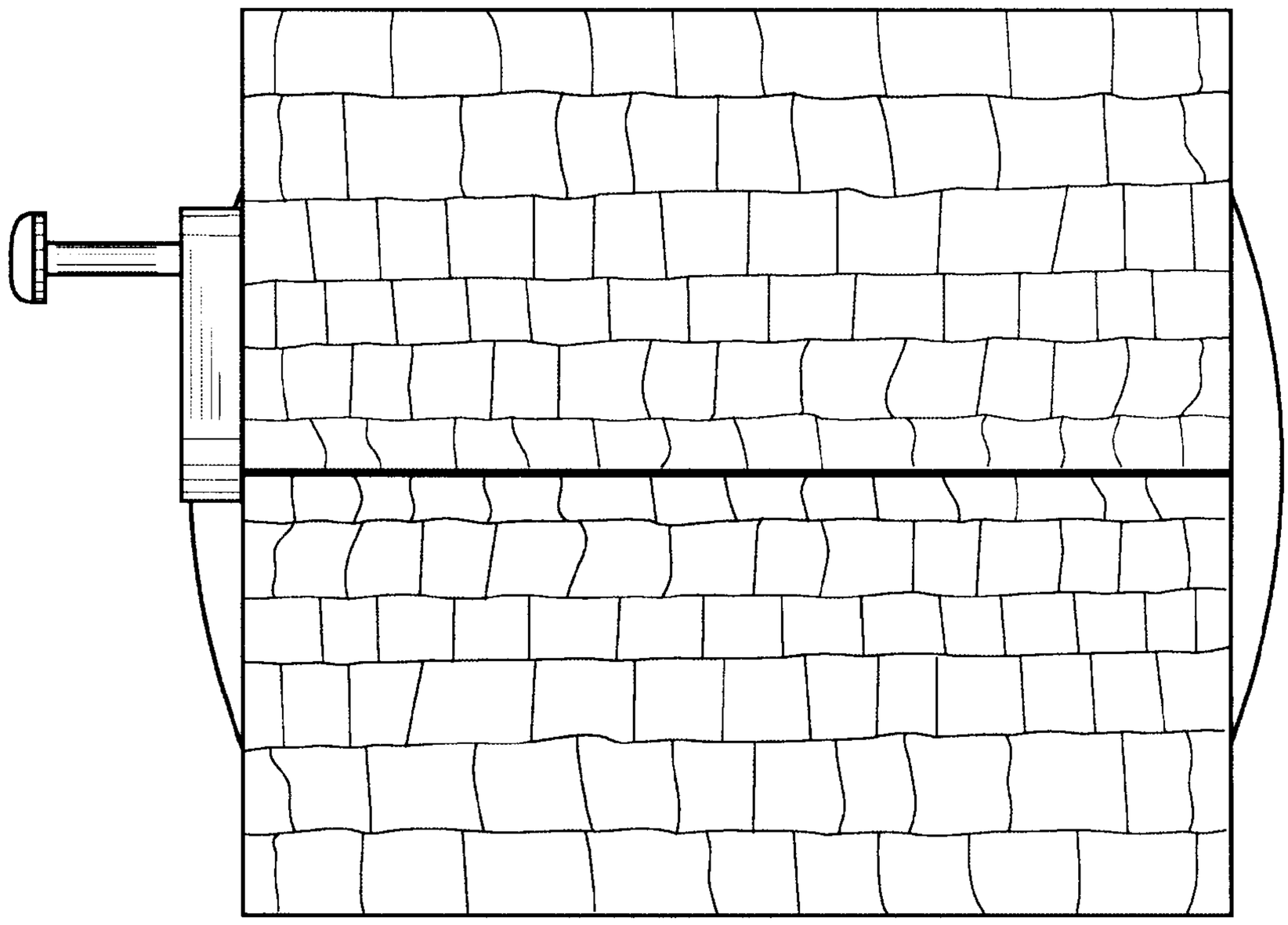

FIG. 6

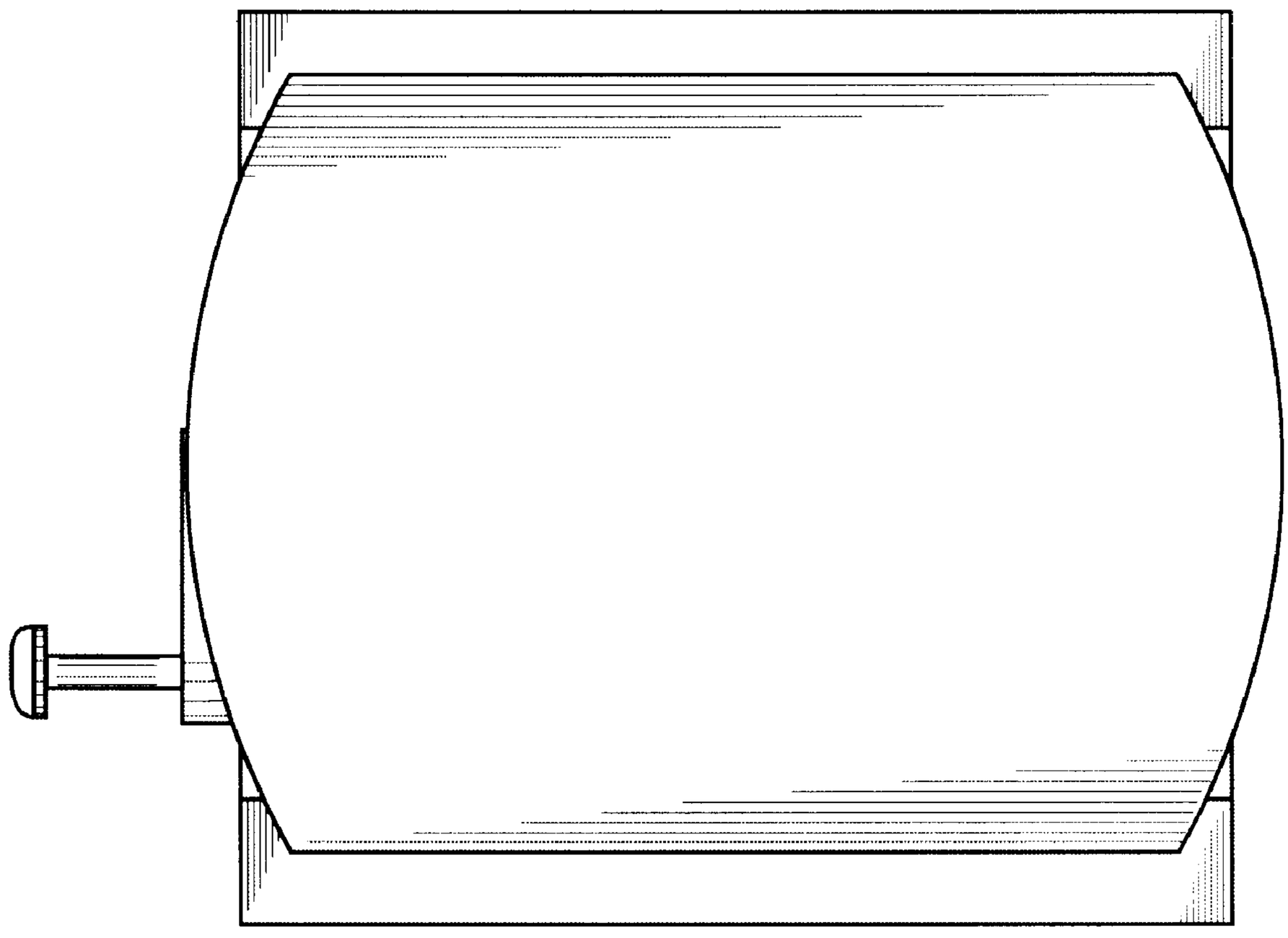

FIG. 7

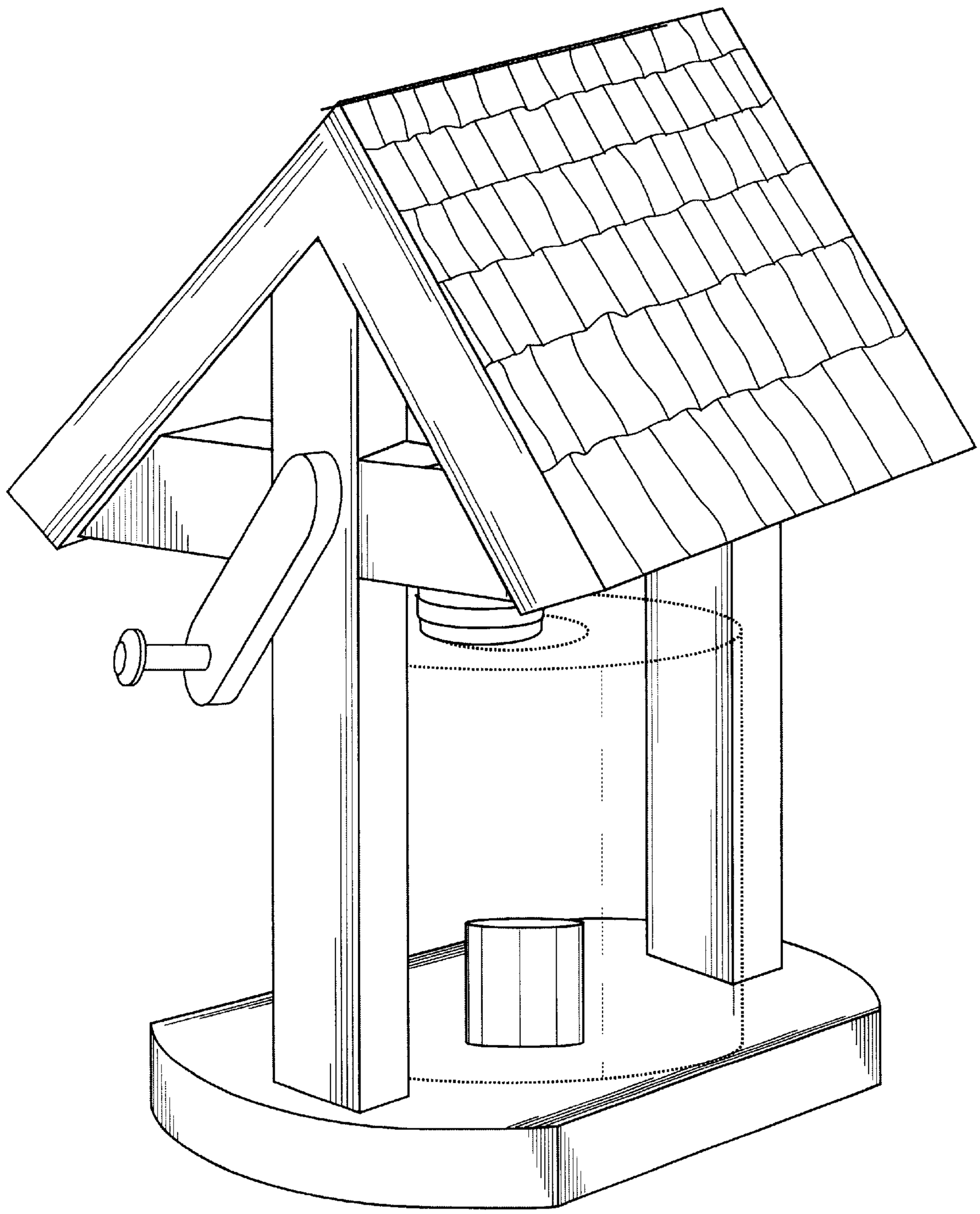

FIG. 8

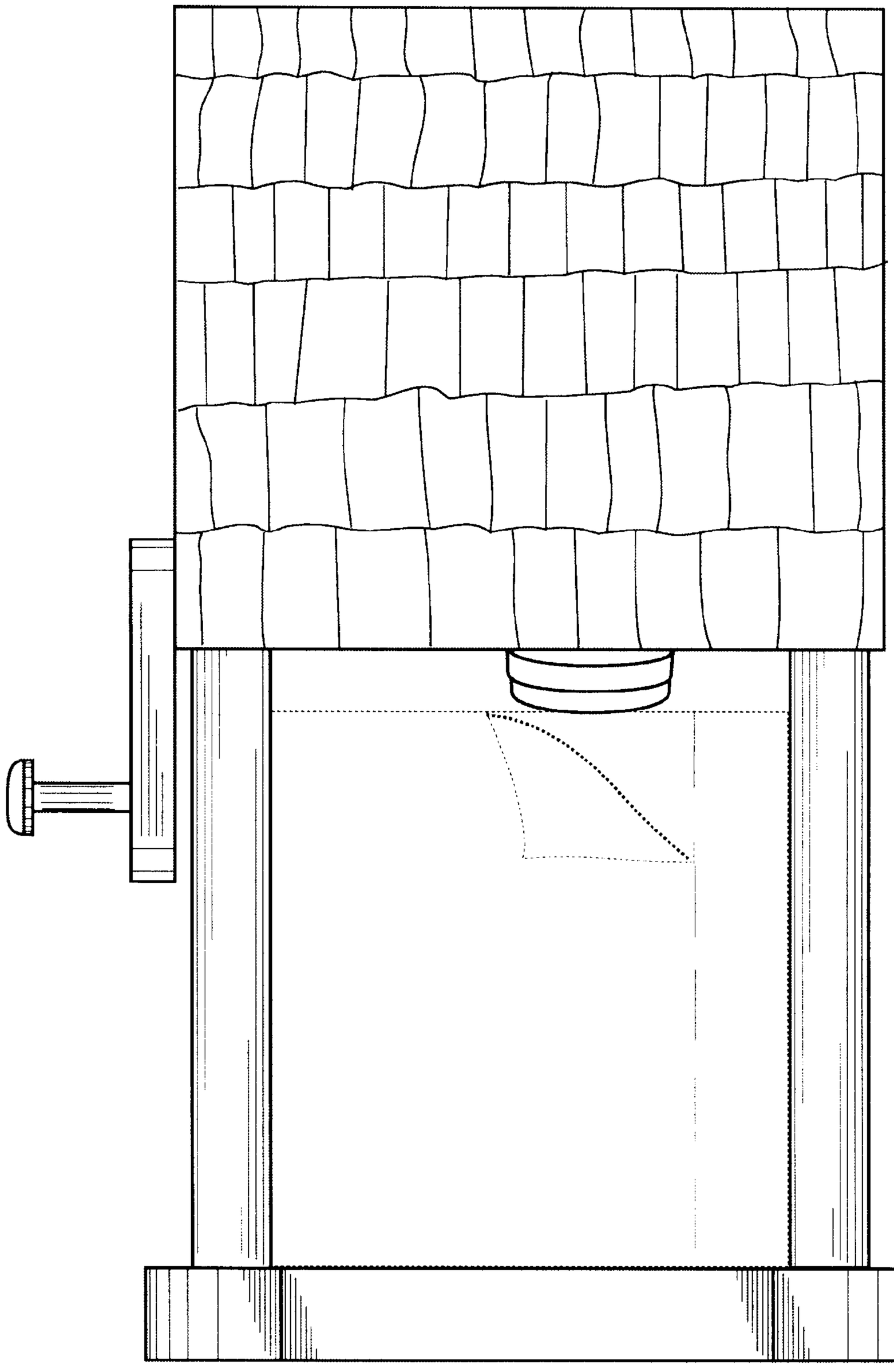

FIG. 9