US00D517246S

(12) United States Design Patent

Henson

(10) Patent No.: US D517,246 S
(45) Date of Patent: ** Mar. 14, 2006

(54) **BODY HARNESS**

(75) Inventor: **William E. Henson**, Otter Lake, MI (US)

(73) Assignee: **American Escape Systems, Inc.**, Rochester Hills, MI (US)

(**) Term: **14 Years**

(21) Appl. No.: **29/169,175**

(22) Filed: **Oct. 16, 2002**

(51) **LOC (8) Cl.** **30-04**
(52) **U.S. Cl.** **D29/101.4**
(58) **Field of Classification Search** D29/100, D29/101.1–101.5, 122, 124; D2/829, 830; D21/804, 805; 182/3–6, 231–235, 71–73; 2/462–464, 467, 102; 441/106, 110, 111, 441/112, 114–118; D8/358
See application file for complete search history.

(56) **References Cited**

U.S. PATENT DOCUMENTS

1,065,385 A * 6/1913 Bailey 441/115
3,424,134 A * 1/1969 Rosenblum 182/3
3,701,395 A * 10/1972 Theobald 182/3
4,130,176 A * 12/1978 Paulie 182/4
4,877,110 A * 10/1989 Wolner 182/232
4,934,484 A * 6/1990 Green et al. 182/5
5,174,410 A * 12/1992 Casebolt 182/3
5,220,976 A * 6/1993 Gunter 182/3
5,295,765 A * 3/1994 Choi 405/186
D354,393 S * 1/1995 Mocca D29/101.3
5,398,340 A * 3/1995 Kibbee 2/2.5
6,128,782 A * 10/2000 Young et al. 2/69
6,367,582 B1 * 4/2002 Derby 182/3
6,745,872 B1 * 6/2004 Sato 182/238
6,808,046 B1 * 10/2004 Henson 182/3

* cited by examiner

Primary Examiner—Lucy Lieberman
(74) *Attorney, Agent, or Firm*—Alex Rhodes

(57) **CLAIM**

The ornamental design for a body harness, as shown and described.

DESCRIPTION

FIG. **1** is a perspective view showing the front and left side of a body harness showing my new design.
FIG. **2** is a perspective view showing the rear and right side of the body harness; and,
FIG. **3** is an enlarged fragmentary perspective view showing a portion of the front of the body harness separately for clarity of illustration.

1 Claim, 2 Drawing Sheets

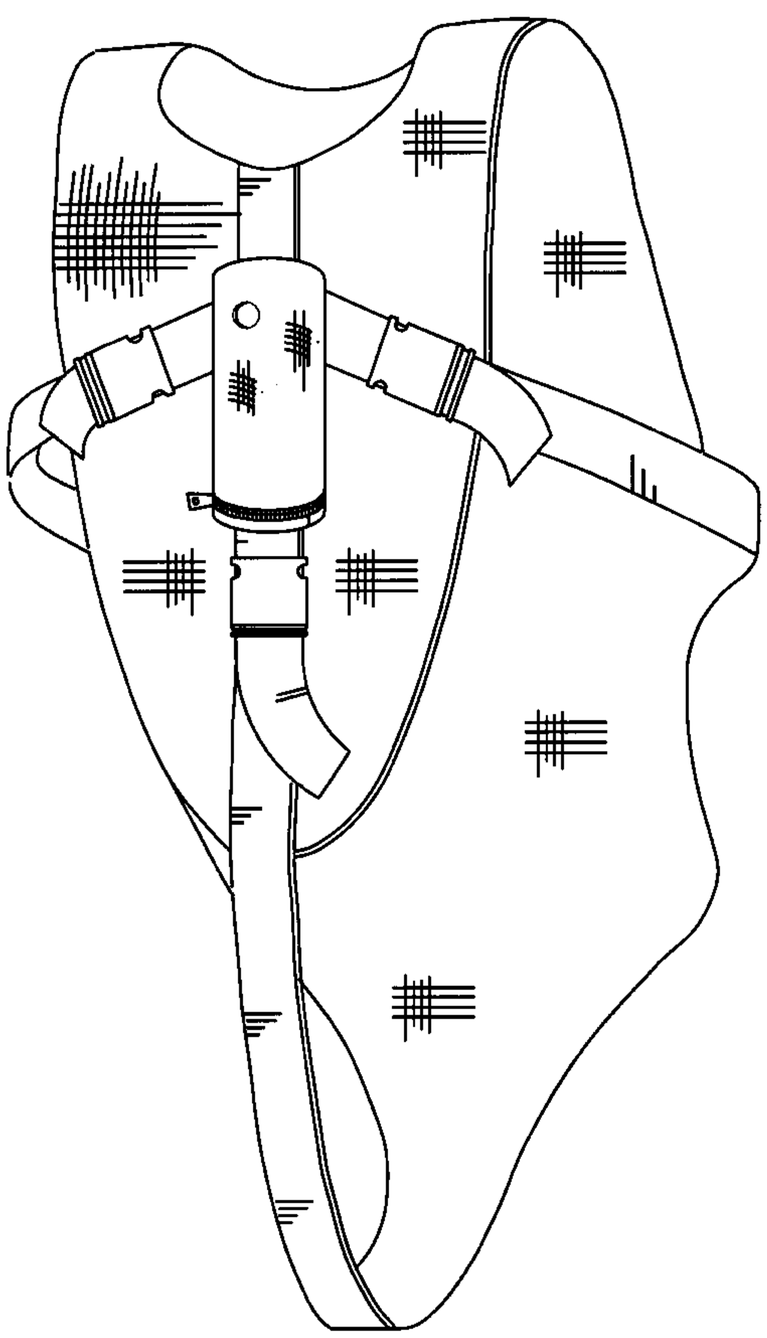

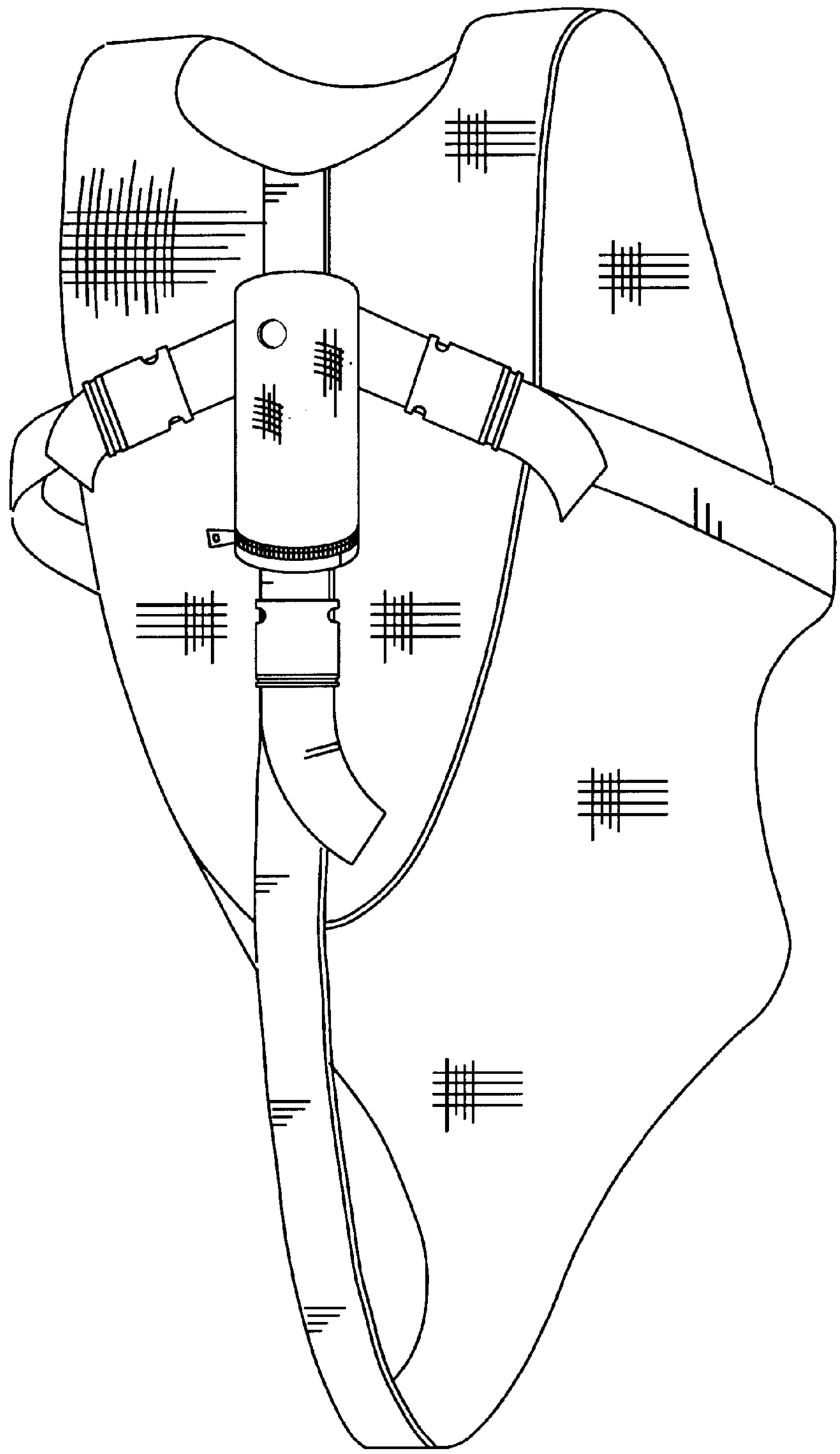

FIG. 1

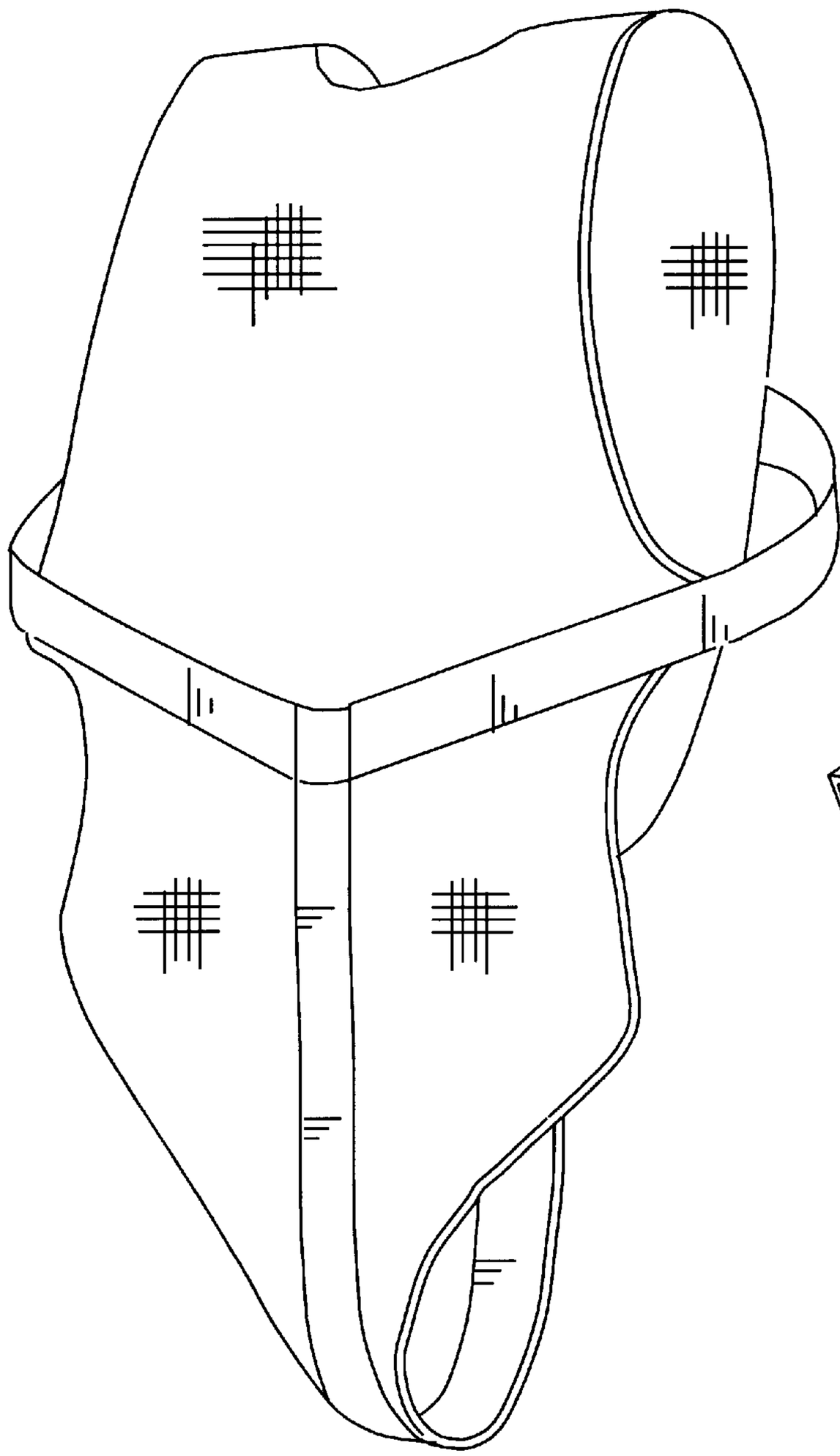

FIG. 2

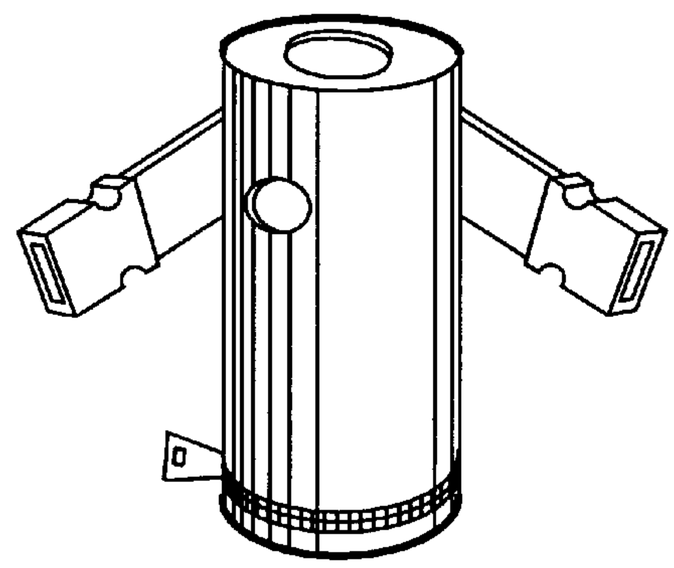

FIG. 3