US00D516262S

(12) United States Design Patent

Cowdery

(10) Patent No.: US D516,262 S
(45) Date of Patent: ** Feb. 28, 2006

(54) **APPLICATOR**

(76) Inventor: **Dean J. Cowdery**, 6410 Oxford St., St. Louis Park, MN (US) 55426

(**) Term: **14 Years**

(21) Appl. No.: **29/179,519**

(22) Filed: **Apr. 11, 2003**

(51) **LOC (8) Cl.** **04-01**
(52) **U.S. Cl.** **D32/50**
(58) **Field of Classification Search** D4/122, D4/123, 137; D32/40, 50, 51; 15/209.1, 210.1, 15/220.1, 223, 226, 228, 230, 230.11, 230.12, 15/230.14, 235; 492/28, 29
See application file for complete search history.

(56) **References Cited**

U.S. PATENT DOCUMENTS

2,662,269 A * 12/1953 Nash ..... 15/230.11 X
2,756,449 A * 7/1956 Dewey ..... 15/235 X
4,152,807 A * 5/1979 Smahlik ..... 15/210.1 X
5,492,425 A * 2/1996 Carter et al.
6,148,469 A * 11/2000 Irven 15/230.11

* cited by examiner

Primary Examiner—Alan P. Douglas
Assistant Examiner—Lavone D. Tabor
(74) *Attorney, Agent, or Firm*—Richard O. Bartz; R. John Bartz

(57) **CLAIM**

I claim the ornamental design for an applicator, as shown and described.

DESCRIPTION

FIG. **1** is a perspective view of the applicator of my new design;

FIG. **2** is a top plan view thereof, shown broken away for ease of illustration;

FIG. **3** is a side view of FIG. **2**, the opposite side being a mirror Image;

FIG. **4** is a bottom plan view of FIG. **2**;

FIG. **5** is enlarged end elevational view of FIG. **1**, the opposite end being a mirror image thereof; and,

FIG. **6** is an enlarged sectional view taken along line **6—6** of FIG. **2**.

1 Claim, 2 Drawing Sheets

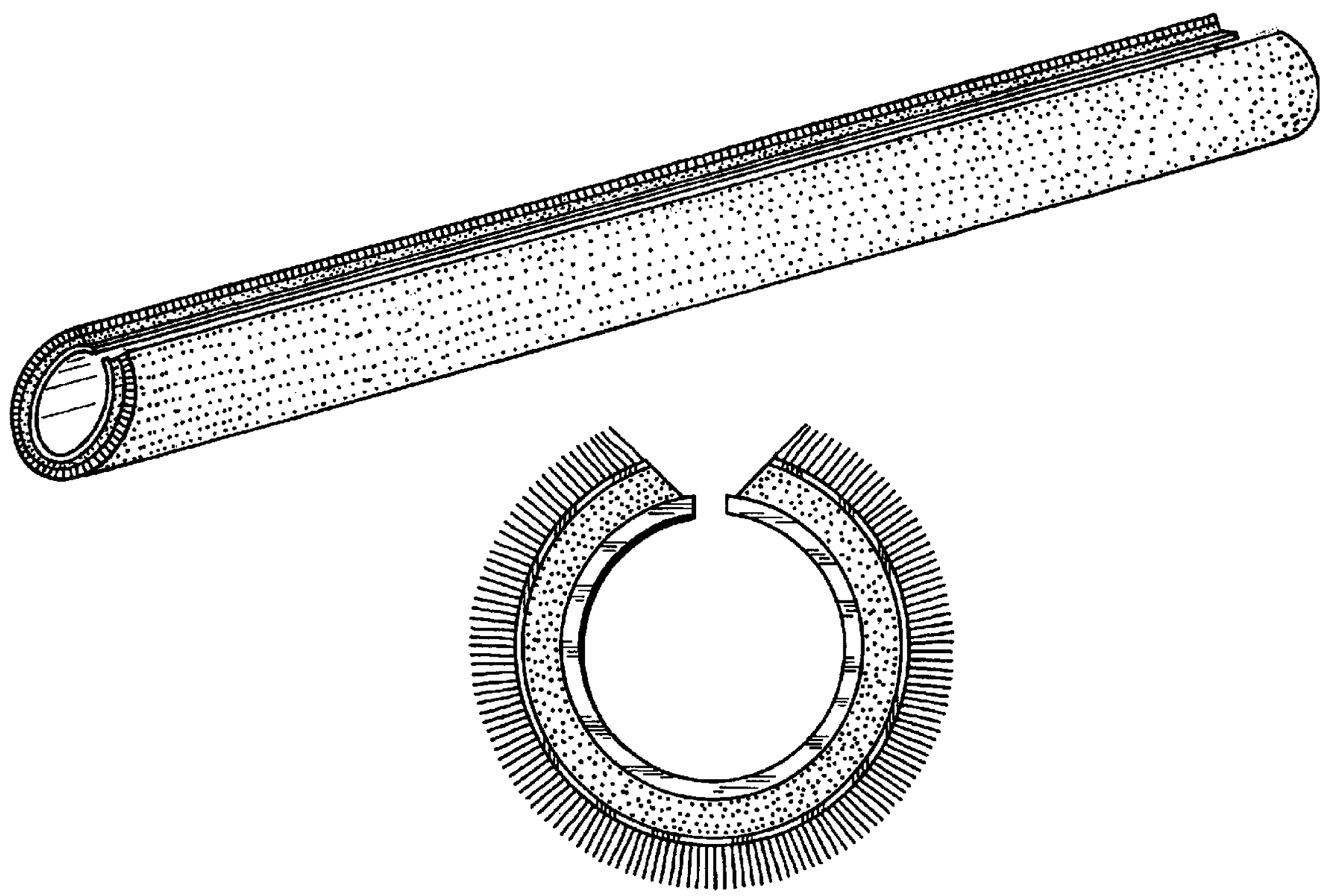

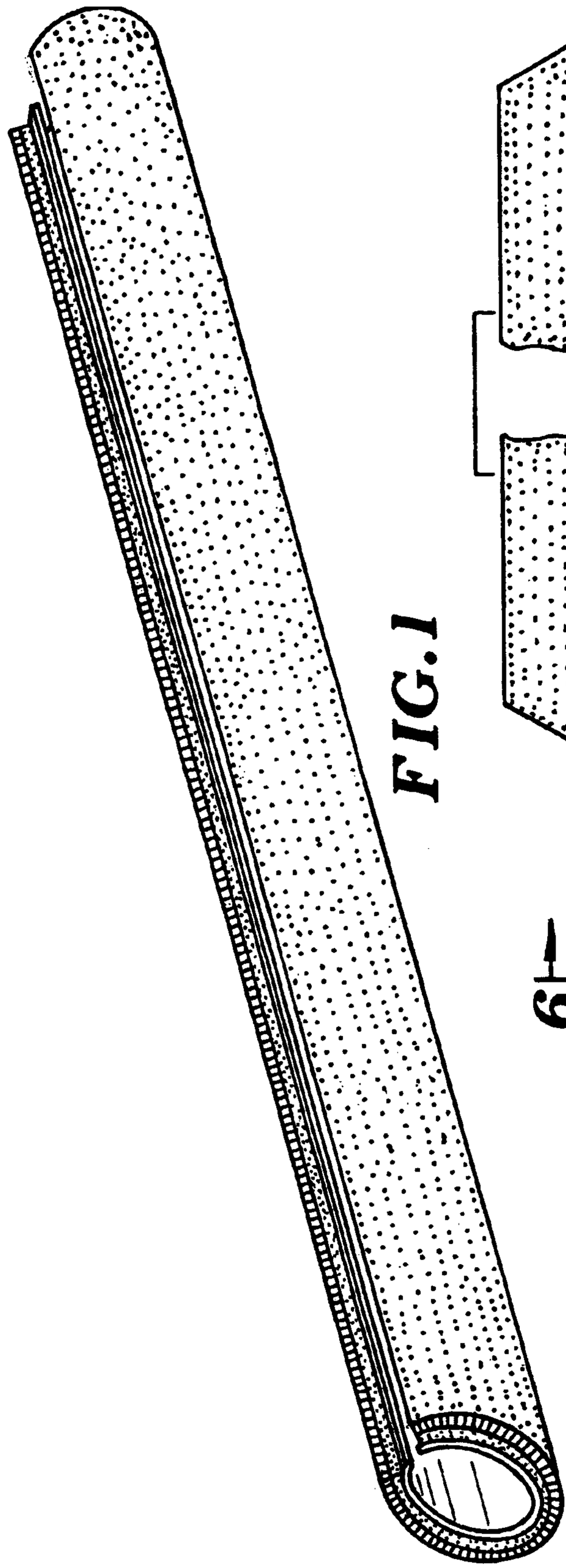

FIG.1

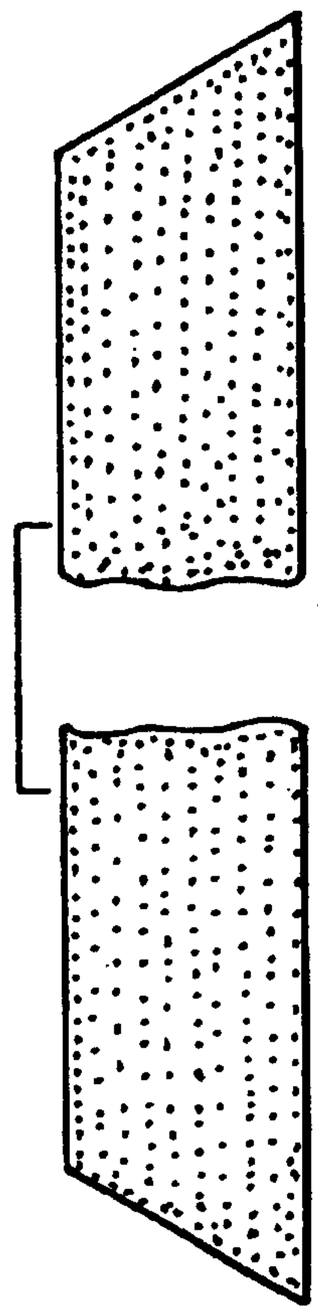

FIG.3

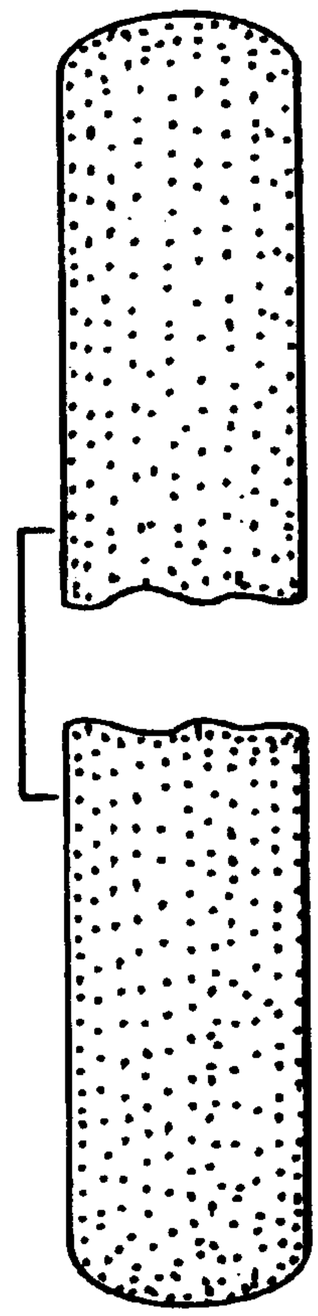

FIG.4

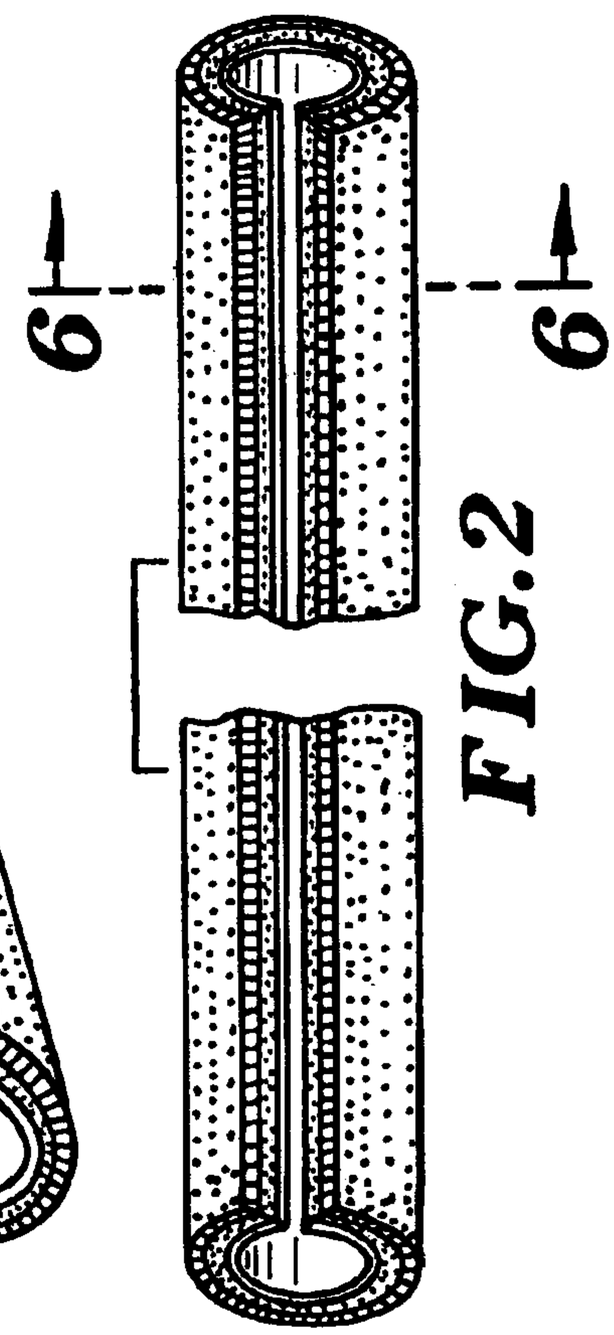

FIG.2

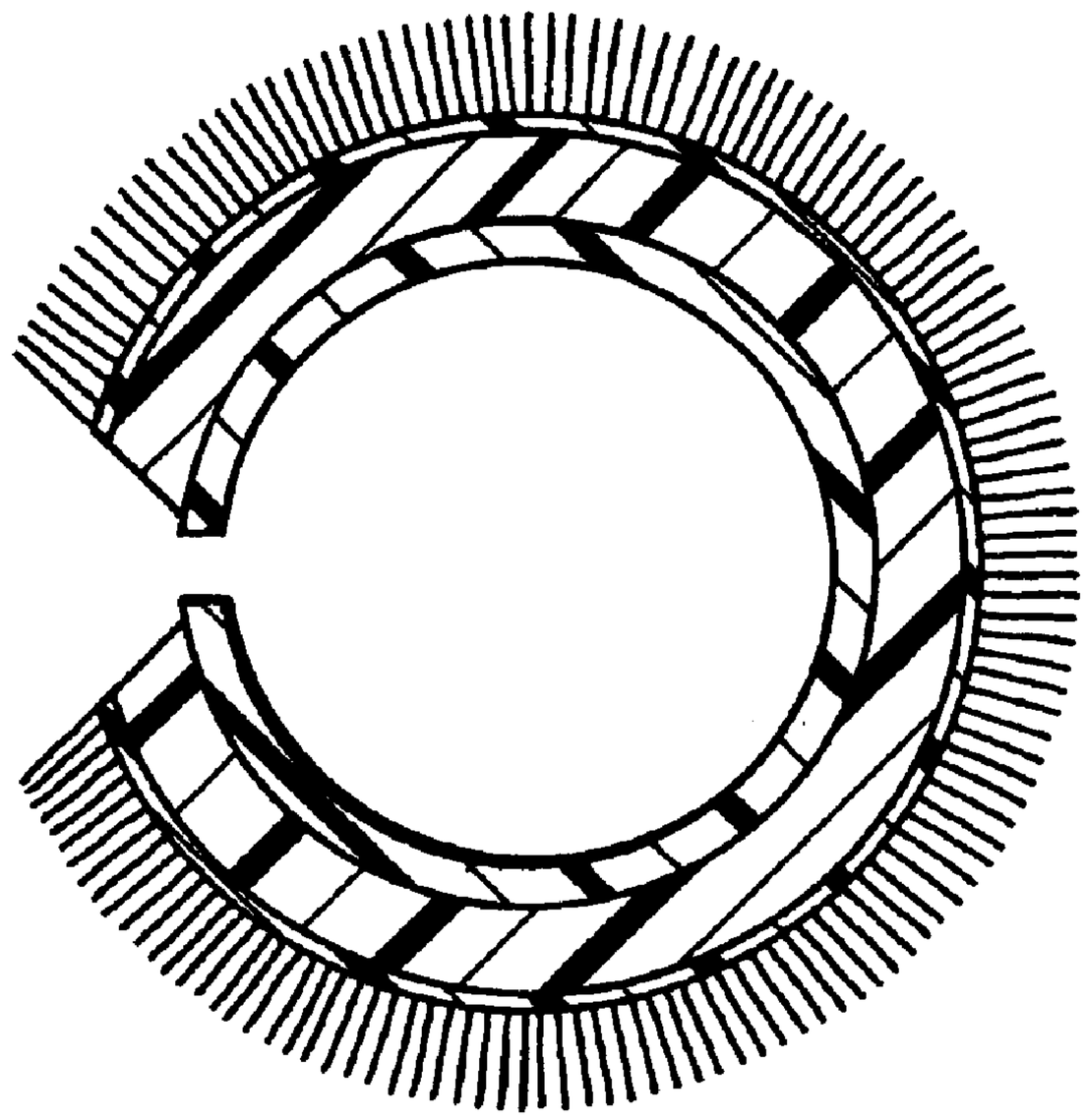

FIG. 6

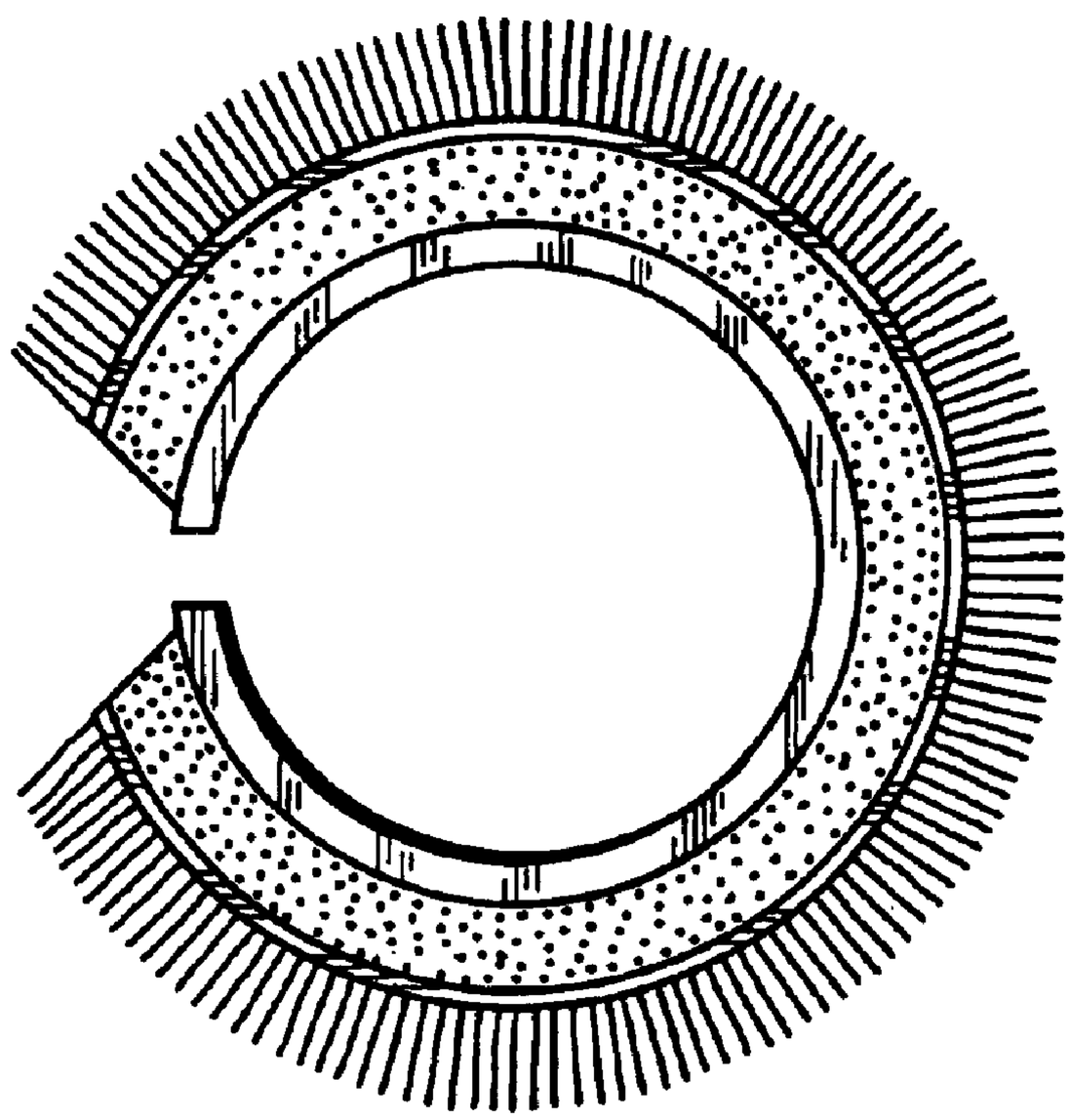

FIG. 5