US00D515521S

(12) United States Design Patent

Stewart et al.

(10) Patent No.: US D515,521 S
(45) Date of Patent: ** Feb. 21, 2006

(54) **EXTERIOR OF AN ELECTRIC MACHINE HOUSING**

(75) Inventors: **William P. Stewart**, Saint Peters, MO (US); **Donald J. Williams**, Pierron, IL (US)

(73) Assignee: **Emerson Electric Co.**, St. Louis, MO (US)

(**) Term: **14 Years**

(21) Appl. No.: **29/214,510**

(22) Filed: **Oct. 4, 2004**

(51) **LOC (8) Cl.** **13-03**
(52) **U.S. Cl.** **D13/184**
(58) **Field of Classification Search** D13/184; 174/50, 52.1; 310/89; 361/600, 601, 679, 361/724, 796
See application file for complete search history.

(56) **References Cited**

U.S. PATENT DOCUMENTS

5,638,796	A		6/1997	Adams, III et al.	
5,861,689	A	*	1/1999	Snider et al.	310/71
6,046,519	A	*	4/2000	Hanazumi et al.	310/49 R
6,246,140	B1	*	6/2001	Horng	310/91
6,278,206	B1	*	8/2001	Yockey et al.	310/71
6,462,443	B1	*	10/2002	Horng	310/68 B
6,465,921	B1	*	10/2002	Horng et al.	310/81
6,507,494	B1	*	1/2003	Hutchison et al.	361/704
6,651,633	B1		11/2003	Jones	
2002/0167237	A1	*	11/2002	Horng et al.	310/81
2003/0117030	A1	*	6/2003	Agnes et al.	310/89
2004/0012285	A1	*	1/2004	Buening et al.	310/89
2004/0169429	A1	*	9/2004	Howe et al.	310/89

OTHER PUBLICATIONS

Design of a High Speed Switched Reluctance Machine for Automotive Turbo–Generator Applications; S.D. Calverly, et al; University of Sheffield; SAE Technical Paper Series 1999–01–2933; Aug. 17–19, 1999, pp. 1–10.

Aerodynamic Losses in Switched Reluctance Machines; S.D. Calverley, et al; IEE Proc.–Electr. Power Appl., vol. 147, No. 6, Nov. 2000; pp. 443–448.

Visteon Partners in Technology; European Automotive Design; Oct. 2002; pp. 30–43.

U.S. Appl. No. 10/958,196 for Apparatus and Methods of Retaining a Stator Within a Housing of an Electric Machine filed Oct. 4, 2004, Stewart.

U.S. Appl. No. 10/958,198 for Electric Machines and Methods Related to Assembling Electric Machines, filed Oct. 4, 2004, Stewart et al.

U.S. Appl. No. 10/958,199 for Bearing Systems for Electric Machines, filed Oct. 4, 2004, Stewart et al.

U.S. Appl. No. 10/958,213 for Electric Machines and Methods Related to Assembling Electrical Machines, filed Oct. 4, 2004, Stewart et al.

U.S. Appl. No. 10/958,214 for Electric Machine with Power and Control Electronics Integrated into the Primary Machine Housing, filed Oct. 4, 2004, Stewart et al.

U.S. Appl. No. 10/958,215 for Stator End Caps and Methods for Positioning the Lead and Exit Ends of the Stator Windings, filed Oct. 4, 2004, Stewart et al.

* cited by examiner

Primary Examiner—Stella Reid
Assistant Examiner—Selina Sikder
(74) *Attorney, Agent, or Firm*—Harness, Dickey & Pierce, P.L.C.

(57) **CLAIM**

The ornamental design for an exterior of an electric machine housing, as shown and described.

DESCRIPTION

FIG. **1** is a perspective view of the exterior of an electric machine housing; and,

FIG. **2** is an elevation view thereof.

The details shown in broken lines are for illustrative purposes only and form no part of the claimed design.

1 Claim, 2 Drawing Sheets

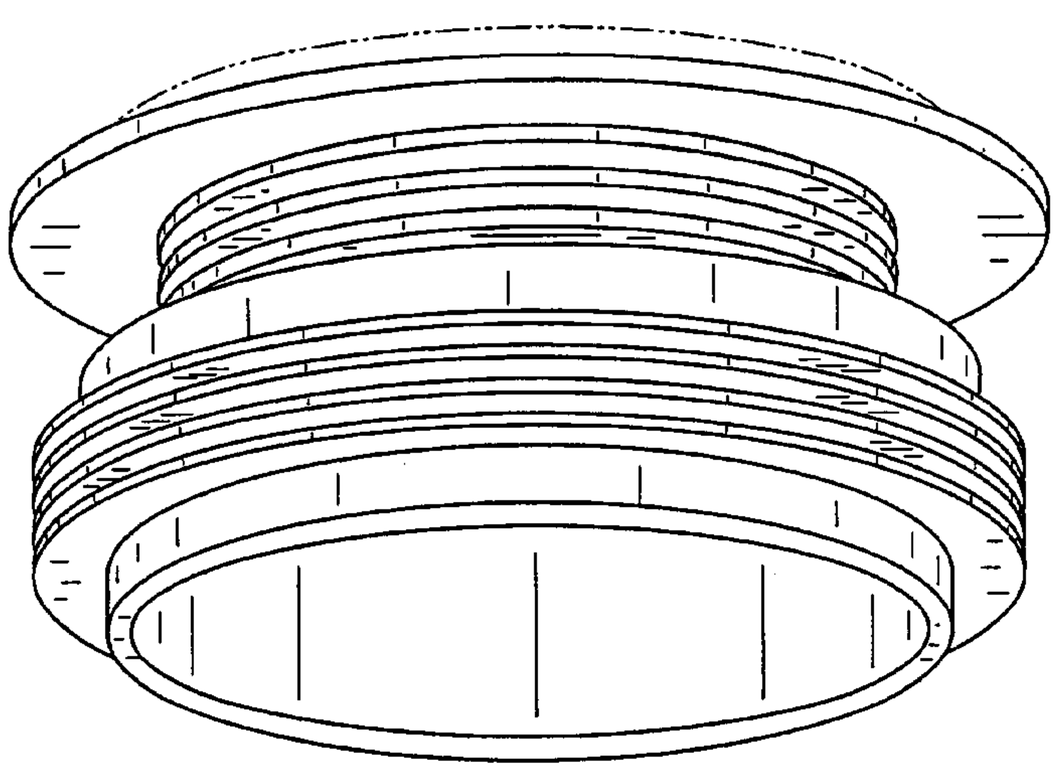

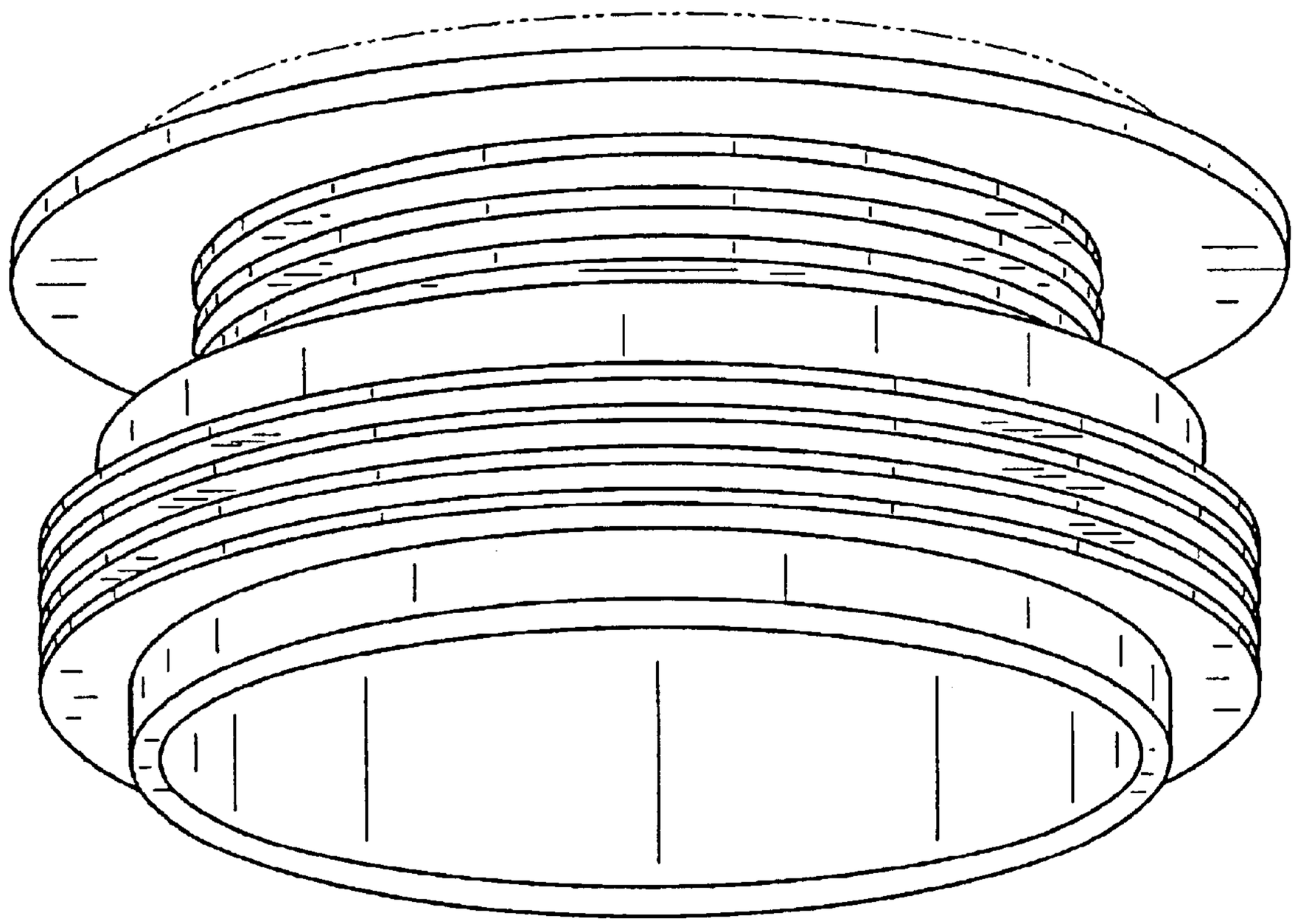

FIG. 1

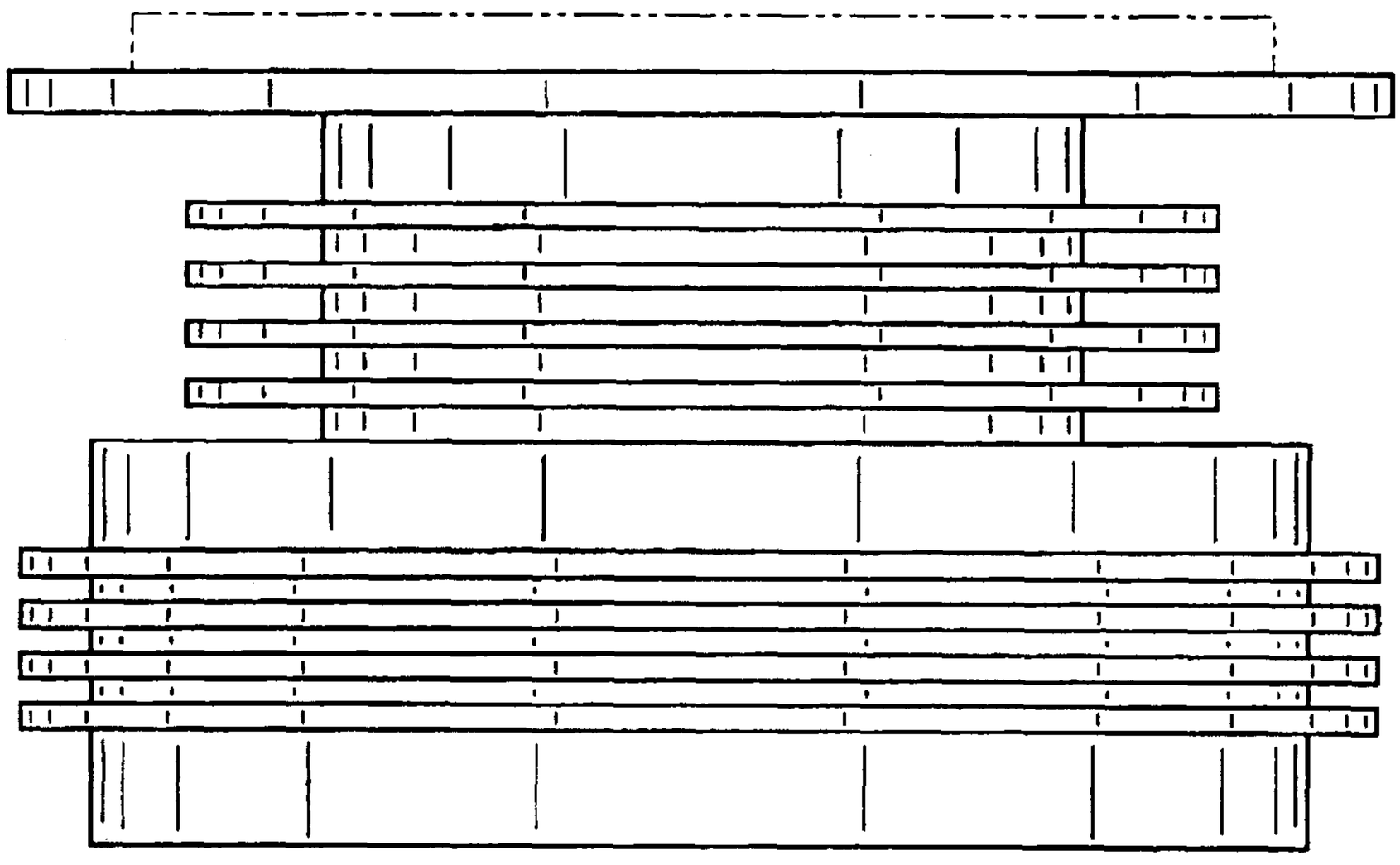

FIG. 2