US00D512799S

(12) United States Design Patent

Simpson et al.

(10) Patent No.: US D512,799 S
(45) Date of Patent: ** Dec. 13, 2005

(54) **PET HOME**

(76) Inventors: **Jeffrey M. Simpson**, 381 Oak Ridge Dr., Auburn, AL (US) 36832; **Mark A. Haley**, 140 Washington Rd., Asheville, NC (US) 28801

(**) Term: **14 Years**

(21) Appl. No.: **29/203,474**

(22) Filed: **Apr. 14, 2004**

(51) **LOC (6) Cl.** **30-02**
(52) **U.S. Cl.** **D30/108**
(58) **Field of Search** D30/108–112, D30/114–119, 158, 160, 161; 119/161–170, 28.5, 246, 453, 474, 482, 485, 496–499, 501, 706, 847

(56) **References Cited**

U.S. PATENT DOCUMENTS

989,029	A		4/1911	Newcomb	
2,079,458	A		5/1937	Leichtfuss	
2,170,379	A		8/1939	Ortt	
D168,650	S	*	1/1953	McKee	D30/109
2,678,628	A	*	5/1954	Williams	119/496
2,789,531	A		4/1957	Diefendorf	
2,892,562	A		6/1959	Smithson	
D193,769	S	*	10/1962	Kerr	D30/109
4,224,899	A		9/1980	Cruchelow et al.	
4,256,056	A		3/1981	Sou	
4,484,540	A	*	11/1984	Yamamoto	119/497
4,527,512	A		7/1985	Sugiura	
D282,880	S	*	3/1986	Barati	D30/114
D287,650	S		1/1987	Braeuner	
4,696,259	A		9/1987	Fewox	
4,762,085	A		8/1988	Ondrasik	
4,989,546	A		2/1991	Cannaday	
5,078,096	A	*	1/1992	Bishop et al.	119/497
5,154,137	A	*	10/1992	Stanaland	119/496
5,167,202	A		12/1992	Bradford et al.	
5,203,281	A		4/1993	Harwich	
5,357,900	A	*	10/1994	Ho	119/479
5,469,807	A		11/1995	Kosmaczeska	
5,626,098	A		5/1997	Askins et al.	
5,649,500	A		7/1997	Klavemann et al.	
D382,374	S		8/1997	Burks	
5,669,331	A		9/1997	Richmond	
5,890,455	A		4/1999	Donchey	
5,943,982	A		8/1999	Askins et al.	
5,960,744	A		10/1999	Rutman	
5,967,090	A		10/1999	Hui	
D426,680	S	*	6/2000	Morley	D30/119
D427,730	S		7/2000	Powers et al.	
6,131,534	A		10/2000	Axelrod	
6,192,834	B1		2/2001	Kolozsvari	
D442,748	S		5/2001	Farrugia	
D445,222	S	*	7/2001	Ross	D30/108
6,318,294	B1		11/2001	Richmond et al.	
6,354,245	B1		3/2002	Roddy et al.	
6,446,577	B1	*	9/2002	Salahor	119/497
6,460,486	B1	*	10/2002	Powers et al.	119/452

(Continued)

FOREIGN PATENT DOCUMENTS

GB	2 238 296 A	5/1991

Primary Examiner—Cathy Anne MacCormac
(74) *Attorney, Agent, or Firm*—Gardner Groff, P.C.

(57) **CLAIM**

The ornamental design for a pet home, as shown and described.

DESCRIPTION

FIG. **1** is a perspective view of a pet home according to the design;

FIG. **2** is a front view thereof;

FIG. **3** is a rear view thereof;

FIG. **4** is a side view thereof, the opposing side is a mirror image;

FIG. **5** is a top view thereof; and,

FIG. **6** is a bottom view thereof.

Portions of the structure represented in the drawings by broken lines are not considered part of the claimed design.

1 Claim, 4 Drawing Sheets

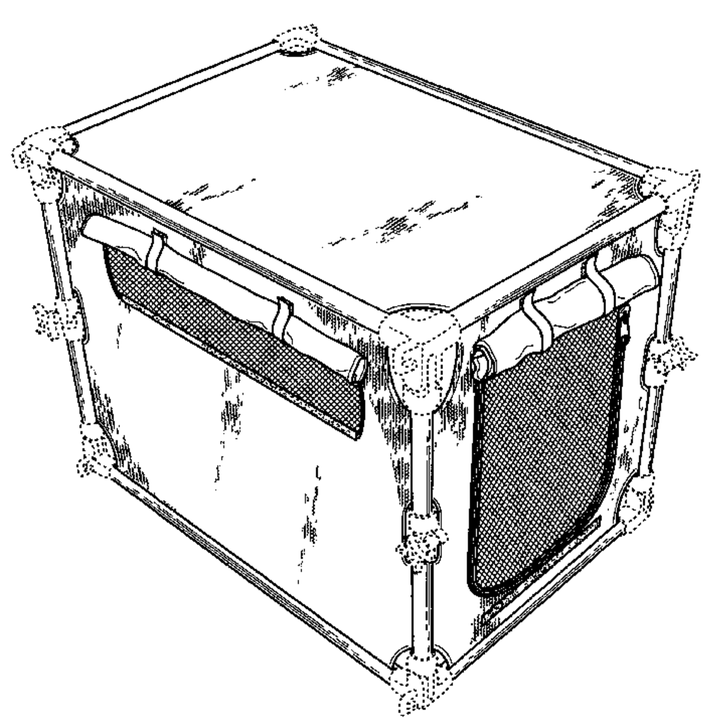

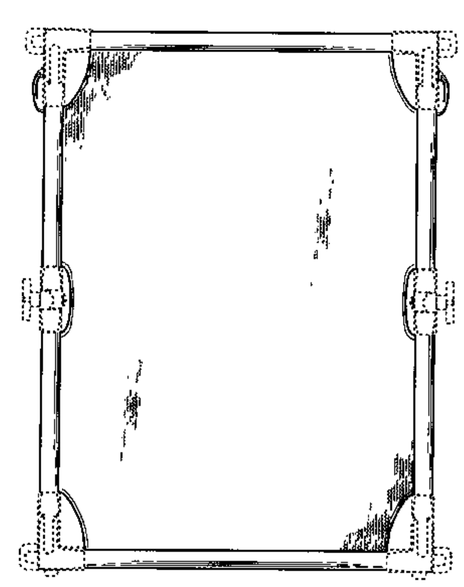

U.S. PATENT DOCUMENTS

6,581,545 B1 * 6/2003 Foster 119/482
D483,156 S 12/2003 Simpson
6,715,446 B2 * 4/2004 Chou 119/497
6,832,580 B2 * 12/2004 Marchioro D30/114

* cited by examiner

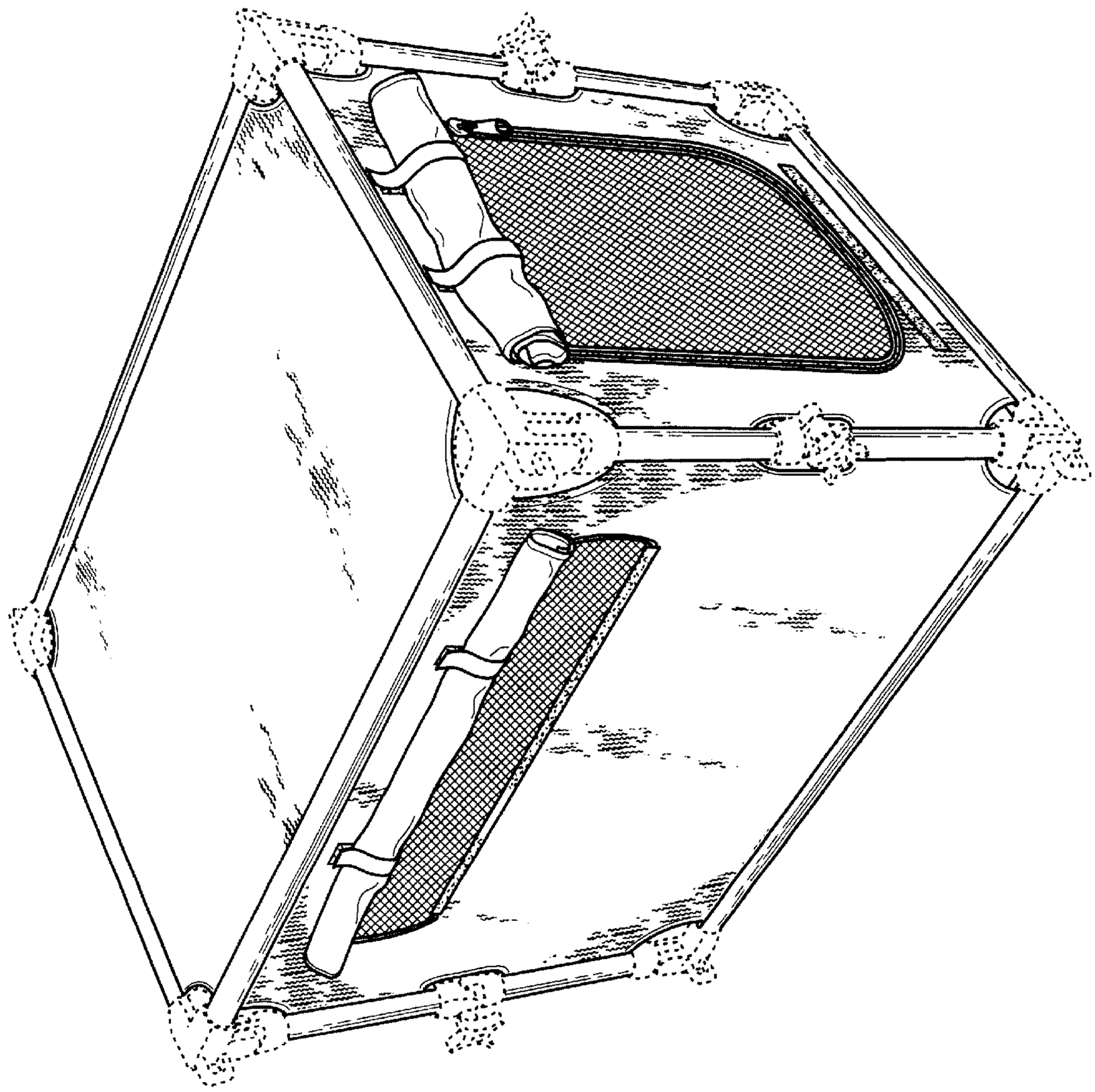

Fig. 1

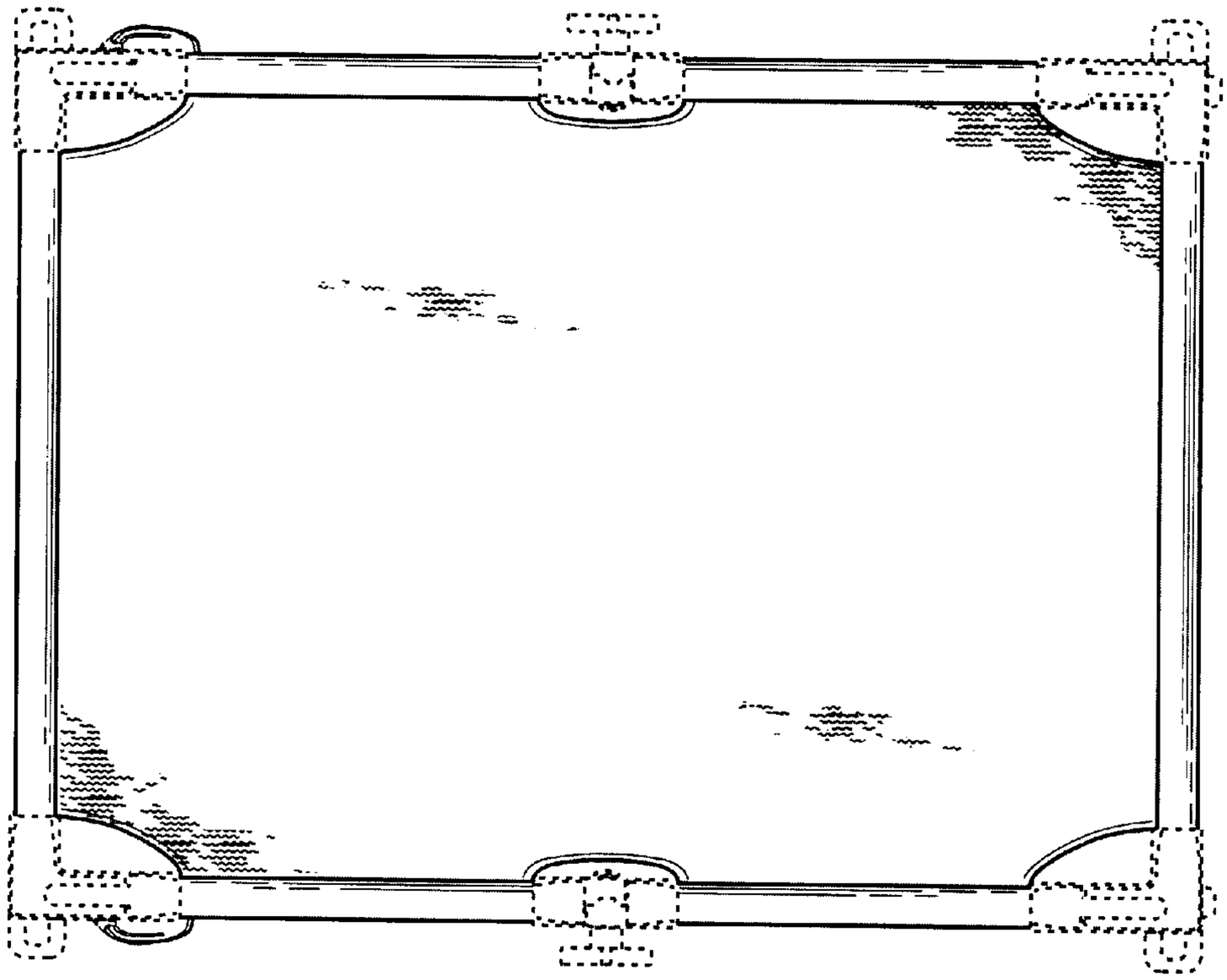

Fig. 1

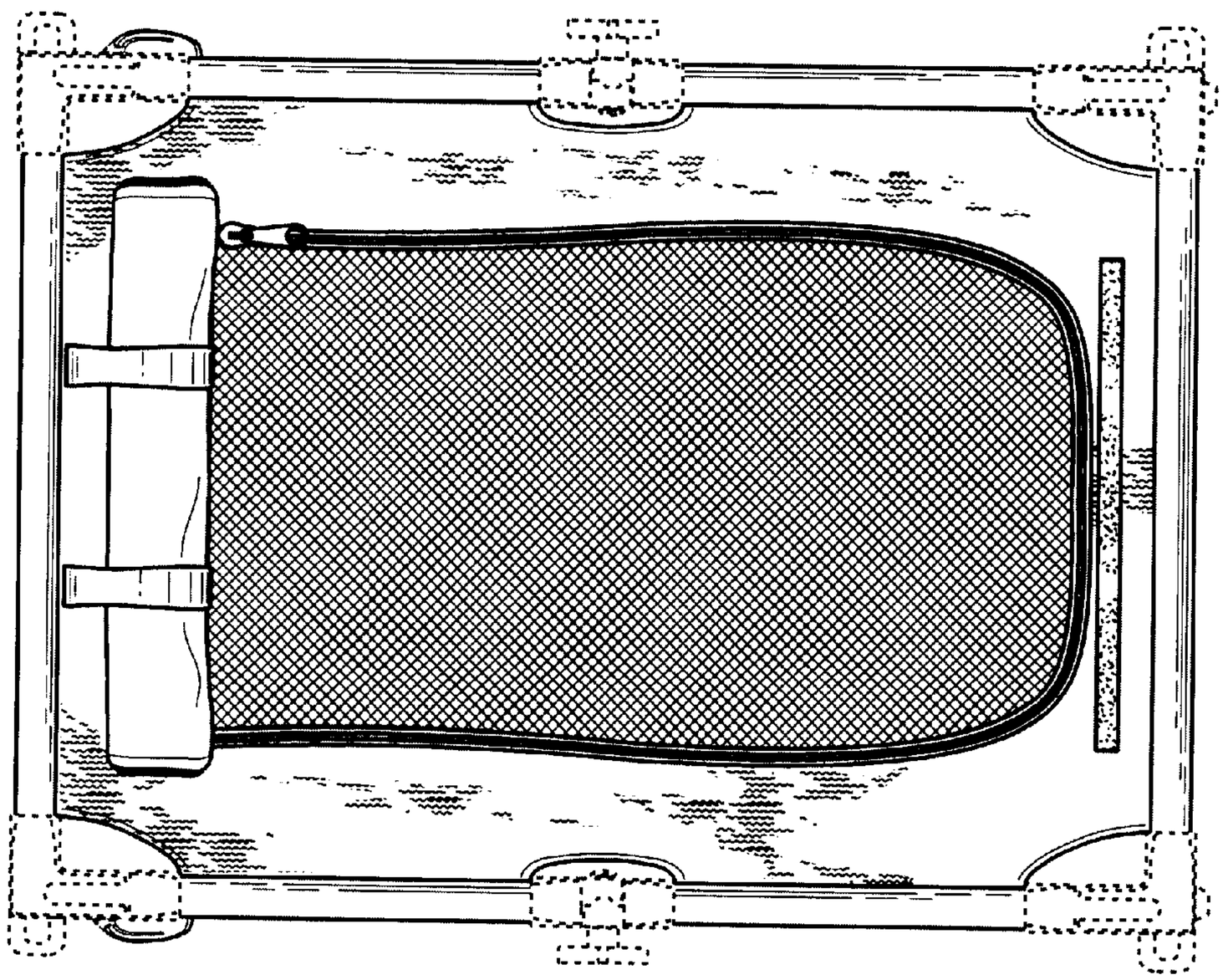

Fig. 2

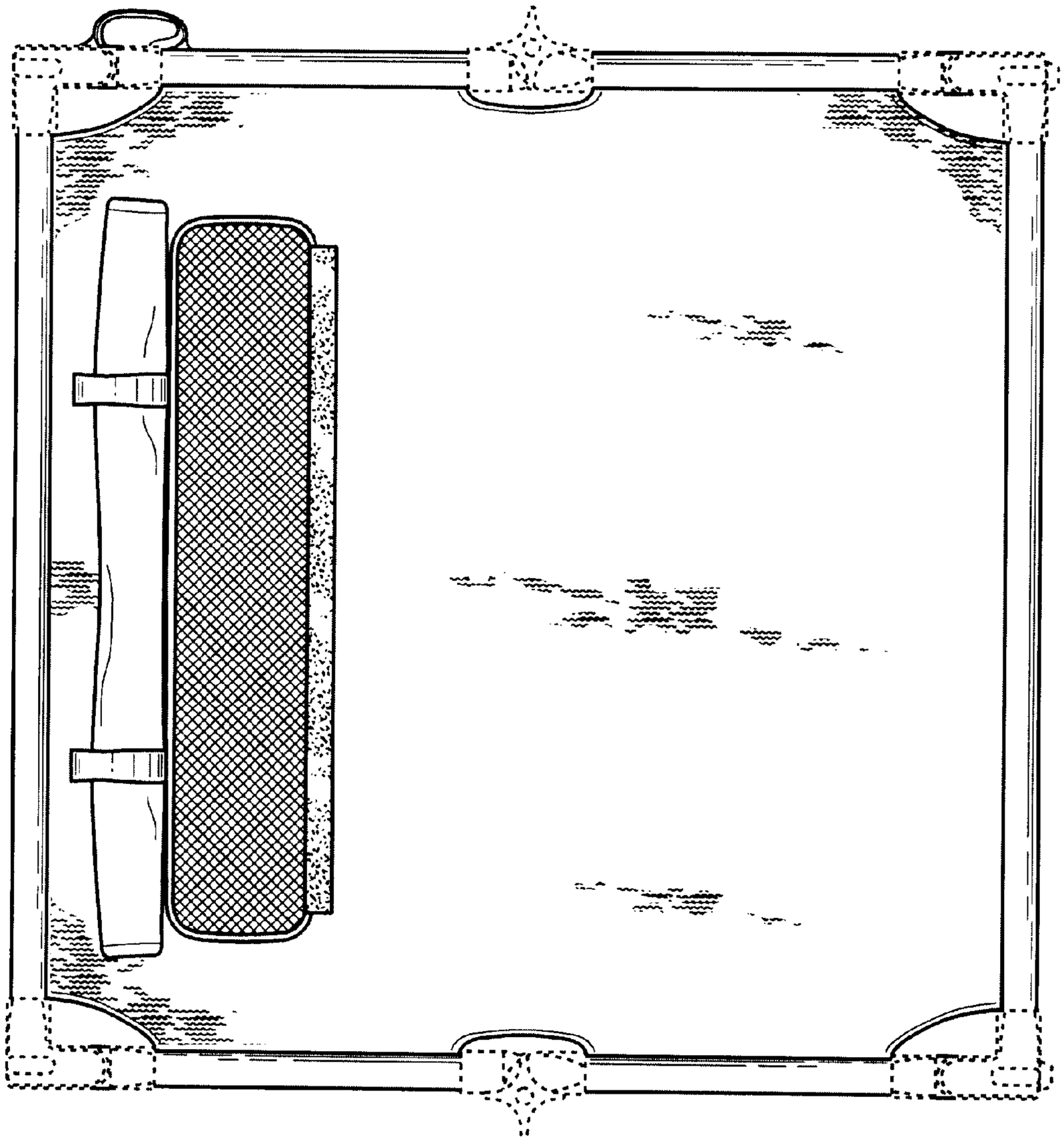

Fig. 4

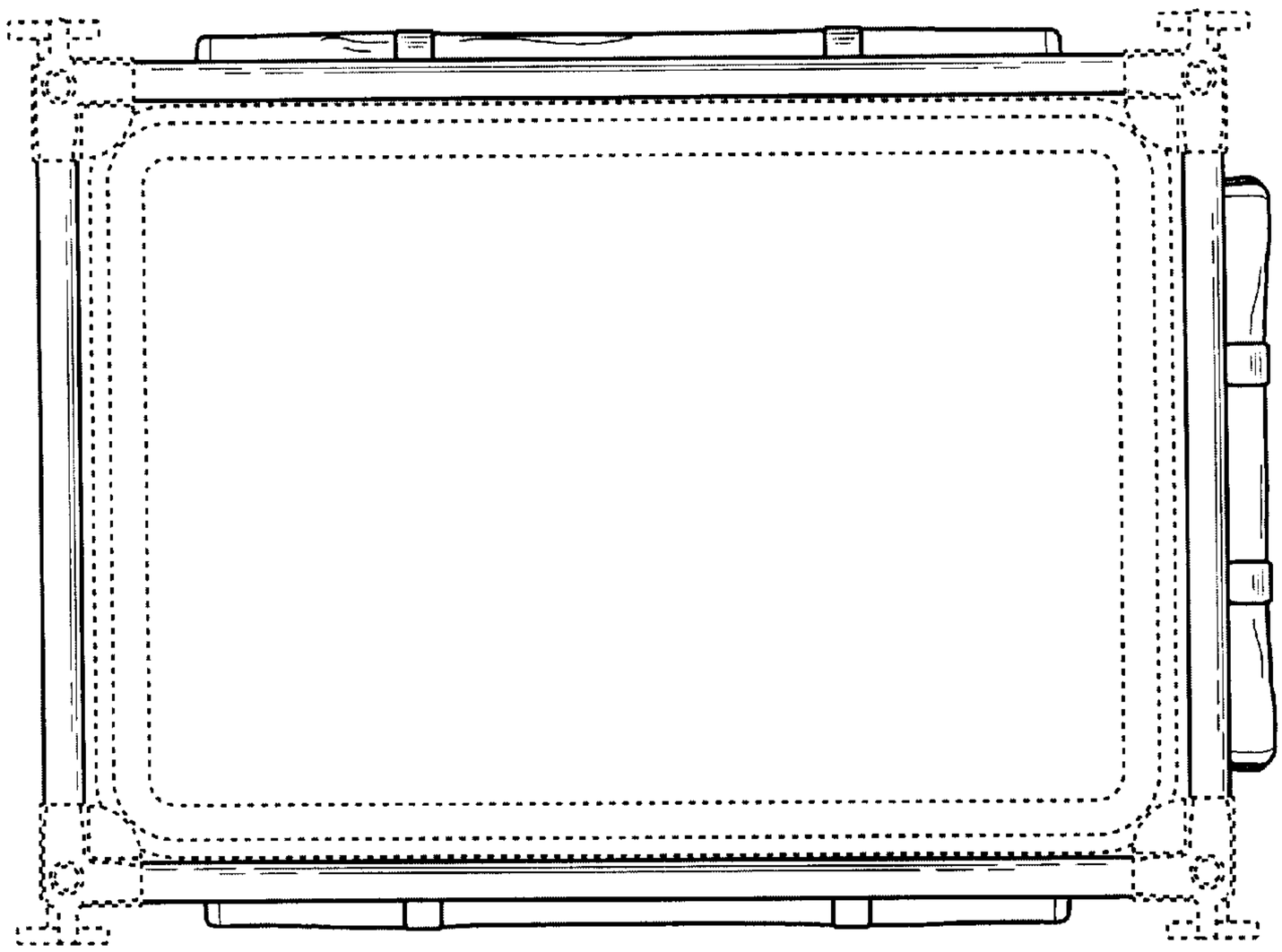

Fig. 6

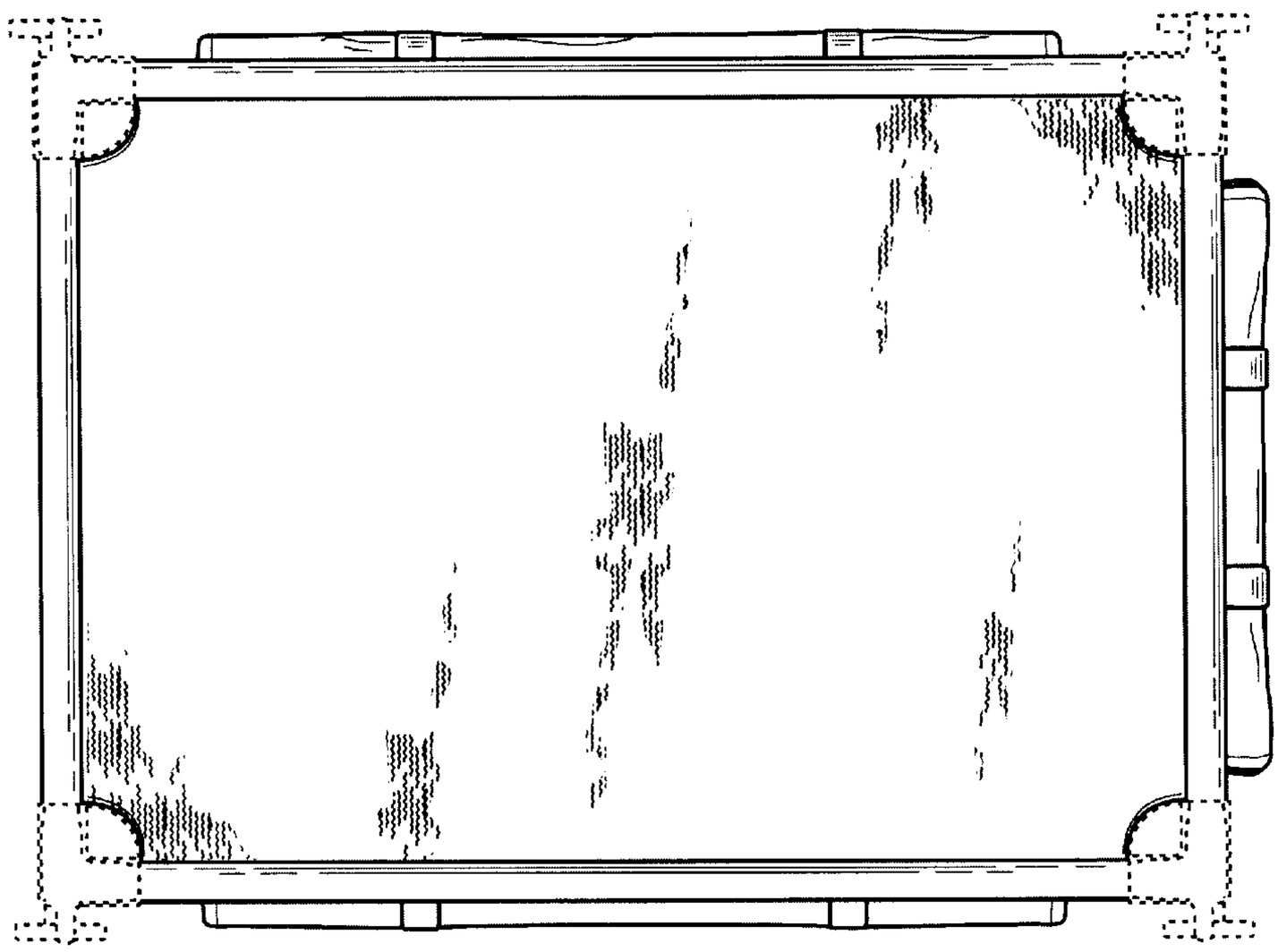

Fig. 5